CITY OF WINDOM, MINNESOTA

2017 WASTEWATER TREATMENT FACILITY IMPROVEMENTS

CONTRACT DRAWINGS

2017

BOLTON & MENK

www.bolton-menk.com

MANKATO, MINNESOTA

I HEREBY CERTIFY THAT THIS PLAN, SPECIFICATION OR REPORT WAS PREPARED BY ME OR UNDER MY DIRECT SUPERVISION, AND THAT I AM A DULY LICENSED PROFESSIONAL ENGINEER UNDER THE LAWS OF THE STATE OF MINNESOTA

SIGNATURE Tejpal S. Bala

TYPED OR PRINTED NAME Tejpal Singh Bala

DATE 12/4/2017 REG. NO. 49574

© Bolton & Menk, Inc. 2017, All Rights Reserved
H:\WIND\T22113672\CAD\ENV\113672_D_BASE_101-TITLE.DWG 12/7/2017 7:05:37 PM

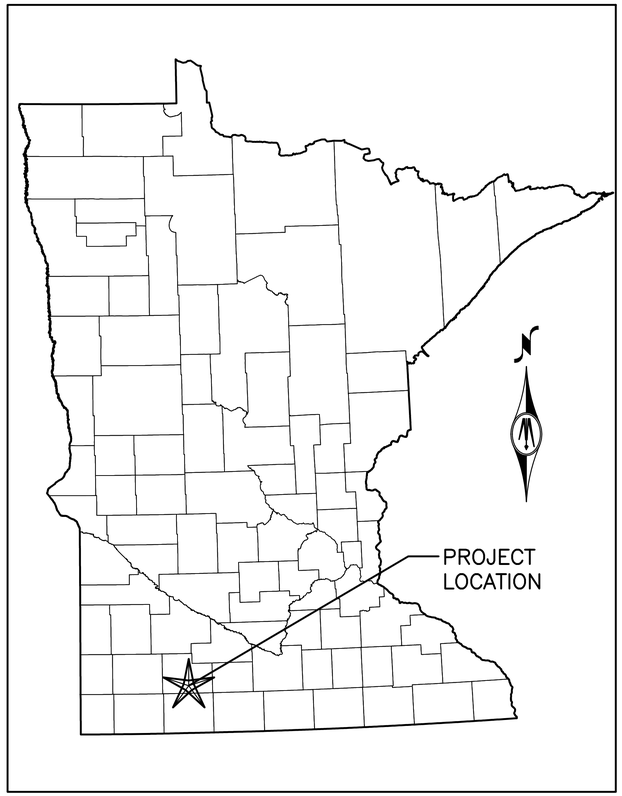

VICINITY MAP

NO SCALE

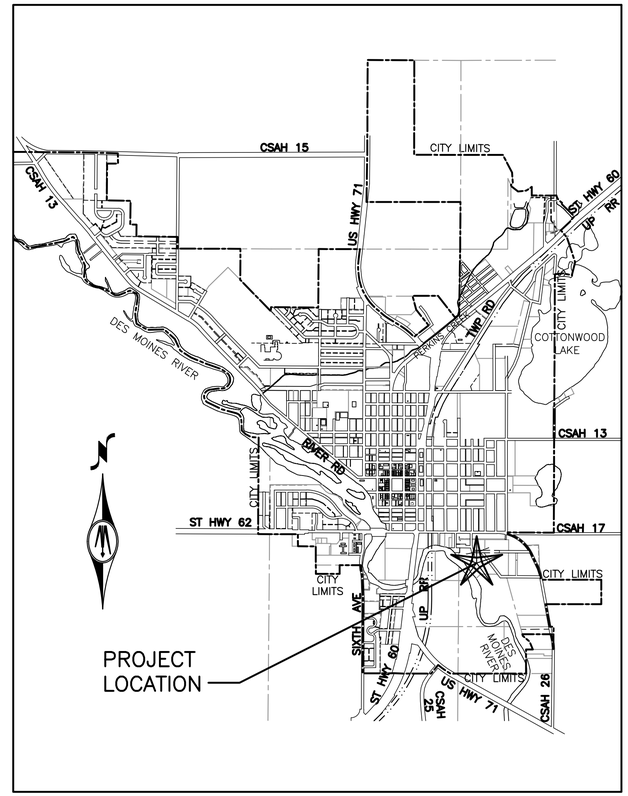

LOCATION MAP

NO SCALE

SHEET INDEX

1.01 TITLE SHEET
1.02 VICINITY MAP, LOCATION MAP AND SHEET INDEX
1.03 ABBREVIATIONS
1.04 LEGEND
1.05 HYDRAULIC PROFILE
1.06 DESIGN DATA
1.07 STANDARD DETAILS
1.08 STANDARD DETAILS
1.09 STANDARD DETAILS
1.10 STANDARD DETAILS
1.11 STANDARD DETAILS
1.12 STANDARD DETAILS

2.01 EXISTING SITE PLAN
2.02 EXISTING SITE PIPING PLAN
2.03 STORM WATER POLLUTION PREVENTION PLAN PROJECT LOCATION MAP
2.04 STORM WATER POLLUTION PREVENTION PLAN NARRATIVE
2.05 STORM WATER POLLUTION PREVENTION PLAN SITE & SOILS MAP
2.06 PROPOSED SITE DEMOLITION AND REMOVALS PLAN
2.07 PROPOSED SITE PLAN
2.08 PROPOSED SITE PIPING PLAN
2.09 CURED-IN-PLACE PIPE IMPROVEMENT – PLAN
2.10 CURED-IN-PLACE PIPE IMPROVEMENT – PLAN
2.11 CURED-IN-PLACE PIPE IMPROVEMENT – PLAN
2.12 CURED-IN-PLACE PIPE IMPROVEMENT – PLAN
2.13 CURED-IN-PLACE PIPE IMPROVEMENT – PLAN

3.01 STRUCTURAL NOTES
3.02 STANDARD DETAILS
3.03 PRETREATMENT BUILDING – FOUNDATION PLAN
3.04 PRETREATMENT BUILDING – PLAN & SECTIONS
3.05 PRETREATMENT BUILDING – PLANS
3.06 PRETREATMENT BUILDING – WALL PLAN
3.07 PRETREATMENT BUILDING – UPPER ROOF PLAN
3.08 PRETREATMENT BUILDING – SECTIONS
3.09 PRETREATMENT BUILDING – SECTIONS
3.10 PRETREATMENT BUILDING – SECTIONS
3.11 PRETREATMENT BUILDING – SECTIONS
3.12 ANAEROBIC BASIN – WALL PLAN
3.13 ANAEROBIC BASIN – PLANS
3.14 ANAEROBIC BASIN – SECTIONS
3.15 ANAEROBIC BASIN – SECTIONS
3.16 ANAEROBIC BASIN – PLANS & SECTIONS
3.17 ANAEROBIC BASIN – PLANS & SECTIONS
3.18 RAPID MIX STRUCTURE – PLANS & SECTIONS
3.19 FILTER BUILDING – PLAN
3.20 FILTER BUILDING – SECTIONS
3.21 CHLORINE CONTACT BASIN – PLANS
3.22 CHLORINE CONTACT BASIN – SECTIONS
3.23 CHLORINE CONTACT BASIN – SECTIONS
3.24 POST-AERATION BASIN – PLAN & SECTIONS
3.25 BIOSOLIDS STORAGE TANK – FOUNDATION PLAN
3.26 BIOSOLIDS STORAGE TANK – ENLARGED WALL PLANS
3.27 BIOSOLIDS STORAGE TANK – SECTIONS
3.28 BIOSOLIDS STORAGE TANK – SECTIONS
3.29 BIOSOLIDS STORAGE TANK – SECTIONS

4.01 CODE ANALYSIS & LIFE SAFTEY PLAN(S)
4.02 MAIN LEVEL ARCHITECTURAL FLOOR PLAN
4.03 UPPER LEVEL ARCHITECTURAL FLOOR PLAN & SCHEDULES
4.04 ARCHITECTURAL ROOF PLAN
4.05 EXTERIOR ELEVATIONS
4.06 ARCHITECTURAL BUILDING SECTIONS
4.07 ARCHITECTURAL DETAILS

5.01 PROCESS FLOW DIAGRAM
5.02 PROCESS FLOW DIAGRAM
5.03 PROCESS FLOW DIAGRAM
5.04 EIXSTING SLUDGE HOLDING TANKS AND EXISTING CHLORINE CONTACT BASIN – DEMOLITION PLANS & SECTIONS
5.05 EXISTING PRETREATMENT BUILDING DEMOLITION PLANS AND SECTIONS
5.06 EXISTING PRETREATMENT BUILDING DEMOLITION SECTIONS
5.07 PRETREATMENT BUILDING – PLAN
5.08 PRETREATMENT BUILDING – SECTIONS
5.09 PRETREATMENT BUILDING – SECTIONS
5.10 ANAEROBIC BASIN – PLAN
5.11 ANAEROBIC BASIN – SECTIONS
5.12 EXISTING AERATION BASIN NO. 1 – REPURPOSED TO ANOXIC BASIN
5.13 ANOXIC BASIN – SECTIONS
5.14 EXISTING AERATION BASINS NO. 2 & NO. 3 PROPOSED MODIFICATIONS
5.15 AERATION BASINS NO. 2 & NO. 3 MODIFICATIONS RAPID MIX TANK – PLAN & SECTION
5.16 EXISTING FINAL CLARIFIERS NO. 1 & NO. 2 PROPOSED MODIFICATIONS – PLANS
5.17 EXISTING FINAL CLARIFIERS NO. 1 & NO. 2 PROPOSED MODIFICATIONS – SECTIONS
5.18 EXISTING CONTROL BUILDING PUMP ROOM DEMOLITION – PLAN & SECTION
5.19 EXISTING CONTROL BUILDING BLOWER ROOM DEMOLITION – PLAN & SECTIONS
5.20 EXISTING CONTROL BUILDING PROPOSED MODIFICATIONS – PLANS
5.21 EXISTING CONTROL BUILDING PROPOSED MODIFICATIONS – SECTIONS
5.22 EXISTING FILTER BUILDING EXISTING CONDITIONS & PROPOSED MODIFICATIONS – PLANS
5.23 PROPOSED RAPID MIX STRUCTURE AND CONTROL STRUCTURE NO. 6 PLAN AND SECTIONS
5.24 EXISTING FILTER BUILDING PROPOSED MODIFICATIONS – PLAN MIXED LIQUOR LIFT STATION – PLANS
5.25 EXISTING FILTER BUILDING PROPOSED MODIFICATIONS – SECTIONS
5.26 CHLORINE CONTACT BASIN & POST AERATION TANK – PLAN & SECTIONS
5.27 EXISTING SLUDGE CONTROL BUILDING PROPOSED MODIFICATIONS – PLANS
5.28 EXISTING SLUDGE CONTROL BUILDING PROPOSED MODIFICATIONS – SECTIONS
5.29 BIOSOLIDS STORAGE TANK – PLAN
5.30 BIOSOLIDS STORAGE TANK – TOP PLAN
5.31 BIOSOLIDS STORAGE TANK – SECTIONS
5.32 BIOSOLIDS STORAGE TANK LOADOUT – PLAN & SECTION
5.33 CHEMICAL FEED SCHEMATICS
5.34 CHEMICAL FEED SCHEMATICS

6.01 SITE PLAN – EXISTING CONTROL/BLOWER BUILDING & SLUDGE CONTROL BUILDING – PLUMBING DEMOLITION
6.02 EXISTING CONTROL/BLOWER BUILDING & SLUDGE CONTROL BUILDING – PLUMBING REMODELED
6.03 NEW PRE-TREATMENT BUILDING – PLUMBING
6.04 EXISTING FILTER BUILDING – PLUMBING & NEW PRE-TREATMENT BUILDING – PLUMBING RISERS
6.05 NEW PRE-TREATMENT BUILDING – H.V.A.C.
6.06 EXISTING CONTROL/BLOWER BUILDING – H.V.A.C. DEMOLITION
6.07 EXISTING CONTROL/BLOWER BUILDING – H.V.A.C. REMODEL
6.08 EXISTING FILTER BUILDING – H.V.A.C. DEMOLITION & REMODEL
6.09 SLUDGE CONTROL BUILDING – H.V.A.C. DEMOLITION & REMODEL
6.10 H.V.A.C. DETAILS
6.11 H.V.A.C. SCHEDULES

7.01 WASTEWATER TREATMENT PLANT SITE PLAN ELECTRICAL DEMOLITION
7.02 WASTEWATER TREATMENT PLANT SITE PLAN ELECTRICAL POWER & LIGHTING
7.03 PRETREATMENT FLOOR PLAN – LIGHTING
7.04 PRETREATMENT BUILDING – ELECTRICAL POWER PLAN
7.05 ANAEROBIC BASIN – ELECTRICAL POWER PLAN
7.06 ANOXIC BASIN – ELECTRICAL POWER PLAN
7.07 FINAL CLARIFIERS DEMOLITION PLAN – ELECTRICAL
7.08 FINAL CLARIFIERS REMODEL PLAN – ELECTRICAL
7.09 EXISTING CONTROL BUILDING – ELECTRICAL DEMOLITION
7.10 CONTROL BUILDING – REMODEL PLANS – LIGHTING
7.11 CONTROL BUILDING – REMODEL PLANS – POWER
7.12 FILTER BUILDING – DEMOLITION PLANS – ELECTRICAL
7.13 FILTER BUILDING – REMODEL PLAN – LIGHTING
7.14 FILTER BUILDING – REMODEL PLAN – POWER
7.15 CHLORINE CONTACT BASIN – ELECTRICAL
7.16 SLUDGE BUILDING – UPPER & LOWER DEMOLITION – LIGHTING & POWER PLANS
7.17 SLUDGE BUILDING – UPPER & LOWER REMODEL – LIGHTING & POWER PLANS
7.18 BIOSOLIDS STORAGE TANK – ELECTRICAL POWER PLAN
7.19 AERATION/RAPID MIX PLAN – ELECTRICAL
7.20 ELECTRICAL SCHEDULES
7.21 ELECTRICAL SCHEDULES
7.22 ELECTRICAL SCHEDULES
7.23 EXISTING ELECTRICAL RISER DIAGRAM
7.24 REVISED ELECTRICAL RISER DIAGRAM
7.25 MOTOR CONTROL ELEVATIONS
7.26 SUPERVISORY CONTROL DIAGRAM SCP-B
7.27 SUPERVISORY CONTROL DIAGRAM SCP-C
7.28 SUPERVISORY CONTROL DIAGRAM SCP-D
7.29 SUPERVISORY CONTROL DIAGRAM SCP-D

SCALES SHOWN ON DRAWINGS ARE FOR 24"x36" SIZE SHEETS ONLY. DRAWINGS PLOTTED ON ANY OTHER SIZE SHEETS NEED TO HAVE SCALES ADJUSTED ACCORDINGLY

© Bolton & Menk, Inc. 2017, All Rights Reserved
H:\WIND\T22113672\CAD\ENV\113672_D_BASE_102-SHEET-INDEX.DWG 12/15/2017 8:51:51 AM

I HEREBY CERTIFY THAT THIS PLAN, SPECIFICATION OR REPORT WAS PREPARED BY ME OR UNDER MY DIRECT SUPERVISION, AND THAT I AM A DULY LICENSED PROFESSIONAL ENGINEER UNDER THE LAWS OF THE STATE OF MINNESOTA

SIGNATURE: Tejpal S. Bala TYPED OR PRINTED NAME: Tejpal Singh Bala

DATE 12/4/2017 LIC. NO. 49574

BOLTON & MENK

www.bolton-menk.com

REV.	BY	DATE
A	CAL	12/4/2017

CITY OF WINDOM, MINNESOTA

2017 WASTEWATER TREATMENT FACILITY IMPROVEMENTS

VICINITY MAP, LOCATION MAP AND SHEET INDEX

SHEET 1.02

ABBREVIATIONS

A	ACRE, ANGLE
AB	ANCHOR BOLT
ABBR	ABBREVIATION
ABUT	ABUTMENT
AC	ACTIVATED CARBON, ASPHALT CONCRETE
A/C	AIR CONDITIONING
ACOUS	ACOUSTIC, ACOUSTICAL
ACP	ASPHALTIC CONCRETE PAVEMENT, ASBESTOS CEMENT PIPE
ADJ	ADJUST, ADJACENT
AER	AERATION
AGG	AGGREGATE
AL	ALUMINUM, ALUM
ALT	ALTERNATE
ALUM	ALUMINUM
AMB	AMBIENT
ANSI	AMERICAN NATIONAL STANDARDS INSTITUTE (FORMERLY A.S.A.)
API	AMERICAN PETROLEUM INSTITUTE
APP	APPROACH
APPD	APPROVED
APPROX	APPROXIMATE
APR	APRON
ARC L	ARCH LENGTH
ARCH	ARCHITECTURAL
ASA	AMERICAN STANDARDS ASSOCIATION (NOW ANSI)
ASME	AMERICAN SOCIETY OF MECHANICAL ENGINEERS
ASSY	ASSEMBLY
ASTM	AMERICAN SOCIETY FOR TESTING AND MATERIAL
ATM	ATMOSPHERE
AVAR	AIR VACUUM AND AIR RELEASE VALVE
AWWA	AMERICAN WATER WORKS ASSOCIATION
AZ	AZIMUTH
BAL	BALANCE
BC	BEGIN CURVE, BOLT CIRCLE, BETWEEN CENTERS
BCR	BEGIN CURVE RETURN
BD	BOARD
BE	BOX ELDER
BEG	BEGIN
BET	BETWEEN
BF	BLIND FLANGE
BFP	BACK FLOW PREVENTER
BHP	BRAKE HORSEPOWER
BIT	BITUMINOUS
BLDG	BUILDING
BLD FLG	BLIND FLANGE
BLK	BLACK, BLOCK
BLKG	BLOCKING
BM	BEAM, BENCH MARK
BO	BLOW OFF ASSEMBLY
BOD	BIOCHEMICAL OXYGEN DEMAND
BORR	BORROW
BOT	BOTTOM
BPV	BACK PRESSURE VALVE
BR	BRIDGE, BASE OF RAIL
BRG	BEARING
B & S	BELL AND SPIGOT
BS	BACK SIGHT, BOTTOM SLOPE
BSMT	BASEMENT
BTM PL	BOTTOM PLATE
BTU	BRITISH THERMAL UNIT
BV	BUTTERFLY VALVE
BVC	BEGIN VERTICAL CURVE
BWV	BACK WATER VALVE
C	CENTIGRADE, CURVE, CUT
CAB	CABINET
CAP	CAPACITY
CAR	COUNTY AID ROAD
CB	CATCH BASIN, CHALK BOARD
CC	CENTER TO CENTER
CD	CEILING DIFFUSER
CEM	CEMETERY, CEMENT
CFH	CUBIC FEET PER HOUR
CFM	CUBIC FEET PER MINUTE
CFS	CUBIC FEET PER SECOND
C & G	CURB AND GUTTER
CHAN	CHANNEL
CHEM	CHEMICAL
CHG	CHANGE
CHK V	CHECK VALVE
CHXD PL	CHECKERED PLATE
CI	CAST IRON
CIP	CAST IRON PIPE
CL	CHLORINE GAS, CHLORINATOR, CHAIN LINK, CLEARANCE, CENTERLINE
CLG,CLNG	CEILING
CLR	CLEAR
CM	CENTIMETER
CML & C	CEMENT MORTAR LINED AND COATED
CMP	CORRUGATED METAL PIPE
CMP-A	CORRUGATED METAL PIPE ARCH
CMU	CONCRETE MASONRY UNIT
CO	CLEANOUT
COL	COLUMN
COM	COMPRESSOR
COMP	COMPACT
CONC	CONCRETE, CONCENTRIC
CONN	CONNECTION
CONST	CONSTRUCTION, CONSTRUCT
CONT	CONTINUED, CONTINUOUS
CONTR	CONTRACTOR
COR	CORNER
CORD	COUNTY ROAD
COTG	CLEAN-OUT TO GRADE
CP	CATTLE PASS
CPLG	COUPLING
CRK	CREEK
CS	CAUSTIC SODA, CAST STEEL, CURVE SPIRAL
C.S.A.H.	COUNTY STATE AID HIGHWAY
CT	CERAMIC TILE
CTR	CENTER
CTSK	COUNTERSINK
CTWD	COTTONWOOD
CU	COPPER, CUBIC
CU FT	CUBIC FOOT
CU YD	CUBIC YARD
CULT	CULTIVATED FIELD
CULV	CULVERT
CY	CUBIC YARD
CYL	CYLINDER
DC	DEGREE OF CURVE
DBLK	DITCH BLOCK
DAMP	DAMPER
DEP	DEPARTURE
DES	DESIGN, DESIRABLE
DET	DETAIL
DF	DRINKING FOUNDATION
DG	DOOR GRILLE, DITCH GRADE
DI	DUCTILE IRON
DIA	DIAMETER
DIAPH	DIAPHRAGM
DIP	DUCTILE IRON PIPE
DIST	DISTANCE, DISTRICT
DIV	DIVISION
DISCH	DISCHARGE
DISP	DISPENSER
DN	DOWN, DECANT
DO	DISSOLVED OXYGEN
DR	DOOR, DRAIN
DRWY	DRIVEWAY
DS	DRENCH SHOWER AND EYE WASH
DWG	DRAWING
DIFF	DIFFUSER, DIFFERENTIAL
E	EAST, RATE OF SUPERELEVATION, EXTERNAL DISTANCE
EA	EACH
EBL	EAST BOUND LANE
EC	END CURVE
ECC	ECCENTRIC
ECR	END CURB RETURN
EF	EACH FACE, EXHAUST FAN
EFF	EFFLUENT
EG	EXHAUST GRILLE
EL	ELEVATION
ELEC	ELECTRICAL, ELECTRONIC
ELEV	ELEVATION
EMB	EMBANKMENT
ENG	ENGINE
ENGR	ENGINEER
ENT	ENTRANCE
EQ	EQUAL
EQUA	EQUATION
EQUIP	EQUIPMENT
ER	EDGE OF ROAD
EST	ESTIMATE
EVAP	EVAPORATOR
EVC	END VERTICAL CURVE
EW	EACH WAY, EYE WASH
EXC	EXCAVATION
EXH	EXHAUST
EX-HY	EXTRA HEAVY
EXIST	EXISTING
EXP	EXPANSION
EXP JT	EXPANSION JOINT
EXT	EXTERIOR, EXTENSION
F	FAHRENHEIT, FINISH
FA	FEDERAL AID
FABR	FABRICATION, FABRICATE, FABRICATED
FAI	FRESH AIR INTAKE
FAI	FEDERAL AID INTERSTATE
FAP	FEDERAL AID PRIMARY
FAS	FEDERAL AID SECONDARY
FAU	FEDERAL AID URBAN
FB	FLAT BAR, FLOOR BEAM, FIELD BOOK
FCO	FLOOR CLEANOUT
FD	FLOOR DRAIN
FDN	FOUNDATION
FDR	FEEDER
FE	FIRE EXTINGUISHER, FINAL EFFLUENT, FLOW ELEMENT
FE COR	FENCE CORNER
FED	FEDERAL
FF	FLAT FACE, FAR FACE, FINISHED FLOOR
F TO F	FACE TO FACE
FG	FINISHED GRADE
FH	FIRE HYDRANT
FHDWL	HEAD WALL
F & I	FURNISH AND INSTALL
FIG	FIGURE
FIN	FINISHED
FL	FLOWLINE, FLOOR
FLEX	FLEXIBLE
FLOCC	FLOCCULATOR, FLOCCULATION
FLG	FLANGE
FLGD	FLANGED
FLR	FLOOR
FME	FARM ENTRANCE
FMH	FLEXIBLE METAL HOSE
FOC	FACE OF CONCRETE
FOM	FACE OF MASONRY
FOS	FACE OF STUDS
FOW	FACE OF WALL
FP	FENCE POST
FPC	FLEXIBLE PIPE COUPLING
FPM	FEET PER MINUTE
FPS	FEET PER SECOND
FR	FRAME
FR	FRONTAGE ROAD
FS	FAR SIDE, FLOOR SINK, FINISHED SURFACE, FORGED STEEL, FROTH SPRAY, FORE SIGHT, FLOW SWITCH
FT	FEET, FOOT
FTG FTNG	FOOTING
FUT	FUTURE
FWD	FORWARD
GA	GAGE, GAUGE
GAL	GALLON
GALV	GALVANIZED IRON
GAR	GARAGE
GDE	GRADE
GEN	GENERAL, GENERATOR
GFA	GROOVED FLANGE ADAPTOR
GI	GALVANIZED IRON
GLV	GLOBE VALVE
GP	GUY POLE
GPD	GALLONS PER DAY
GPH	GALLONS PER HOUR
GPM	GALLONS PER MINUTE
GR	GUARDRAIL
GR	GRAVEL
GRAN	GRANULAR
GRD	GRADE, GROUND
GR BRK	GRADE BREAK, GRADE CHANGE
GV	GATE VALVE
GYP	GYPSUM
H2O	WATER
H	HAUL
HB	HOSE BIBB
HDR	HEADER
HEX	HEXAGONAL
Hg	MERCURY
HI	HEIGHT OF INSTRUMENT
HMS	HOLLOW METAL STEEL
HO	HOUSE
H, HOR	HORIZONTAL
HORIZ	HORIZONTAL
HP	HORSEPOWER, HIGH PRESSURE
HR	HEATING RETURN, HOUR
HT	HEIGHT
HTG	HEATING
HTR	HEATER
H & V	HEATING AND VENTILATION
HW	HOT WATER, HIGH WATER
H.W. EL.	HIGH WATER ELEVATION
H.W.L.	HIGH WATER LEVEL
HWL	HIGH WATER LEVEL
HWR	HOT WATER RETURN
HWS	HOT WATER SUPPLY
HWO	HANDWHEEL OPERATED
HWY	HIGHWAY
HYD	HYDRAULIC, HYDRANT
IBC	INTERNATIONAL BUILDING CODE
IC	INTERIOR ANGLE OF CURVE
ID	INSIDE DIAMETER
IF	INSIDE FACE
IH	INTERSTATE HIGHWAY
IN	INCH
INCL	INCLUDE
INFL	INFLUENT
INFO	INFORMATION
INL	INLET
INP	IN PLACE
INSL	INSULATION, INSULATED
INSUL	INSULATION
INST	INSTALL
INSTR	INSTRUMENT
INV	INVERT ELEVATION
IP	IRON PIPE
IPS	IRON PIPE SIZE
IRRG	IRRIGATION
JAN	JANITOR
JCT	JUNCTION
J & A	JACK AND AUGER
JNT, JT	JOINT
JSTS	JOISTS
KG	KILOGRAM
KM	KILOMETER
KV	KILOVOLT
KW	KILOWATT
KWH	KILOWATT HOUR
L	LITER, LENGTH, LENGTH OF CURVE
LAB	LABORATORY
LAT	LATITUDE
LAV	LAVATORY
LB	POUND
LDG	LOADING
LEV	LEVEL
LF	LINEAR FEET
LIN	LINEAR
LO	LEVEL OUT
LOR	LINE-OFFICE REVISION
LOS	LENGTH OF OFFSET SPIRAL
LP	LOW POINT, LIGHT POLE
LOC	LOCATION
LT	LEFT
LWL	LOW WATER LEVEL
LWR	LOWER
M	METER
M	MIDDLE ORDINATE (CIRCULAR CURVE), MAXIMUM OFFSET (VERTICAL CURVE)
MAG	MAGNETIC
MAN	MANUAL
MAINT	MAINTENANCE
MACH	MACHINE
MAS	MASONRY
MATL	MATERIAL
MAX	MAXIMUM
MCC	MOTOR CONTROL CENTER
MECH	MECHANICAL
MEMB	MEMBRANE
MET	METAL
MFR, MFGR	MANUFACTURER
MGD	MILLION GALLONS PER DAY
MH	MANHOLE
MI	MALLEABLE IRON, MILE
MIN	MINIMUM, MINUTE
MISC	MISCELLANEOUS
MK	MARK
ML	MATCH LINE, MEDIAN LINE
MM	MILLIMETER
MNDOT	MINNESOTA DEPARTMENT OF TRANSPORTATION
MO	MOTOR OPERATED, MASONRY OPENING
MOD	MODEL
MON	MONUMENT
MPH	MILES PER HOUR
MS	MOP SINK
MTC	MECHANICAL-TYPE-COUPLING
MTD	MOUNTED
MTL	MATERIAL
MTR	MOTOR
N	NORTH
NAT	NATURAL
NBL	NORTH BOUND LANE
NBS	NATIONAL BUREAU OF STANDARDS
NC	NORMALLY CLOSED
NE	NORTH EAST
NEMA	NATIONAL ELECTRICAL MANUFACTURERS ASSOCIATION
NFPA	NATIONAL FIRE PROTECTION ASSOCIATION
NF	NEAR FACE
NIC	NOT IN CONTACT
NO	NUMBER, NORMALLY OPEN
NPS	NOMINAL PIPE SIZE (FORMERLY I.P.S.)
NPT	NATIONAL PIPE THREAD
NRS	NON-RISING STEM
NS	NEAR SIDE
NTS	NOT TO SCALE
NW	NORMAL WATER, NORTH WEST
N & D	NEAR SIDE
OBLIT	OBLITERATE
OC	OVER CROSSING, ON CENTER
O.C.E.W.	ON CENTER EACH WAY
OD	OUTSIDE DIAMETER
OF	OVERFLOW, OUTSIDE FACE
OH	OVERHEAD
OPER	OPERATOR, OPERATING
OPNG	OPENING
ORP	OXIDATION-REDUCTION POTENTIAL
OS & Y	OUTSIDE SCREW AND YOKE
OUT	OUTLET
OWG	OIL, WATER, GAS
OZ	OUNCE
P	POLE, PAGE, PLACE
PAVMT	PAVEMENT
PC	PRIMARY CLARIFIER, PORTLAND CEMENT POINT OF CURVATURE
PCC	POINT OF COMPOUND CURVE
PCOTG	PRESSURE CLEANOUT TO GRADE
PE	PLANT EFFLUENT, POLYELECTROLYTE, POLYMER
PE	PROJECT ENGINEER, PROFESSIONAL ENGINEER, POLYETHYLENE
PERF	PERFORATED
PERMISS	PERMISSIBLE
PER PERIM	PERIMETER
PG	PRESSURE GAGE
pH	HYDROGEN ION CONCENTRATION
PI	PLANT INFLUENT, POINT OF INTERSECTION, PRESSURE INDICATOR
PL	PLATE, PROPERTY LINE, PLACE
PLAS	PLASTER, PLASTIC
PLY WD	PLYWOOD
PLF	POUNDS PER LINEAR FOOT
PLT	PLANT
PNEU	PNEUMATIC
POC	POINT OF CURVE
POP	POPLAR
POST	POINT ON SEMI TANGENT
POT	POINT ON TANGENT
PP	POWER POLE
PPD	POUNDS PER DAY
PPH	POUNDS PER HOUR
PPM	PARTS PER MILLION
PR	PAIR
PRC	POINT OF REVERSE CURVE
PRESS	PRESSURE
PROJ	PROJECT
PROP	PROPERTY
PROV	PROVISIONS
PRV	PRESSURE REGULATING, RELIEF, REDUCING VALVE
PS	PRESSURE SWITCH
PSF	POUNDS PER SQUARE FOOT
PSI	POUNDS PER SQUARE INCH
PSIA	POUNDS PER SQUARE INCH ABSOLUTE
PSIG	POUNDS PER SQUARE INCH GAUGE
PT	POINT, POINT OF TANGENCY
PTDF	PRESSURE TREATED DOUGLAS FIR
PV	PLUG VALVE
PVC	POLYVINYL CHLORIDE
Q	DISCHARGE CFS.
QUANT	QUANTITY
R	RADIUS, RISER, RANGE, ROCK, RETURN, RATE OF SLOPE, RING
RAD	RADIALLY
RAG	RETURN AIR GRILLE
RAS	RETURN ACTIVATED SLUDGE
RC	REINFORCED CONCRETE
RCCP	REINFORCED CONCRETE CULVERT PIPE
RCP	REINFORCED CONCRETE PIPE
RD	ROOF DRAIN, ROUND, OR ROAD
RDWD	REDWOOD
RDWY	ROADWAY
RECIRC	RECIRCULATING
RECONST.	RECONSTRUCT
RED	REDUCER, REDUCING
REF	REFERENCE, REFER
REFR	REFRIGERATOR
RF	ROOF
REG	REGULATING
REINF	REINFORCE, REINFORCED
REM	REMOVE
RE-STL	REINFORCING STEEL
RET W	RETAINING WALL
REQ, REQD	REQUIRED
REV	REVISION
RM	ROOM
ROW	RIGHT OF WAY
RPM	REVOLUTIONS PER MINUTE, REINFORCED PLASTIC MORTAR
RR	RAILROAD
RT	RIGHT
R/W	RIGHT OF WAY
RWL	RAINWATER LEADER
RY	RAILWAY
S	SOUTH, SCUM, SINK, SECOND, SLOPE, SAND
SA	SAMPLE
SALV	SALVAGED
SAN	SANITARY
SAR	STATE AID ROAD
SBL	SOUTH BOUND LANE
SC	SPARE CHEMICAL, SECONDARY CLARIFIER
SCD	SCREWED
SCFM	STANDARD CUBIC FEET PER MINUTE
SCH	SCHEDULE
SCHED	SCHEDULE
SCP	SECTIONAL CONCRETE PIPE
SCPA	SECTIONAL CONCRETE PIPE ARCH
SD	SERVICE DRIVE
SDR	STORM DRAINS
SE	SOUTHEAST
SEC	SECONDARY
SECT	SECTION
SER	SERIES
SETT	SETTLING
SF	STORY FRAME
SFCE	SURFACE
S-G	SAND AND GRAVEL
SH	SHOWER
SHLD	SHOULDER
SHT	SHEET
SIM	SIMILAR
SL	SLUDGE, SLOPE
SO	SOUTH
SO VALVE	SHUT OFF VALVE
SP	STATIC PRESSURE
SPEC	SPECIFICATION
SPEC'D	SPECIFIED
SPK	SPIKE
SQ	SQUARE
SQYD	SQUARE YARD
SS	SANITARY SEWER, STAINLESS STEEL, SERVICE SINK
SSU	SECONDS SAYBOLT UNIVERSAL
ST	STREET, STONE, STEEL, STUCCO, STATE
STA	STATION
STC	SLEEVE-TYPE COUPLING
STD	STANDARD
STK	STAKE
STL	STEEL
STM	STORM
STN	STAINLESS
STN STL	STAINLESS STEEL
STP	STUMP
STRUCT	STRUCTURAL, STRUCTURE
SUCT	SUCTION
SUPER	SUPER ELEVATION
SUPP	SUPPLIER, SUPPLY
SURF	SURFACE
SV	SOLENOID VALVE
SW	SIDEWALK, SOUTH WEST
SWR	SIDEWALL REGISTER, SEWER
SYM	SYMMETRICAL, SYMBOL
SYST	SYSTEM
T	THERMOSTAT, TREAD OF STAIR, TOP, TANGENT
T & B	TOP AND BOTTOM
T & G	TONGUE AND GROOVE
TAN	TANGENT
TB	TACK BOARD
TBE	THREAD BOTH ENDS
TBM	TEMPORARY BENCH MARK
TC	TOP OF CURB
TEL	TELEPHONE
TEMP CONN	TEMPORARY CONNECTION
T.F.	TOP OF FOOTING
TFE	TOP OF FOOTING ELEVATION
TH	TRUNK HIGHWAY
THR'D	THREADED
TK	TANK
TOE	THREAD ONE END
TOPOG	TOPOGRAPHY
TP	TELEPHONE POLE, TELEGRAPH POLE
TR	TREE, TRENCH, TRACK
TRANS	TRANSITION, TRANSMITTED
TRANSV	TRANSVERSE
TS	TANGENT TO SPIRAL, TOPSOIL, TOP SLOPE
TTH	TEMPORARY TRUNK HIGHWAY
TV	THERMOSTATIC VALVE
TW	TOP OF WALL, THERMOMETER WELL
TWP	TOWNSHIP
TYP	TYPICAL
UBC	UNIFORM BUILDING CODE
UC	UNDER-CROSSING
UG	UNDERGROUND
UGC	UNDERGROUND CONDUIT
UH	UNIT HEATER
UL	UNDERWRITERS LABORATORIES
UNADJ	UNADJUSTED
UR	URINAL
USGS	U.S. GEOLOGICAL SURVEY
UW	UTILITY
V	VACUUM, VALVE, VERTICAL, VENT, VOLT, VOLUME
VAR	VARIES, VARIABLE
VB	VAPOR BARRIER
VC	VERTICAL CURVE
VCP	VITRIFIED CLAY PIPE
VERT	VERTICAL
VIT	VITRIFIED
VM	VEHICULAR MEASURE
VOL	VOLUME
VTC	VENT TO CEILING
VPC	VERTICAL POINT OF CURVATURE
VPI	VERTICAL POINT OF INTERSECTION
VPT	VERTICAL POINT OF TANGENCY
VTR	VENT THROUGH ROOF
W	WEST, WASTE, WATER
W/	WITH
WAS	WASTE ACTIVATED SLUDGE
WBL	WEST BOUND LANE
WC	WATER COLUMN, WATER CLOSET
WCO	WALL CLEANOUT
WD	WOOD
WDW	WINDOW
W'MN	WATER MAIN
W/O	WITHOUT
WS	WATER SURFACE
WSTP	WATER STOP
WT	WEIGHT
WWM	WELDED WIRE MESH
X-OVER	CROSSOVER
X-RD	CROSS ROAD
XS	EXTRA STRONG
XSECT	CROSS SECTION
YD	YARD
YH	YARD HYDRANT

NOTE: SEE PIPING SCHEDULE FOR ADDITIONAL ABBREVIATIONS

SCALES SHOWN ON DRAWINGS ARE FOR 24"x36" SIZE SHEETS ONLY. DRAWINGS PLOTTED ON ANY OTHER SIZE SHEETS NEED TO HAVE SCALES ADJUSTED ACCORDINGLY

© Bolton & Menk, Inc. 2017, All Rights Reserved
H:\WIND\T22113672\CAD\ENV\113672_D_BASE_103-ABBREV.DWG 10/18/2017 10:26:35 AM

I HEREBY CERTIFY THAT THIS PLAN, SPECIFICATION OR REPORT WAS PREPARED BY ME OR UNDER MY DIRECT SUPERVISION, AND THAT I AM A DULY LICENSED PROFESSIONAL ENGINEER UNDER THE LAWS OF THE STATE OF MINNESOTA

SIGNATURE: Tejpal S. Bala TYPED OR PRINTED NAME: Tejpal Singh Bala

DATE 12/4/2017 LIC. NO. 49574

BOLTON & MENK

www.bolton-menk.com

REV.	BY	DATE
A	CAL	12/4/2017

CITY OF WINDOM, MINNESOTA

2017 WASTEWATER TREATMENT FACILITY IMPROVEMENTS

ABBREVIATIONS

SHEET 1.03

PIPING & FITTINGS

AC	Air Cock	ST	Sediment Trap
BP	Backflow Preventer	SS	Service Sink
	Blind Flange	SH	Shower
	Drip Trap		Sight Flow Indicator
	Exhaust to Atmosphere (Inside)		Soil or Waste (Above Grade)
	Exhaust to Atmosphere (Outside)		Soil or Waste (Below Grade)
FT	Flame Trap		Union
FC	Flame Cell	U	Urinal
	Flanged Coupling Adapter (F.C.A.)		Valves
	Flexible Hose		Angle Valve
4"F.D.	Floor Drain – Size		Ball Valve
	Harnessed Sleeve Coupling (H.S.C.) Sleeve Coupling (S.C.)		Butterfly Valve
HB	Hose Bib		Check Valve
	1–1/2" Hose Gate		Diaphragm Valve
	Hot Water Recirculation (H.W.R.)		Gate Valve
L	Lavatory		Globe Valve
M	Meter		Hose Gate Valve
N.C.	Normally Closed		Mud Valve
N.O.	Normally Open		Knife Gate Valve
	Orifice		Needle Valve
	Pipe & Joint Designations		Pinch Valve
	Bell & Spigot Joint		Plug Valve
	Cold Water	PRV	Pressure Regulating Valve
	Flanged Adapter	PT	Pressure/Temperature Relief Valve
	Flanged Joint Fitting		Relief or Safety Valve
	Hot Water		Shear, Slide, Sluice or Stop Gate
	Mechanical Joint Fitting		3–Way Plug Valve (2–Port)
	Wall Pipe		3–Way Plug Valve (3–Port)
	Wall Sleeve		3–Way Valve
	Quick Disconnect Coupling		3–Way Plug Valve (4–Port)
	Reducer		Vent
	Removable Cap	VTR	Vent Through Roof
	Removable Plug	W.H.	Wall Hydrant
RD	Roof Drain (Above Grade)	W.C.	Water Closet
RD	Roof Drain (Below Grade)	W.H.	Water Heater
4"R.D.	Roof Drain – Size		Welded Cap
	Rupture Disc		Yard Hydrant
			Y–Type Strainer

HEATING, VENTILATING & AIR CONDITIONING

	Adjustable Extracting Device	RA	Return Air
	Adjustable Splitter Damper		Return or Exhaust Air Duct Section
BOD	Bottom of Duct	R	Rise in Respect to Air Flow
C	Cooling Coil		Round Diffuser
	Damper	12 ø	Round Duct Dimension
	Drop in Respect to Air Flow		Sidewall RA or EA Grille or Register
EA	Exhaust Air		Sidewall SA Register or Grille
F	Fan		Splitter Damper (Adjustable)
	Flexible Duct Connection		Square or Rectangular Diffuser
C	Heating Coil		Square or Rectangular to Round Transition
HWR	Hot Water Return	SA	Supply Air
HWS	Hot Water Supply		Supply or Outside Air Duct Section
	Linear or Slot Diffuser	TURNING VANES	Tee With Turning Vanes
OA	Outside Air	T	Thermostat
P	Pump	TOD	Top of Duct
24x12	Rectangular Duct Dimension (1st Figure is Side Shown 2nd Figure is Side Not Shown)	UH	Unit Heater
TURNING VANES	Rectangular Elbow With Turning Vanes		

INSTRUMENT IDENTIFICATION LETTERS

	FIRST LETTER		SUCCEEDING LETTERS		
	MEASURED OR INITIATING VARIABLE	MODIFIER	READOUT OR PASSIVE FUNCTION	OUTPUT FUNCTION	MODIFIER
A	Analysis		Alarm		
B	Burner Flame				
C	Conductivity (Electrical)			Control	
D	Density (Mass) or Specific Gravity	Differential			
E	Voltage (EMF)		Primary Element		
F	Flow Rate	Ratio (Fraction)			
G	Gaging (Dimensional)		Glass		
H	Hand (Manually Initiated)				High
I	Current (Electrical)		Indicate		
J	Power	Scan			
K	Time or Time–Schedule			Control Station	
L	Level		Light (Pilot)		Low
M	Moisture or Humidity				Middle or Intermediate
N					
O			Orifice (Restriction)		
P	Pressure or Vacuum		Point (Test) Connection)		
Q	Quantity or Event	Integrate or Totalize	Meter		
R	Radioactivity		Record or Print		
S	Speed or Frequency			Switch	
T	Temperature		Totalizing	Transmit	
U					
V	Viscosity			Valve, Damper or Louver	
W	Weight or Force		Well		
X					
Y				Relay or Compute	
Z	Position			Drive, Actuate or Unclassified Final Control Element	

INSTRUMENT IDENTIFICATION

FE 21

XXX — Instrument Letters (See Abbreviations Sheet 1.03)

Identification Letters (See Table)

Instrument Number

Locally Mounted Instrument

Mounted On Board

VALVE OPERATORS

C	Cylinders
CW	Chainwheel
D	Diaphragm
E	Electric
F	Float
H	Hydraulic
HW	Handwheel
L	Lever
M	Motor
P	Pneumatic
S	Solenoid

PIPING SCHEDULE

PIPING SYSTEM DESIGNATION	FLUID
A	Aeration
CA	Compressed Air
CG	Chlorine Gas
CS	Chlorine Solution
DG	Digester Gas
DS	Digester Sludge
FC	Ferric Chloride
GW	Grit Washing
GS	Grit Separation
HW	Hot Water
LR	Lagoon Return
ML	MIXED LIQUOR
NG	Natural Gas
NP	Non–Potable Water
NR	Noxic Return
P	Polymer
PD	Plant Drain
PP	Process Piping
PS	Primary Sludge
PW	Potable Water
R	Recirculation
RAS	Return Activated Sludge
S	Sample
SC	Scum
SD	Sanitary Drain
SN	Supernatant
SR	Sludge Recirculation
SS	Secondary Sludge
ST	Sludge Transfer
UW	Utility Water (Non–Potable Plant Water)
WAS	Waste Activated Sludge
WW	Waste Water

EQUIPMENT SCHEDULE

DESIGNATION	EQUIPMENT TYPE
F	Fan
ME	Miscellaneous Equipment
P	Pump
S	Special
SG	Stop Gate, shear gate, sluice gate, slide gate, flap gate
UH	Unit Heater
V	Valve (Valves 4" Diameter and Larger Included in Schedule

EQUIPMENT IDENTIFICATION

ME – DS – 2

Equipment Number

Piping System

Schedule Identification

PIPE IDENTIFICATION

EF 6 –DS – 1 (1)

E For Existing, F For Future, Blank for Construct

Line Number (Sequentially Numbered)

Piping Design Table

Piping System (See Piping Schedule)

Pipe Size In Inches

* NOTE: IF PLAN AND SECTION (OR DETAIL CALL–OUT AND DETAIL) ARE SHOWN ON THE SAME DRAWING, DRAWING NUMBER IS REPLACED BY A LINE.

PIPE DESIGN TABLE

PDT NO.	PIPE MATERIAL	FITTING MATERIAL
1	Class (as Specified) for Ductile Iron ANSI A21.51/AWWA C151 Flanged or Mechanical Joints as Indicated. Class (as Specified) for Threaded Flange	Class 125 Ductile or Cast Iron, ANSI A21.10/AWWA C110 Flanged or Mechanical Joint as Indicated
2	Standard Weight Carbon Steel, ASTM A120, Black	3–Inch and Smaller – 150 lb. Malleable Iron, ANSI B16.3 Banded, Screwed, 3–1/2 Inch and Larger – Standard Weight – ASTM A234 ANSI B16.9 Welded Steel or 125 lb. Flanged Cast Iron as Indicated
3	Standard Weight Carbon Steel, ASTM A120, Galvanized	3–Inch and Smaller – 150 lb. Malleable Iron, ANSI B16.3 Banded, Screwed, Galvanized 3–1/2 Inch and Larger – 125 lb. Cast Iron Flanged or Mechanical Coupling as Indicated
4	Copper, ASTM B88 Buried Service – Type K, Soft Temper Exposed Service – Type L, Hard Temper	Wrought Copper or Cast Bronze Solder Joint, ANSI B16.22, 150 psi
5	Polyvinyl Chloride, Schedule 80, Normal Impact ASTM D1785	Schedule 80 Polyvinyl Chloride, Socket Solvent Weld Joints, ASTM D2467
6	Fiberglass Reinforced Plastic (FRP) ASTM D2996	Epoxy Resin Fragment Wound or Molded Type – 150 psi @ 200 F
7	Linear Low Density Poly–ethylene Tubing, Vacuum Rated, Installed Inside 3" Schedule 80 PVC Pipe	Compression Fitting or Solvent Weld
8	Cast Iron Soil ANSI A112.5.1, Service Weight, Bell and Spigot or Hubless	Cast Iron Soil ANSI A112.5.1, Service Weight, Bell and Spigot or Hubless
9	Class (as Specified) for Ductile Iron ANSI A21.51/AWWA C151, Bell and Spigot	Class 125 Ductile or Cast Iron, ANSI A21.10/AWWA C110, Mechanical Joint
10	Polyvinyl Chloride Sewer Pipe, Bell and Spigot ASTM D–3034	Polyvinyl Chloride, Bell and Spigot, ASTM D–3034
11	Standard Weight Steel, ASTM A53, Seamless. (10 Mil Polyethylene or PVC Coated @ Exterior)	Standard Weight, Butt Weld Steel ANSI B16.9 ASTM A234
12	Polyvinyl Chloride Pressure Pipe ASTM D2241 with Bell & Spigot Ends. Wall thickness as Specified	Class 125 Ductile Iron or ANSI A21.10/ AWWA C110, Flanged or Mechanical Joints as Indicated
13	Polypropylene, ASTM D2146 Schedule 40 with Heat Fused Joints	Polypropylene, Schedule 40 Drainage Type with Heat Fused Socket Joints
14	Stainless Steel AISI Type 304, ASTM A312 Schedule 5S	Stainless Steel AISI Type 316 ANSI B16.9 Butt–Welded Schedule 5S or 150 lb Flanged
15	Welded Steel, AWWA C200 with Specified Wall Thickness. Epoxy/Cement Mortar Lined for Potable Water Service	ASTM A234, Grade B, Seamless or Butt–welded. Fittings 14–inches and Larger Mitered to Conform to AWWA C208 Table 2 with Butt–Weld Ends
16	Class (as Specified) for Ductile Iron ANSI A21.51/AWWA C151 Glass Lined Flanged or Mechanical Joints as Indicated Class (as specified) for Threaded Flange	Class 125 Ductile or Cast Iron ANSI A21.51/AWWA C151 Glass Lined Flanged or Mechanical Joints as Indicated

SECTION AND DETAIL IDENTIFICATION

SECTION IDENTIFICATION

(1) SECTION CUT ON DRAWING M–1 AS:

SECTION NUMBER — 2 / M–2 — DRAWING ON WHICH SECTION APPEARS *

(2) ON DRAWING M–2 THIS SECTION IS IDENTIFIED AS:

SECTION NUMBER — 2 SECTION / M–1 — DRAWING ON WHICH SECTION WAS TAKEN *

DETAIL IDENTIFICATION

(1) DETAIL CALL OUT ON DRAWING M–2 AS:

DETAIL NUMBER — 1 / M–1 — DRAWING ON WHICH DETAIL IS SHOWN *

(2) ON DRAWING M–1 THIS DETAIL IS IDENTIFIED AS:

DETAIL NUMBER — 1 DETAIL / M–2 — DRAWING ON WHICH DETAIL IS CALLED OUT *

STANDARD DETAIL IDENTIFICATION

(1) DETAIL CALL OUT ON DRAWING M–2 AS:

STANDARD DETAIL NUMBER — 1 / M–1 — DRAWING FROM WHICH DETAIL IS SHOWN *

SCALES SHOWN ON DRAWINGS ARE FOR 24"x36" SIZE SHEETS ONLY. DRAWINGS PLOTTED ON ANY OTHER SIZE SHEETS NEED TO HAVE SCALES ADJUSTED ACCORDINGLY

© Bolton & Menk, Inc. 2017, All Rights Reserved
H:\WIND\T22113672\CAD\ENV\113672_D_BASE_104–LEGEND.DWG 10/17/2017 10:07:07 AM

I HEREBY CERTIFY THAT THIS PLAN, SPECIFICATION OR REPORT WAS PREPARED BY ME OR UNDER MY DIRECT SUPERVISION, AND THAT I AM A DULY LICENSED PROFESSIONAL ENGINEER UNDER THE LAWS OF THE STATE OF MINNESOTA

SIGNATURE: Tejpal S. Bala TYPED OR PRINTED NAME: Tejpal Singh Bala

DATE 12/4/2017 LIC. NO. 49574

BOLTON & MENK

www.bolton–menk.com

REV.	BY	DATE
A	CAL	12/4/2017

CITY OF WINDOM, MINNESOTA

2017 WASTEWATER TREATMENT FACILITY IMPROVEMENTS

LEGEND

SHEET 1.04

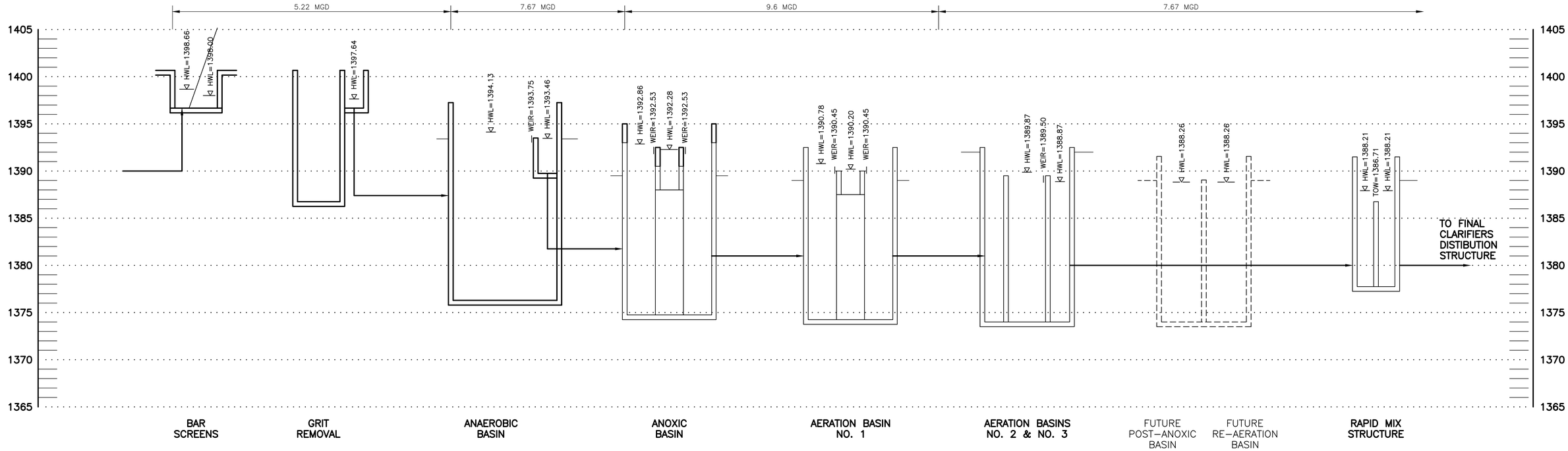

HYDRAULIC PROFILE

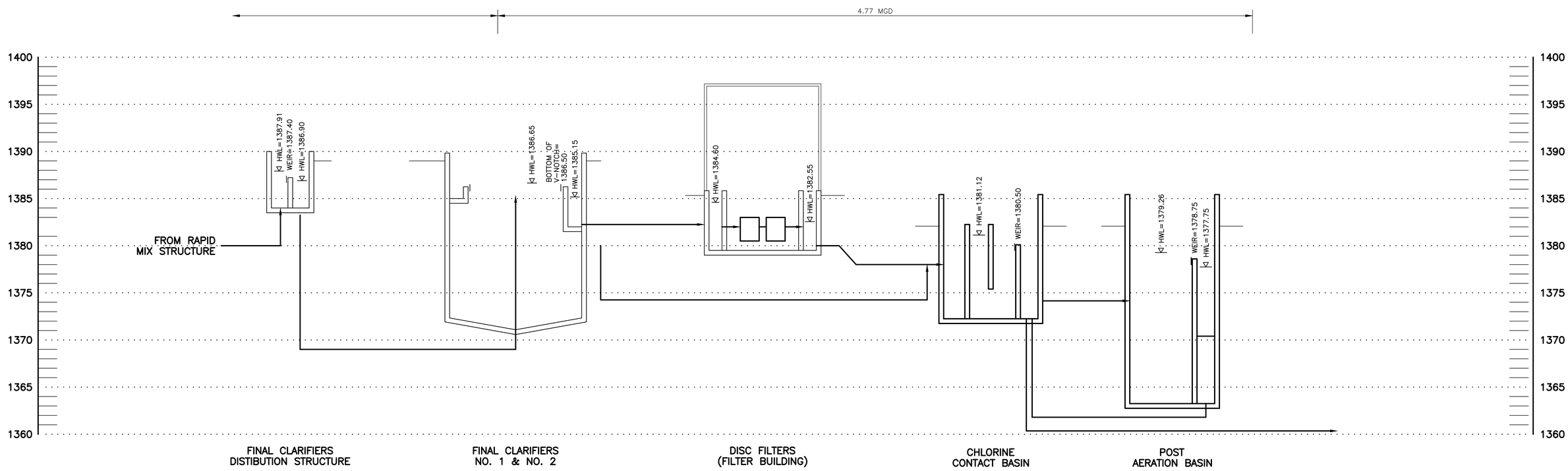

HYDRAULIC PROFILE

SCALES SHOWN ON DRAWINGS ARE FOR 24"x36" SIZE SHEETS ONLY. DRAWINGS PLOTTED ON ANY OTHER SIZE SHEETS NEED TO HAVE SCALES ADJUSTED ACCORDINGLY

© Bolton & Menk, Inc. 2017, All Rights Reserved
H:\WIND\T22113672\CAD\ENV\113672_D_BASE_105-HYD-PROFILE.DWG 11/2/2017 9:12:29 AM

I HEREBY CERTIFY THAT THIS PLAN, SPECIFICATION OR REPORT WAS PREPARED BY ME OR UNDER MY DIRECT SUPERVISION, AND THAT I AM A DULY LICENSED PROFESSIONAL ENGINEER UNDER THE LAWS OF THE STATE OF MINNESOTA

SIGNATURE: Tejpal S. Bala TYPED OR PRINTED NAME: Tejpal Singh Bala

DATE 12/4/2017 LIC. NO. 49574

BOLTON & MENK

www.bolton-menk.com

REV.	BY	DATE
A	CAL	12/4/2017

CITY OF WINDOM, MINNESOTA

2017 WASTEWATER TREATMENT FACILITY IMPROVEMENTS

HYDRAULIC PROFILE

SHEET 1.05

DESIGN DATA

DESCRIPTION	VALUE
Influent Design Criteria	
Design Year	2037
Design Population	5,159
Design Flows and Loadings	
Average Dry Weather Flow (ADW)	1.385 mgd (962 gpm)
Average Wet Weather Flow (AWW)	1.93 mgd (1341 gpm)
Peak Hourly Wet Weather Flow (PHWW)	4.77 mgd (3313 gpm)
Peak Instantaneous Wet Weather Flow (PIWW)	5.22 mgd (3625 gpm)
Carbonaceous Biochemical Oxygen Demand (CBOD5)	
Design Year	1094 lbs/day
Total Suspended Solids (TSS)	
Design Year	1184 lbs/day
Total Kjeldahl Nitrogen (TKN)	
Design Year:	365 lbs/day
Total Phosphorus (P)	
Design Year:	59 lbs/day
Preliminary Treatment	
Mechanical Bar Screen	
Number of Screen	2
Type	Perforated Filter
Screen Opening Size	6mm
Angle of Screen	60 degrees from horizontal
Grit Removal	
Type	Centrifugal/Forced Vortex
Anaerobic Basin	
No. of Tanks	1
Total Volume	233,675 Gallons
Dimensions	55' (L) X 35.5' (W) X16' (D)
Hydraulic Retention Time (HRT)	60 minutes
Anoxic Basin	
No. of Tanks	1
Total Volume	338,387 Gallons
Dimensions	60' (dia.) X 16' (D)

DESCRIPTION	VALUE
Activated Sludge Process	
Solids Retention Time (max.)	25 days
Aeration Volume (total)	1.09 MG
Hydraulic Retention Time	
At ADW	12.4 hours
At AWW	8.9 hours
At PHWW	3.6 hours
CBOD Loading Rate	11.43 lbs/day/1000 cu. ft.
MLSS (est. at cold weather)	2,700 mg/L
Sludge Return Rate	
Minimum	1.385 mgd
Maximum	2.895 mgd
F/M Ratio	0.075
Waste Sludge Production Rate	984 lbs TSS/day
Aeration Basins	
Number of Units	3
Circular Basins	
No. of Units	1
Diameter (feet)	60
Depth (feet)	16
Rectangular Basins	
No. of Units	2
Diameter (feet)	48'-10" x 36'-0"
Depth (feet)	16
Aeration System	
Type	Fine Bubble, Flexible Membrane
Actual Oxygenation Rate (total)	8255 lbs O2/day
Max. Water Temperature	25 Deg. C.
Alpha Factor (WW transfer correction)	0.45
Beta Factor (WW saturation correction)	0.95
Minimum Dissolved Oxygen Concentration	2 mg/L
Air Flow Rate (total)	4150 scfm
Final Clarifiers	
Number of Units	2
Type	Circular, Center Feed, Half Bridge, Peripheral Launder Collection
Sludge Withdrawal	Suction type
Diameter	60 feet
Side Water Depth	14 feet
Operating Volume per Clarifier	296,000 gallons
Hydraulic Loading Rate (peak)	844 gal/d/sq. ft.
Solids Loading (peak)	35 lbs/day/sq. ft.
Solids Loading (avg.)	12 lbs/day/sq. ft.
Weir Loading at PHWW	11,600 gpd/LF
Filter	
Number of Units	2
Type	Disc Filters
Design Flow per unit	4.77 MGD (PHWW)
Hydraulic Loading Rate	3.79 gpm/ sq. ft.
Number of Discs per Filter	21
Filter Pore Size	10 micro meter
Filter Disc Diameter	2.4 m
Total Filter area per Disc	72.0 sq. ft.
Submerged Filter area per Disc	41.6 sq. ft.
Backwash	
Backwash Flow	143 gpm @ 110 psi
Backwash pump HP	25 HP

DESCRIPTION	VALUE
Chlorination	
Number of Basins	1
Volume	55,960 gallons
Detention Time (AWW)	41.7 minutes
Detention Time (@ PHWW)	17 minutes
Chlorine Feed Rate (Max.)	239 lbs/d
Length: Width Ratio	40
Dechlorination	
Location	Effluent End of Chlorine Contact Basin
Type	Sulfur Dioxide Gas
Feed Rate (Max.)	239 lbs/d
Post Aeration	
Location	Adjacent to Chlorine Contact Basin
Type	Fine Bubble Diffuser
Minimum Air Flow Rate	193 scfm
Sludge Handling Facilities	
Sludge Holding Tank No. 1	
Volume	261,800 gallons
Sludge Feed Rate	64,450 gal/d
Feed Concentration	0.5%
Effluent Concentration	1.5%
Storage Time	25 days
Aerobic Digester	
Total Volume	190,350 gallons
Supernatant Storage Volume	27,200 gallons
Sludge Feed Rate	7864 gal/d
Feed Concentration	1.5%
Effluent Concentration	3.0%
Storage Time	41 days
Air Flow Rate	30 scfm/1000 cu. ft.
Post Digestion Sludge Holding	
Sludge Holding Tank No. 2 (New)	
Number of Basins	3
Dimensions of each Basin	80' (L) X 40' (W) X 18' (D)
Volume per Basin	430,848 gal.
Total Volume	1,292,544 gal.
Effluent Concentration	4.0%
Storage Time	198 days
Total Sludge Storage Time	264 days

DESCRIPTION	VALUE
Aeration Blowers (ME-A-2, 3 and 4)	
Number of Units	3 (2 required + 1 standby)
Type	Positive Displacement
Max. Inlet Temperature	110°F
Min. Inlet Temperature	-20°F
Capacity (at max. temp)	1415 scfm at 8.5 psig
Motor Size	100 hp
Control	VFD & dissolved oxygen level
Aerobic Digester Blower (ME-A-1)	
Number of Units	1 (aeration standby blower will be back up)
Type	Positive Displacement
Max. Inlet Temperature	110°F
Min. Inlet Temperature	-20°F
Capacity (at max. temp)	935 scfm at 8.5 psig
Motor Size	60 hp
Control	VFD
Aerobic Digester Blower (ME-A-5)	
Number of Units	1
Type	Positive Displacement
Max. Inlet Temperature	110°F
Min. Inlet Temperature	-20°F
Capacity (at max. temp)	195 scfm at 8.5 psig
Motor Size	15 hp
Control	VFD
Return Activated Sludge Pumps (P-RAS-1, 2 and 3)	
Number of Units	3
Type	Non-clog centrifugal
Capacity (each)	2011 gpm at 11.8 ft. TDH
Motor Size	10 hp
Drive	VFD
Scum Pump (P-SC-1)	
Number of Units	1
Type	Non-clog centrifugal
Capacity	150 gpm at 12.5 ft. TDH
Motor Size	1 hp
Drive	Constant speed
Waste Sludge Pumps (P-WAS-1)	
Number of Units	1
Type	Non-clog centrifugal
Capacity	150 gpm at 12.5 ft. TDH
Motor Size	1 hp
Drive	Constant speed
Sludge Transfer Pumps (P-ST-1 and 2)	
Number of Units	2
Type	Rotary Lobe Pump
Capacity	350 gpm at 25 psig
Maximum Speed	300 rpm
Motor Size	15 hp
Drive	Direct drive
Sludge Recirculation Pump (P-SR-1)	
Type	Recessed impeller vortex pump
Capacity	125 gpm at 29 ft. TDH
Motor Size	7.5 hp
Drive	Constant speed belt drive
Mixed Liquor Suspended Sludge ReturnPumps (P-MLSS-1 & 2)	
Number of Units	2
Type	Non-clog centrifugal
Capacity (each)	2681 gpm at 13.5 ft. TDH
Motor Size	15 hp
Drive	VFD
Anoxic ReturnPumps (P-AR-1 & 2)	
Number of Units	2
Type	Non-clog centrifugal
Capacity (each)	2011 gpm at 10 ft. TDH
Motor Size	7.5 hp
Drive	VFD

DESCRIPTION	VALUE
Supernatant Pumps (P-SN-1, 2 and 3)	
Number of Units	3
Type	Submersible
P-SN-1 and 2	
Capacity	200 gpm @ 32 ft. TDH
Motor Size (hp)	5
Drive	Fixed speed
P-SN-3	
Capacity	125 gpm @ 21 ft. TDH
Motor Size (hp)	1.9
Drive	Fixed speed
Anaerobic Tank Mixers (ME-MX-1 & 2)	
Number	2
Type	Submersible
Propeller Speed	576 rpm
Motor Size	7.5 hp
Control	VFD
Anoxic Tank Mixers (ME-MX-3 & 4)	
Number	2
Type	Submersible
Propeller Speed	576 rpm
Motor Size	7.5 hp
Control	VFD
Sludge Holding Tank Mixer (ME-MX-6, 7, & 8)	
Number	3
Type	Submersible with Outdoors motor
Capacity	1050 gpm
Motor Size	40 hp
Control	Constant
Chlorination/Dechlorination Units (ME-CL-1 and ME-SO-1)	
Number of Units	2
Type	Submersible induction units
Maximum Gas Induction	500 ppd
Maximum Liquid Induction	15 gpm
Maximum Vacuum	18 (in Hg)
Motor Size (hp)	2
Heat Exchanger (ME-HX-1)	
Number of Units	1
Type	Spiral Flow
Capacity	225,000 BTU/hr
Water	
Flow Rate	30 gpm
Temp. in	165°F
Temp. out	150°F
Sludge	
Flow Rate	120 gpm
Temp. in.	68°F
Temp. out	70.6°F
Rapid Mix Tank (ME-MX-5)	
Number of Units	1
Tank Dimension	7' (L) x 7' (W)
Depth	10.46'
Volume	3,834 gals
Detention @ PHWW	1.15 min
Motor Size	15 hp
Drive	Fixed

SCALES SHOWN ON DRAWINGS ARE FOR 24"x36" SIZE SHEETS ONLY. DRAWINGS PLOTTED ON ANY OTHER SIZE SHEETS NEED TO HAVE SCALES ADJUSTED ACCORDINGLY

© Bolton & Menk, Inc. 2017, All Rights Reserved
H:\WIND\T22113672\CAD\ENV\113672_D_BASE_106-DESIGN-DATA.DWG 11/16/2017 6:04:30 PM

I HEREBY CERTIFY THAT THIS PLAN, SPECIFICATION OR REPORT WAS PREPARED BY ME OR UNDER MY DIRECT SUPERVISION, AND THAT I AM A DULY LICENSED PROFESSIONAL ENGINEER UNDER THE LAWS OF THE STATE OF MINNESOTA

SIGNATURE: Tejpal S. Bala TYPED OR PRINTED NAME: Tejpal Singh Bala

DATE 12/4/2017 LIC. NO. 49574

BOLTON & MENK

www.bolton-menk.com

REV.	BY	DATE
A	CAL	12/4/2017

CITY OF WINDOM, MINNESOTA

2017 WASTEWATER TREATMENT FACILITY IMPROVEMENTS

DEISGN DATA

SHEET 1.06

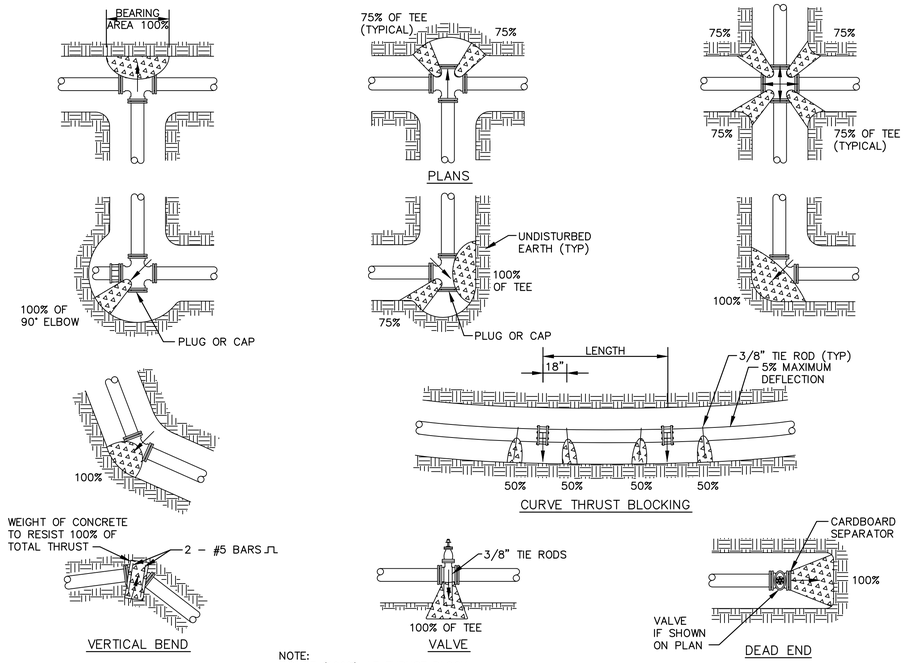

100% BEARING AREA (SQ. FT.)				
PIPE SIZE	DEAD END OR TEE	90° ELBOW	45° ELBOW	22 1/2° ELBOW
4	2.4	3.4	1.9	0.9
6	4.9	6.9	3.8	1.9
8	8.4	11.8	6.4	3.4
10	13.7	19.3	10.5	5.4
12	19.4	27.3	14.9	7.7
14	26.3	37.0	20.1	10.3
16	34.0	47.9	26.2	13.3
18	43.9	61.8	33.7	17.2
20	54.3	76.4	41.7	21.2
24	77.9	109.8	59.8	30.5

NOTE:
BEARING AREAS ARE BASED ON 250 lb. MAXIMUM PRESSURE AND SOIL BEARING STRENGTH OF 2000 lb./SQ. FT.

NOTE:
FIGURE (100%) AT THRUST BLOCK INDICATES PER CENT OF TOTAL THRUST TO BE APPLIED FOR BEARING AREA.

NOTE:
ARROWS (⟶) INDICATE THRUST DIRECTION.

NOTE:
CONCRETE FOR THRUST BLOCKS TO BE 2000 P.S.I.

NOTES:
1. RESTRAINING RODS ARE REQUIRED AT ALL TEES AND AT BENDS DEFLECTING 22 1/2° OR MORE.

2. WRAP THE PIPE WITH POLYETHYLENE WRAPPING PRIOR TO POURING THE THRUST BLOCK.

3. SEE SOILS REPORT FOR BEARING STRENGTH OF SOIL. IN ABSENCE OF A SOILS REPORT, AN AVERAGE SOIL (SPADEABLE MEDIUM CLAY) CAN BE ASSUMED TO HAVE A BEARING STRENGTH OF 2000 P.S.I.

4. THRUST BLOCKS ARE NOT REQUIRED ON P.V.C. WITH SOLVENT WELDED JOINTS.

SIDE THRUST PER 100 lb./SQ.IN. PRESSURE PER DEGREE OF DEFLECTION			
PIPE SIZE	SIDE THRUST-lb.	PIPE SIZE	SIDE THRUST-lb.
4	35	14	377
6	72	16	486
8	122	18	665
10	197	20	790
12	278	24	1150

MULTIPLY THRUST BY DEGREE OF DEFLECTION TO OBTAIN TOTAL THRUST

1 / 1.07 CONCRETE THRUST BLOCKS FOR DUCTILE IRON AND PVC PIPE
NOT TO SCALE

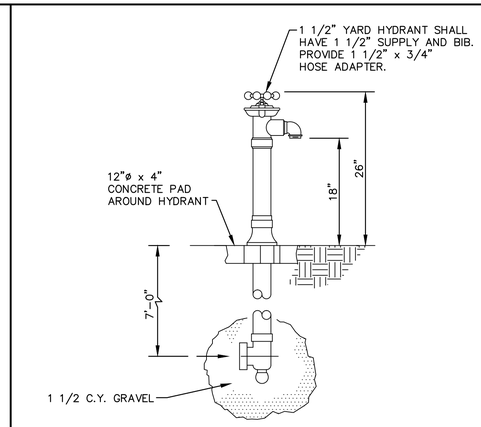

2 / 1.07 YARD HYDRANT DETAIL
NOT TO SCALE

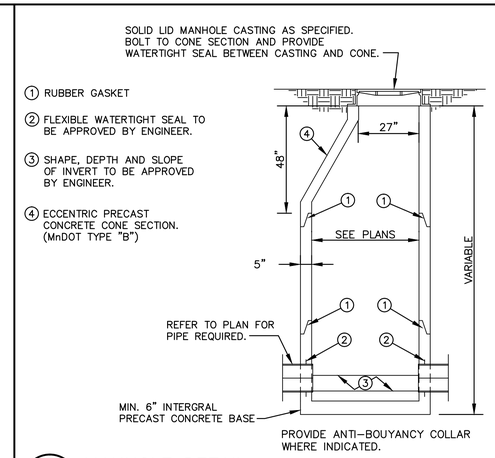

3 / 1.07 MANHOLE DETAIL
NOT TO SCALE

NOTES:
1. VALVE BOX SHALL BE CENTERED ON OPERATING NUTS, STRAIGHT, FREE FROM DEBRIS, AND ALL SECTIONS UNBROKEN
2. VALVES IN EASEMENTS SHALL HAVE CHANNEL POST WITNESS MARKERS WITH REFLECTIVE "GV" SIGN
3. DEEP VALVES SHALL HAVE NUT EXTENSIONS INSTALLED TO ELEVATION TO ACCOMMODATE STANDARD 10' KEY; BOTTOM NUT SHALL BE BOLTED TO VALVE NUT AND ONLY ONE SECTION
4. COMPACTION WITH MECHANICAL TAMPER AROUND VALVE BOX SHALL BE PLACED AND COMPACTED WITH 2' LIFTS TO ACHIEVE 95% COMPACTION
5. GATE VALVES LOCATED WITHIN THE CONCRETE SIDEWALK SHALL INCLUDE A METAL SEPARATOR BETWEEN THE VALVE BOX AND THE CONCRETE

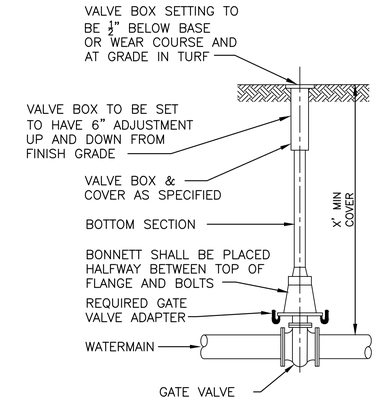

GATE VALVE BOX INSTALLATION
NOT TO SCALE

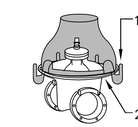

TYPICAL GATE VALVE

1) GATE VALVE ADAPTOR: 1/4" STEEL WITH UNDERGROUND COATING

2) NEOPRENE GASKET INSTALLED BETWEEN THE GATE VALVE AND GATE VALVE ADAPTOR TO ABSORB ANY PRESSURE OR MOVEMENT CAUSED BY ROAD TRAFFIC

GATE VALVE ADAPTOR
NOT TO SCALE

6 / 1.07 TYPICAL BURIED VALVE
NOT TO SCALE

NOTE: WYES, BENDS AND PIPE SIZES AS REQUIRED BY PLANS AND SPECS

SEWER SERVICE REQUIREMENTS
-GRADES-
MINIMUM - 1.0% (1/8" PER FT.)
OPTMUM - 2.0% (1/4" PER FT.)
MAXIMUM - 12.5%

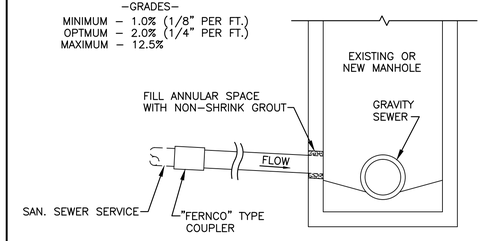

NOTE: WHERE NO EXISTING SEWER IS INPLACE, INSTALL PVC CAP AND MARK LOCATION WITH 4"X4"X6' TIMBER & 3/8" X 4' STEEL ROD BURY 6" BELOW FINISHED GRADE.

4 / 1.07 SANITARY SEWER SERVICE CONNECTING TO MANHOLE
NOT TO SCALE

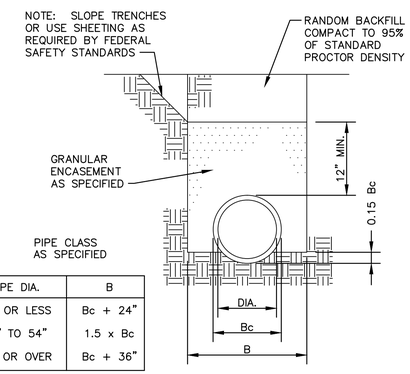

PIPE DIA.	B
36" OR LESS	Bc + 24"
42" TO 54"	1.5 x Bc
60" OR OVER	Bc + 36"

5 / 1.07 TRENCH DETAIL REINFORCED CONCRETE PIPE
NOT TO SCALE

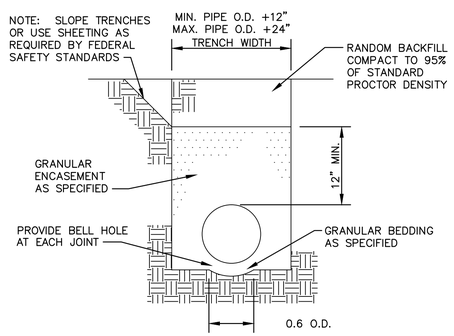

7 / 1.07 TRENCH DETAIL DUCTILE IRON PIPE
NOT TO SCALE

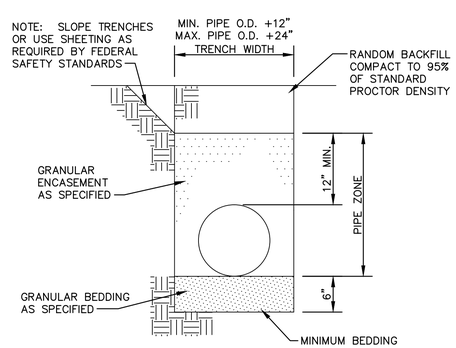

8 / 1.07 TRENCH DETAIL PVC PIPE
NOT TO SCALE

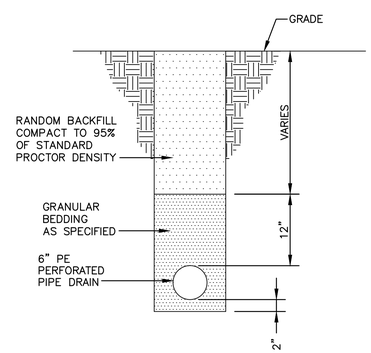

9 / 1.07 DRAIN TILE DETAIL
NOT TO SCALE

SCALES SHOWN ON DRAWINGS ARE FOR 24"x36" SIZE SHEETS ONLY. DRAWINGS PLOTTED ON ANY OTHER SIZE SHEETS NEED TO HAVE SCALES ADJUSTED ACCORDINGLY

© Bolton & Menk, Inc. 2017, All Rights Reserved
H:\WIND\T22113672\CAD\ENV\113672_D_BASE_107-112-STANDARD-DETAILS.DWG 6/15/2017 9:47:45 AM

I HEREBY CERTIFY THAT THIS PLAN, SPECIFICATION OR REPORT WAS PREPARED BY ME OR UNDER MY DIRECT SUPERVISION, AND THAT I AM A DULY LICENSED PROFESSIONAL ENGINEER UNDER THE LAWS OF THE STATE OF MINNESOTA

SIGNATURE: Tejpal S. Bala TYPED OR PRINTED NAME: Tejpal Singh Bala
DATE 12/4/2017 LIC. NO. 49574

BOLTON & MENK
www.bolton-menk.com

REV.	BY	DATE
A	CAL	12/4/2017

CITY OF WINDOM, MINNESOTA
2017 WASTEWATER TREATMENT FACILITY IMPROVEMENTS
STANDARD DETAILS

SHEET 1.07

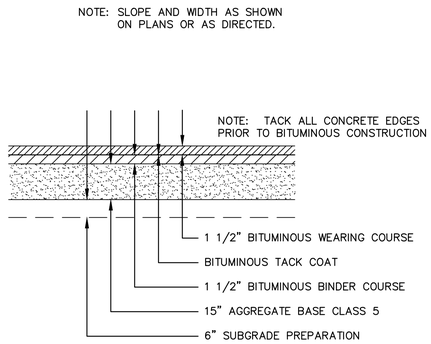

1 / 1.08 BITUMINOUS ROADWAY SECTION
NOT TO SCALE

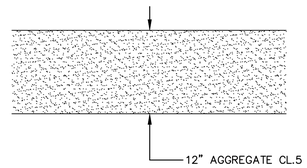

2 / 1.08 GRAVEL ROADWAY PATCH SECTION
NOT TO SCALE

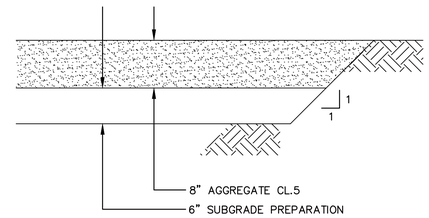

3 / 1.08 GRAVEL ROADWAY SECTION
NOT TO SCALE

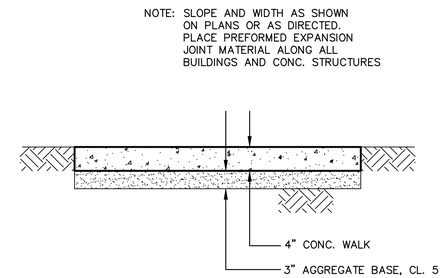

4 / 1.08 CONCRETE WALK SECTION
NOT TO SCALE

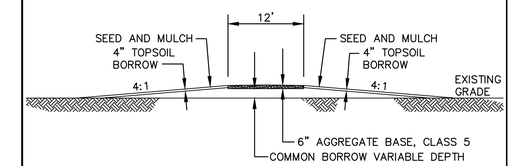

5 / 1.08 GRAVEL ROADWAY SECTION
NOT TO SCALE

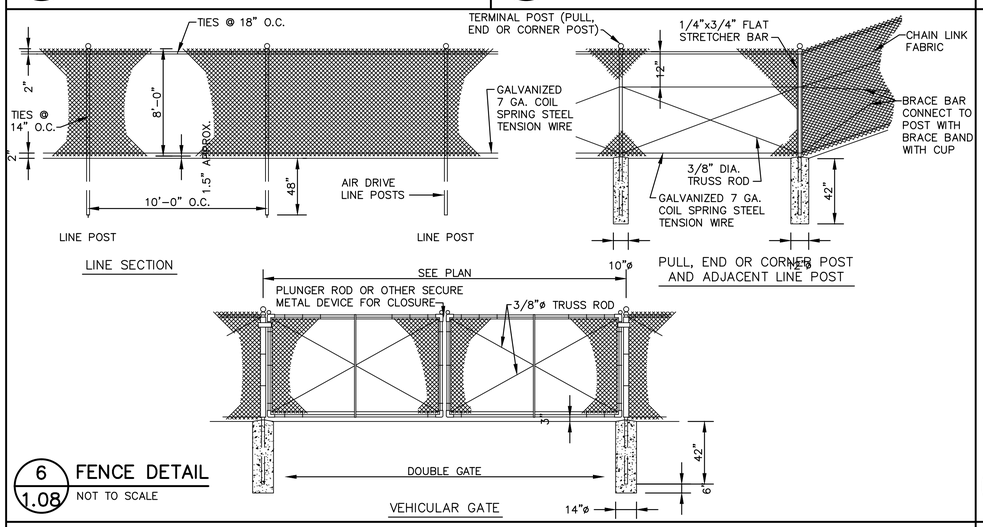

6 / 1.08 FENCE DETAIL
NOT TO SCALE

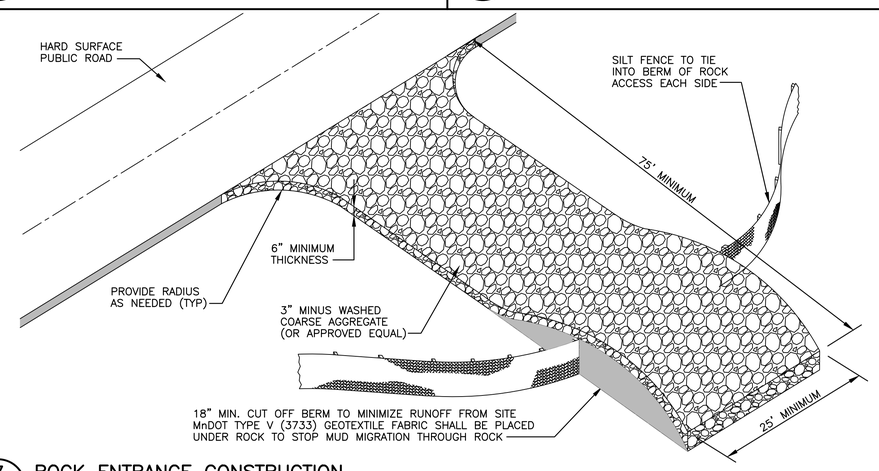

7 / 1.08 ROCK ENTRANCE CONSTRUCTION
NOT TO SCALE

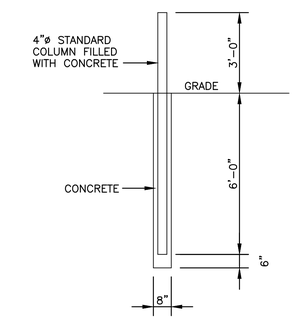

8 / 1.08 GUARDPOST DETAIL
NOT TO SCALE

SCALES SHOWN ON DRAWINGS ARE FOR 24"x36" SIZE SHEETS ONLY. DRAWINGS PLOTTED ON ANY OTHER SIZE SHEETS NEED TO HAVE SCALES ADJUSTED ACCORDINGLY

© Bolton & Menk, Inc. 2017, All Rights Reserved
H:\WIND\T22113672\CAD\ENV\113672_D_BASE_107-112-STANDARD-DETAILS.DWG 6/15/2017 9:47:45 AM

I HEREBY CERTIFY THAT THIS PLAN, SPECIFICATION OR REPORT WAS PREPARED BY ME OR UNDER MY DIRECT SUPERVISION, AND THAT I AM A DULY LICENSED PROFESSIONAL ENGINEER UNDER THE LAWS OF THE STATE OF MINNESOTA

SIGNATURE: Tejpal S. Bala TYPED OR PRINTED NAME: Tejpal Singh Bala
DATE 12/4/2017 LIC. NO. 49574

BOLTON & MENK
www.bolton-menk.com

REV.	BY	DATE
A	CAL	12/4/2017

CITY OF WINDOM, MINNESOTA
2017 WASTEWATER TREATMENT FACILITY IMPROVEMENTS
STANDARD DETAILS

SHEET 1.08

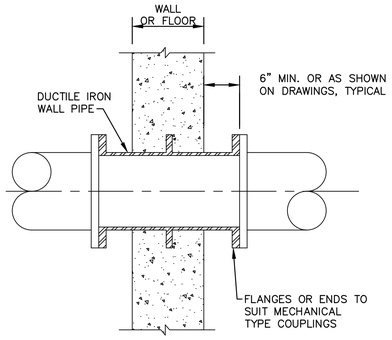

1 / 1.09 DUCTILE IRON WALL PIPE
NOT TO SCALE

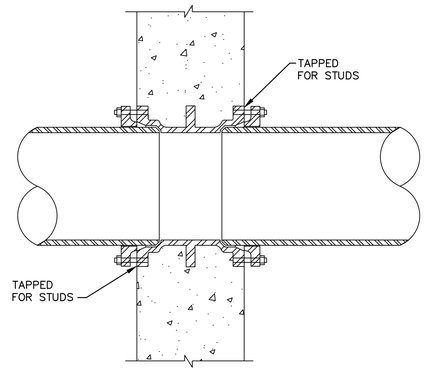

2 / 1.09 M.J.–M.J. WALL PIPE DETAIL
NOT TO SCALE

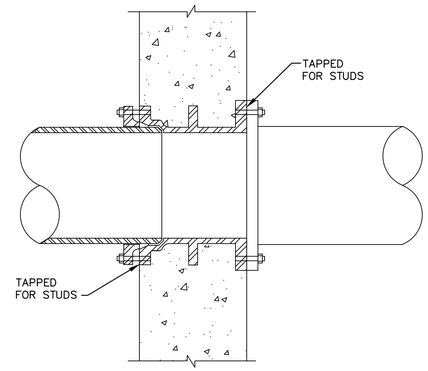

3 / 1.09 F–M.J. WALL PIPE DETAIL
NOT TO SCALE

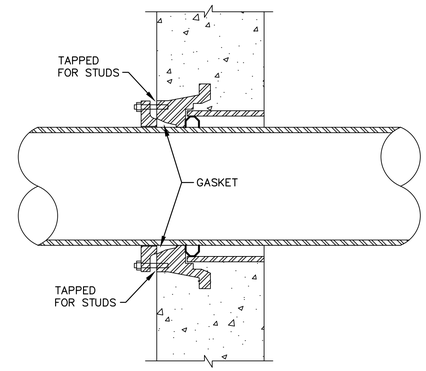

4 / 1.09 EXTERIOR WALLS (GRADE ONE SIDE)
M.J.–M.J. WALL PIPE DETAIL
NOT TO SCALE

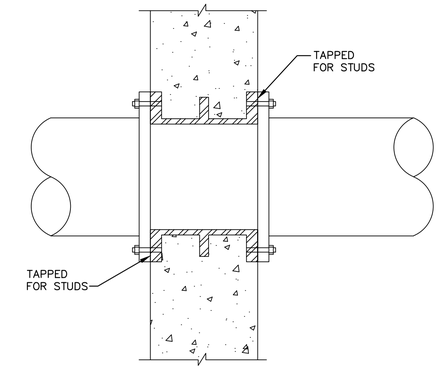

5 / 1.09 F–F WALL PIPE DETAIL
NOT TO SCALE

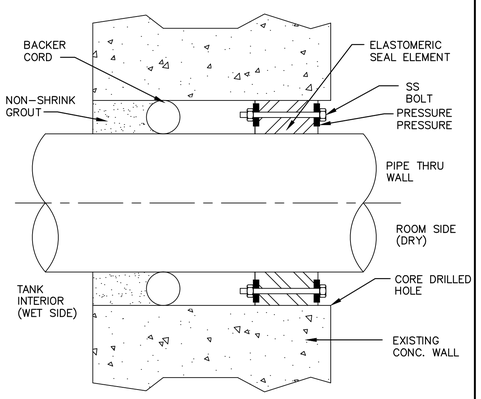

6 / 1.09 WALL PENETRATIONS CONSTRUCTED IN EXISTING STRUCTURES
NOT TO SCALE

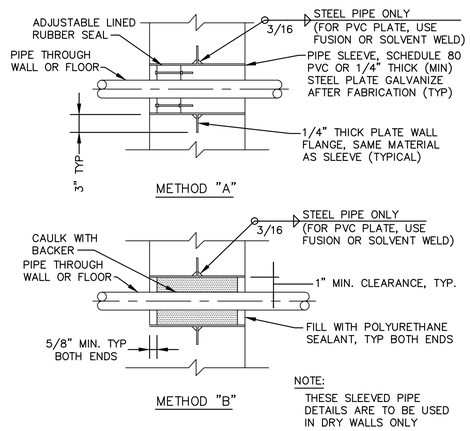

7 / 1.09 SLEEVED PIPE OPENING 3" AND SMALLER
NOT TO SCALE

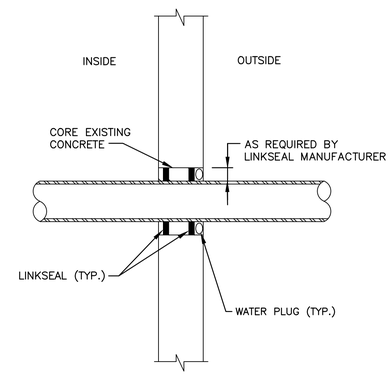

8 / 1.09 WALL PIPES IN EXISTING STRUCTURES
NOT TO SCALE

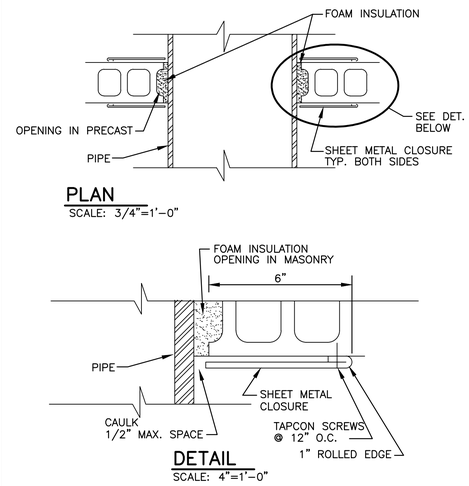

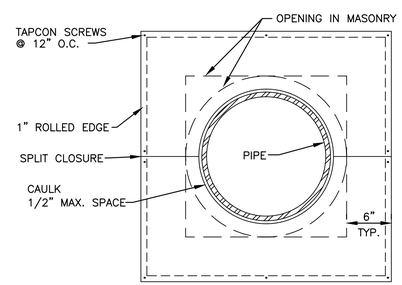

10 / 1.09 OPENING CLOSURE AT MASONRY OPENINGS
NOT TO SCALE

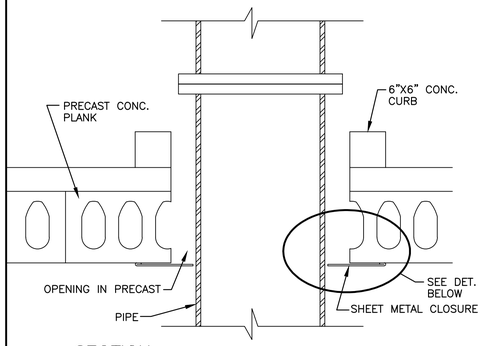

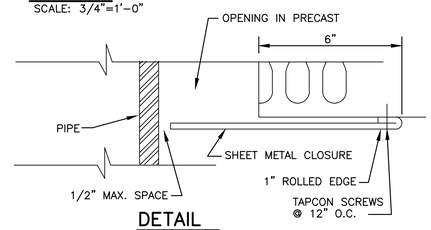

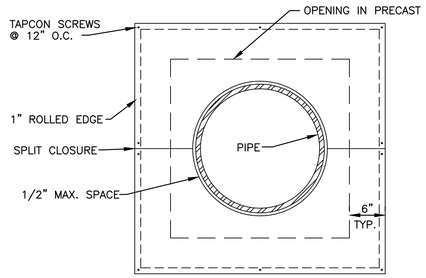

11 / 1.09 OPENING CLOSURE AT PRECAST OPENINGS
NOT TO SCALE

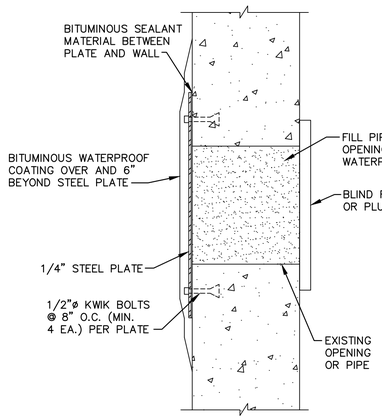

9 / 1.09 SEALING OF EXISTING OPENINGS
NOT TO SCALE

SCALES SHOWN ON DRAWINGS ARE FOR 24"x36" SIZE SHEETS ONLY. DRAWINGS PLOTTED ON ANY OTHER SIZE SHEETS NEED TO HAVE SCALES ADJUSTED ACCORDINGLY

© Bolton & Menk, Inc. 2017, All Rights Reserved
H:\WIND\T22113672\CAD\ENV\113672_D_BASE_107–112–STANDARD–DETAILS.DWG 6/15/2017 9:47:45 AM

I HEREBY CERTIFY THAT THIS PLAN, SPECIFICATION OR REPORT WAS PREPARED BY ME OR UNDER MY DIRECT SUPERVISION, AND THAT I AM A DULY LICENSED PROFESSIONAL ENGINEER UNDER THE LAWS OF THE STATE OF MINNESOTA

SIGNATURE: Tejpal S. Bala TYPED OR PRINTED NAME: Tejpal Singh Bala
DATE 12/4/2017 LIC. NO. 49574

BOLTON & MENK
www.bolton–menk.com

REV.	BY	DATE
A	CAL	12/4/2017

CITY OF WINDOM, MINNESOTA
2017 WASTEWATER TREATMENT FACILITY IMPROVEMENTS
STANDARD DETAILS

SHEET 1.09

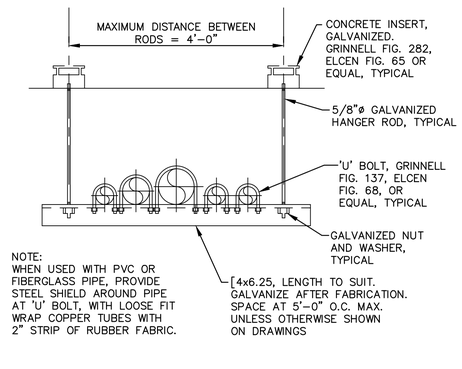

1 / 1.10 TRAPEZE PIPE HANGER

NOT TO SCALE

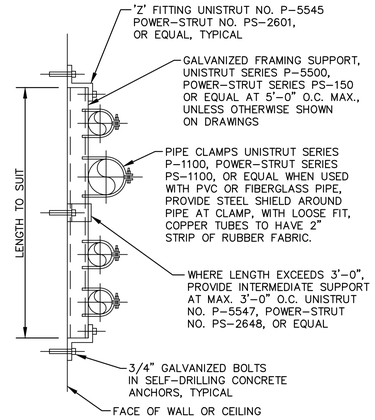

2 / 1.10 FLUSH MOUNTED PIPE SUPPORT

NOT TO SCALE

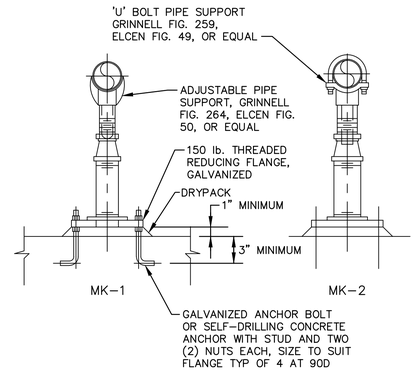

3 / 1.10 ADJUSTABLE PIPE SUPPORT

NOT TO SCALE

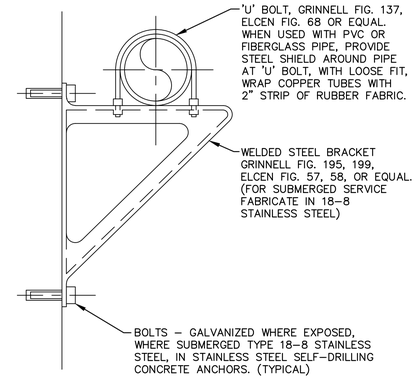

4 / 1.10 PIPE BRACKET

NOT TO SCALE

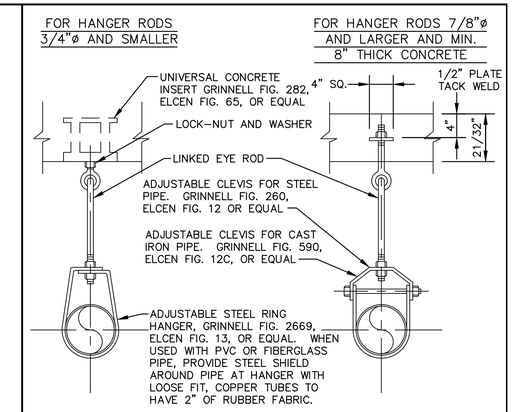

NOTE: 4" SQ. BEARING PLATE ALLOW 3800 lb. LOAD MAX.
CONCRETE INSERT ALLOW 1400 lb. LOAD MAX.

5 / 1.10 PIPE BRACKET

NOT TO SCALE

NOTE:
LIFTING CLEVIS TO BE INSTALLED ABOVE EACH PUMP, COMPRESSOR OR OTHER MAJOR EQUIPMENT. VERIFY LOCATIONS.

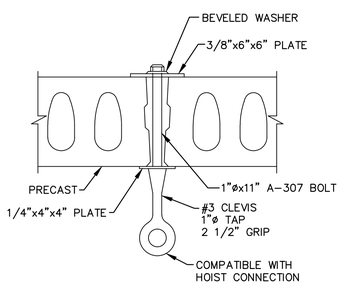

6 / 1.10 LIFTING HOOK IN PRECAST

NOT TO SCALE

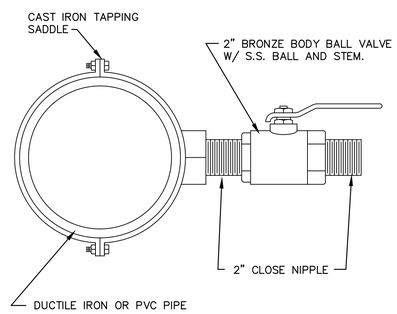

7 / 1.10 SAMPLE LINE CONNECTION

NOT TO SCALE

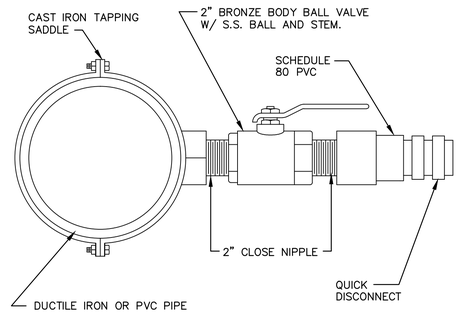

8 / 1.10 FLUSH OUT CONNECTION

NOT TO SCALE

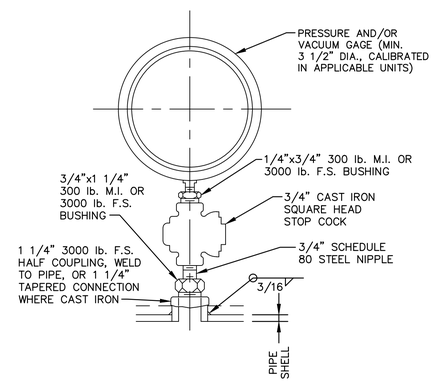

9 / 1.10 AIR PRESSURE AND/OR VACUUM GAUGE IN PIPE

NOT TO SCALE

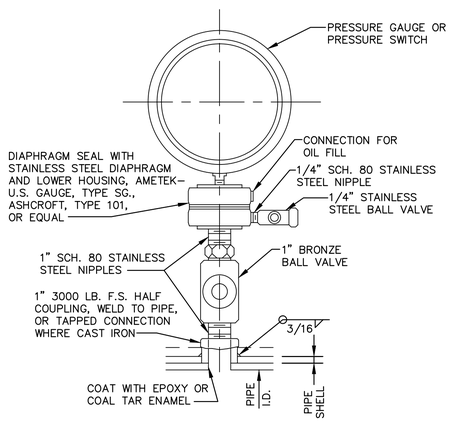

10 / 1.10 PRESSURE GAUGE OR PRESSURE SWITCH WITH DIAPHRAGM SEAL

NOT TO SCALE

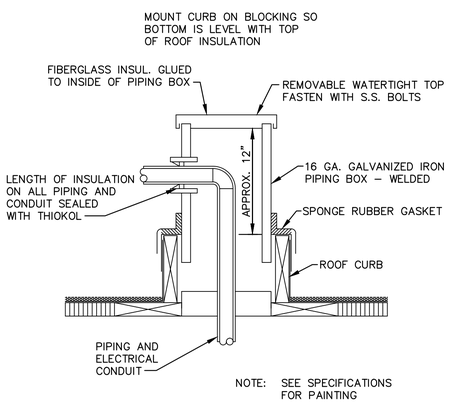

NOTE: SEE SPECIFICATIONS FOR PAINTING

11 / 1.10 ROOF PIPING BOX

NOT TO SCALE

SCALES SHOWN ON DRAWINGS ARE FOR 24"x36" SIZE SHEETS ONLY. DRAWINGS PLOTTED ON ANY OTHER SIZE SHEETS NEED TO HAVE SCALES ADJUSTED ACCORDINGLY

© Bolton & Menk, Inc. 2017, All Rights Reserved
H:\WIND\T22113672\CAD\ENV\113672_D_BASE_107-112-STANDARD-DETAILS.DWG 6/15/2017 9:47:45 AM

I HEREBY CERTIFY THAT THIS PLAN, SPECIFICATION OR REPORT WAS PREPARED BY ME OR UNDER MY DIRECT SUPERVISION, AND THAT I AM A DULY LICENSED PROFESSIONAL ENGINEER UNDER THE LAWS OF THE STATE OF MINNESOTA

SIGNATURE: Tejpal S. Bala TYPED OR PRINTED NAME: Tejpal Singh Bala

DATE 12/4/2017 LIC. NO. 49574

BOLTON & MENK

www.bolton-menk.com

REV.	BY	DATE
A	CAL	12/4/2017

CITY OF WINDOM, MINNESOTA

2017 WASTEWATER TREATMENT FACILITY IMPROVEMENTS

STANDARD DETAILS

SHEET 1.10

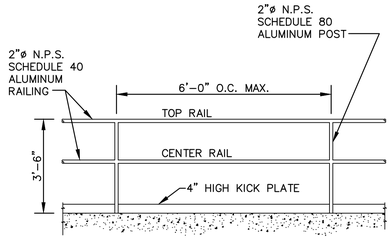

2 RAIL GUARDRAIL W/ KICK PLATE

1 / 1.11 RAILING DETAILS IN PROCESS AREAS

NOT TO SCALE

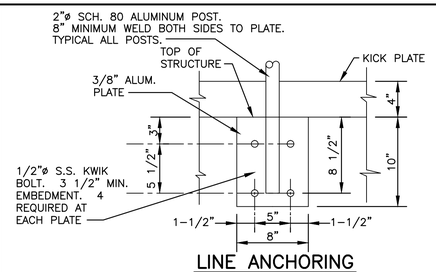

LINE ANCHORING

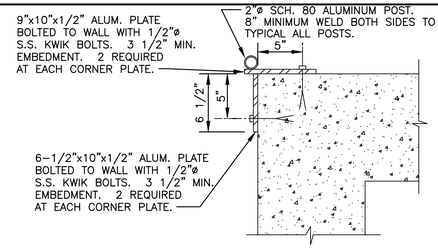

CORNER ANCHORING

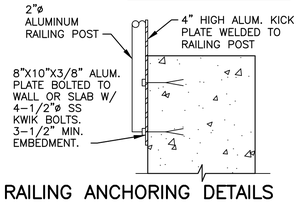

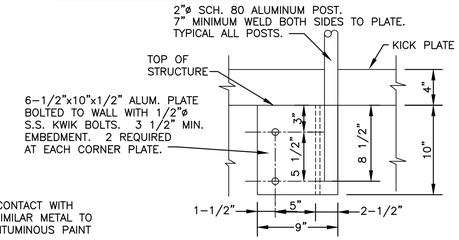

NOTE:
ALL ALUMINUM IN CONTACT WITH CONCRETE OR DISSIMILAR METAL TO BE COATED WITH BITUMINOUS PAINT

2 / 1.11 RAILING ANCHORING DETAILS

NOT TO SCALE

NOTE: ALL ALUMINUM IN CONTACT WITH CONCRETE OR DISSIMILAR METAL TO BE COATED WITH BITUMINOUS PAINT.

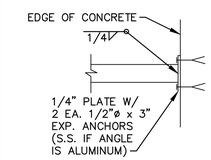

TYPICAL END CONNECTION PLAN

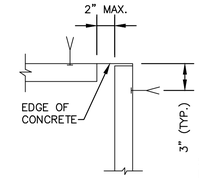

TYPICAL CORNER PLAN

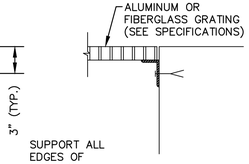

SECTION

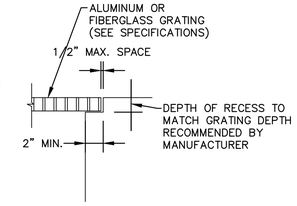

SECTION

ANGLES

-FOR ALUMINUM GRATING

ALUM. ∠2"x3"x1/4" WITH 1/2"ø x 3" S.S. EXP. ANCHORS @ 18" O.C. MAX.

-FOR FIBERGLASS GRATING

∠2"x2"x1/4" WITH 1/2"ø x 3" EXPANSION ANCHORS @ 18" O.C. MAX.

3 / 1.11 GRATING INSTALLATION

NOT TO SCALE

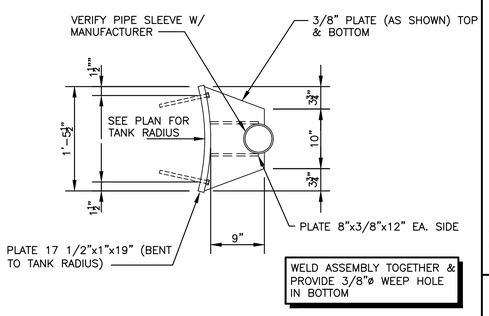

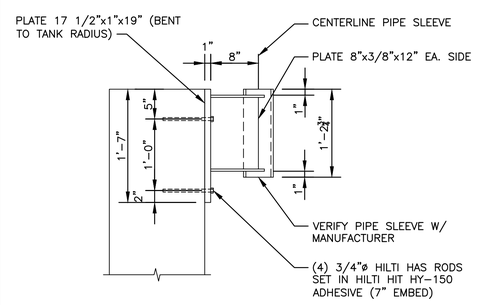

4 / 1.11 PORTABLE CRANE MOUNT ON TANKS

NOT TO SCALE

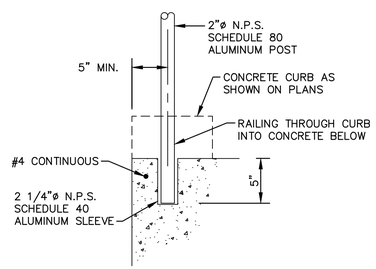

ANCHORING

5 / 1.11 RAILING DETAIL

NOT TO SCALE

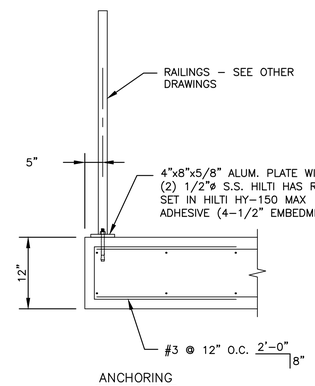

ANCHORING

6 / 1.11 RAILING DETAIL

NOT TO SCALE

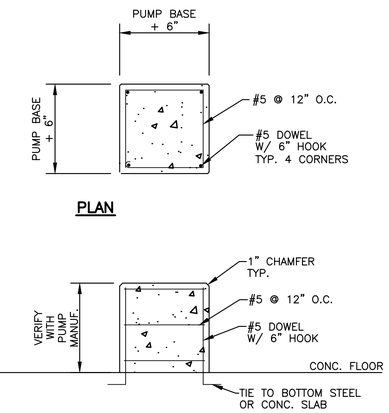

7 / 1.11 CONCRETE PUMP BASE

NOT TO SCALE

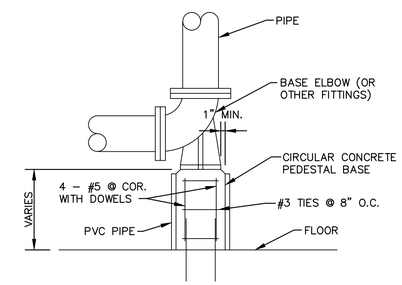

8 / 1.11 CONCRETE PEDESTAL BASE

NOT TO SCALE

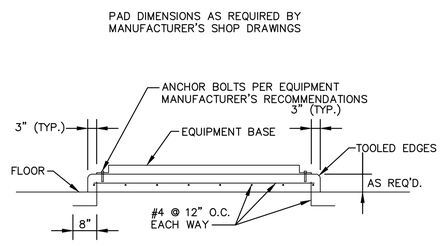

9 / 1.11 CONCRETE EQUIPMENT BASE

NOT TO SCALE

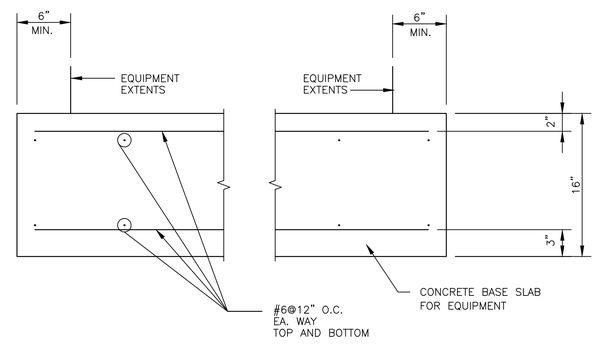

10 / 1.11 TYPICAL EQUIPMENT BASE SLAB

NOT TO SCALE

SCALES SHOWN ON DRAWINGS ARE FOR 24"x36" SIZE SHEETS ONLY. DRAWINGS PLOTTED ON ANY OTHER SIZE SHEETS NEED TO HAVE SCALES ADJUSTED ACCORDINGLY

© Bolton & Menk, Inc. 2017, All Rights Reserved
H:\WIND\T22113672\CAD\ENV\113672_D_BASE_107-112-STANDARD-DETAILS.DWG 6/15/2017 9:47:45 AM

I HEREBY CERTIFY THAT THIS PLAN, SPECIFICATION OR REPORT WAS PREPARED BY ME OR UNDER MY DIRECT SUPERVISION, AND THAT I AM A DULY LICENSED PROFESSIONAL ENGINEER UNDER THE LAWS OF THE STATE OF MINNESOTA

SIGNATURE: Tejpal S. Bala TYPED OR PRINTED NAME: Tejpal Singh Bala

DATE 12/4/2017 LIC. NO. 49574

BOLTON & MENK

www.bolton-menk.com

REV.	BY	DATE
A	CAL	12/4/2017

CITY OF WINDOM, MINNESOTA

2017 WASTEWATER TREATMENT FACILITY IMPROVEMENTS

STANDARD DETAILS

SHEET 1.11

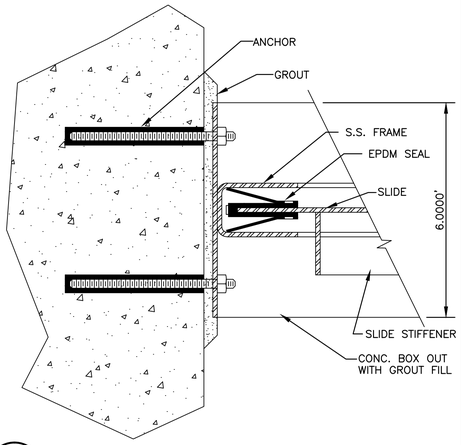

1 / 1.12 SLIDE GATE–SURFACE MOUNT SIDE
SCALE: 1/2"=1'–0"

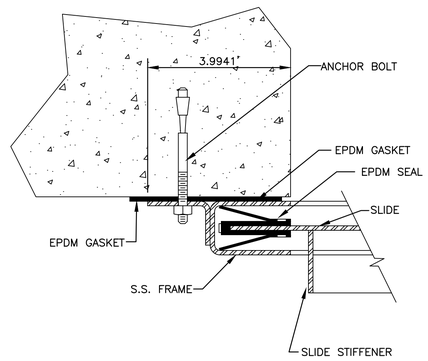

2 / 1.12 SLIDE GATE–WALL MOUNT SIDE
SCALE: 1/2"=1'–0"

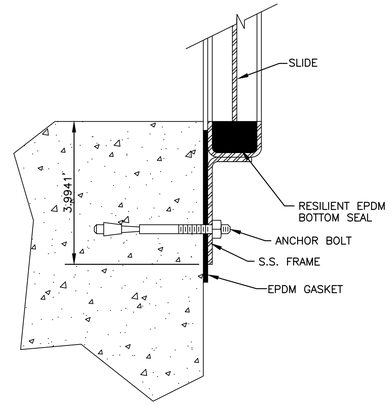

3 / 1.12 SLIDE GATE–WALL MOUNT BOTTOM
SCALE: 1/2"=1'–0"

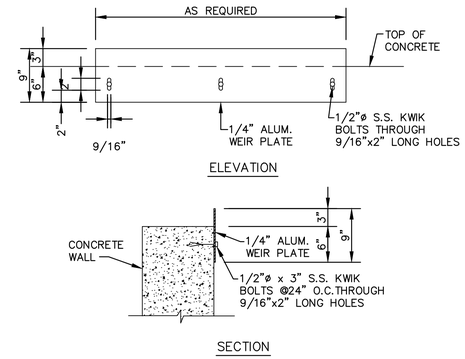

4 / 1.12 WEIR PLATE
SCALE: 1"=1'–0"

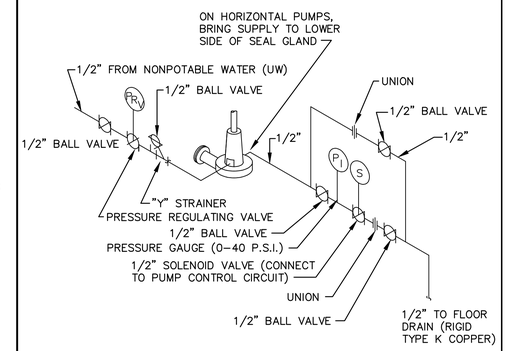

NOTE: VERIFY CONFIGURATION WITH PUMP MANUFACTURER

5 / 1.12 PUMP SEAL WATER SCHEMATIC
SCALE: 3/8"=1'–0"

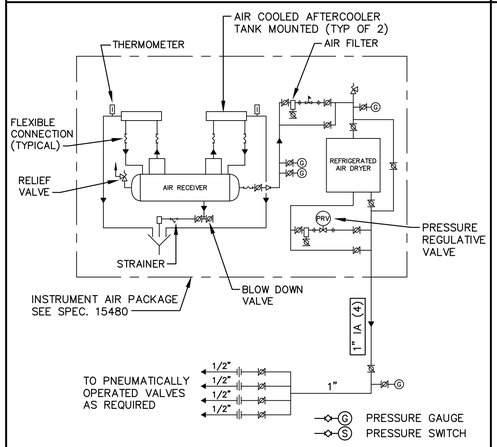

6 / 1.12 INSTRUMENT/PLANT AIR SCHEMATIC
NO SCALE

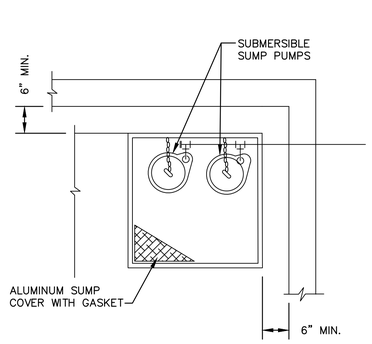

PLAN

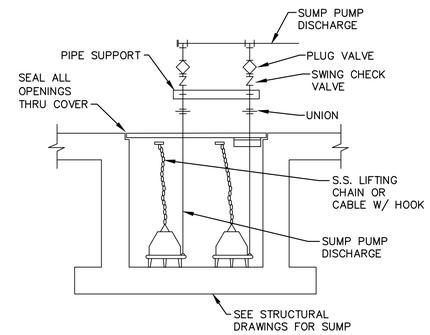

SECTION

7 / 1.12 DRAINAGE SUMP WITH DUPLEX PUMPS
SCALE: 3/4"=1'–0"

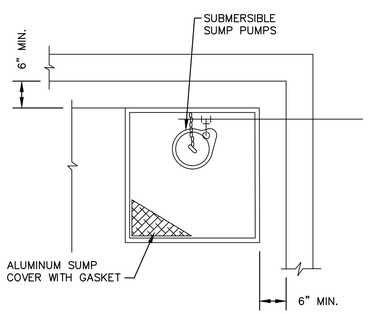

PLAN

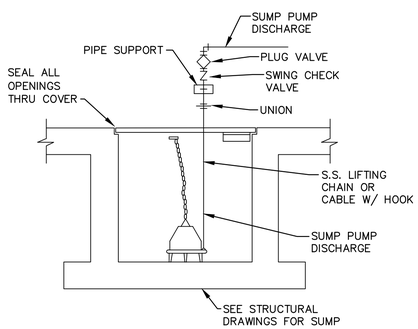

SECTION

8 / 1.12 DRAINAGE SUMP WITH PUMP
SCALE: 3/4"=1'–0"

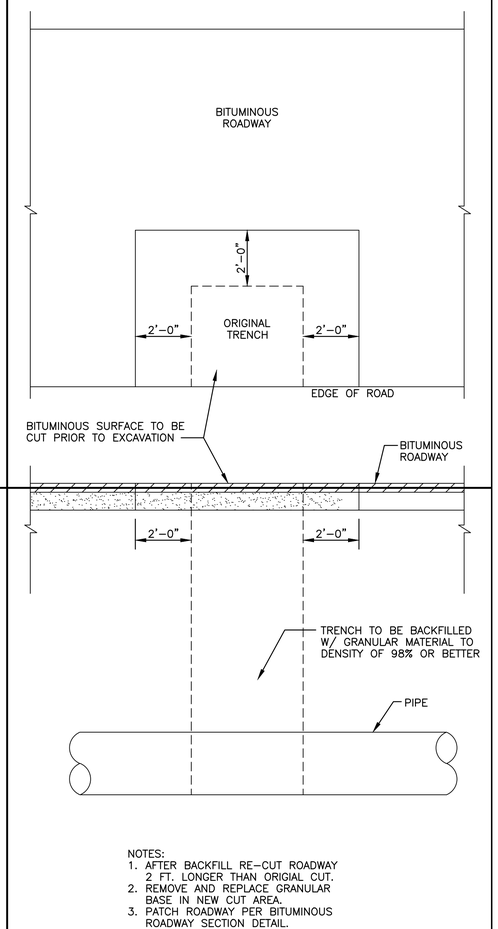

NOTES:
1. AFTER BACKFILL RE–CUT ROADWAY 2 FT. LONGER THAN ORIGIAL CUT.
2. REMOVE AND REPLACE GRANULAR BASE IN NEW CUT AREA.
3. PATCH ROADWAY PER BITUMINOUS ROADWAY SECTION DETAIL.

9 / 1.12 BITUMINOUS REPAIR FOR TRENCH
NO SCALE

SCALES SHOWN ON DRAWINGS ARE FOR 24"x36" SIZE SHEETS ONLY. DRAWINGS PLOTTED ON ANY OTHER SIZE SHEETS NEED TO HAVE SCALES ADJUSTED ACCORDINGLY

© Bolton & Menk, Inc. 2017, All Rights Reserved
H:\WIND\T22113672\CAD\ENV\113672_D_BASE_107–112–STANDARD–DETAILS.DWG 6/15/2017 9:47:45 AM

I HEREBY CERTIFY THAT THIS PLAN, SPECIFICATION OR REPORT WAS PREPARED BY ME OR UNDER MY DIRECT SUPERVISION, AND THAT I AM A DULY LICENSED PROFESSIONAL ENGINEER UNDER THE LAWS OF THE STATE OF MINNESOTA

SIGNATURE: Tejpal S. Bala TYPED OR PRINTED NAME: Tejpal Singh Bala
DATE 12/4/2017 LIC. NO. 49574

BOLTON & MENK
www.bolton–menk.com

REV.	BY	DATE
A	CAL	12/4/2017

CITY OF WINDOM, MINNESOTA
2017 WASTEWATER TREATMENT FACILITY IMPROVEMENTS
STANDARD DETAILS

SHEET 1.12

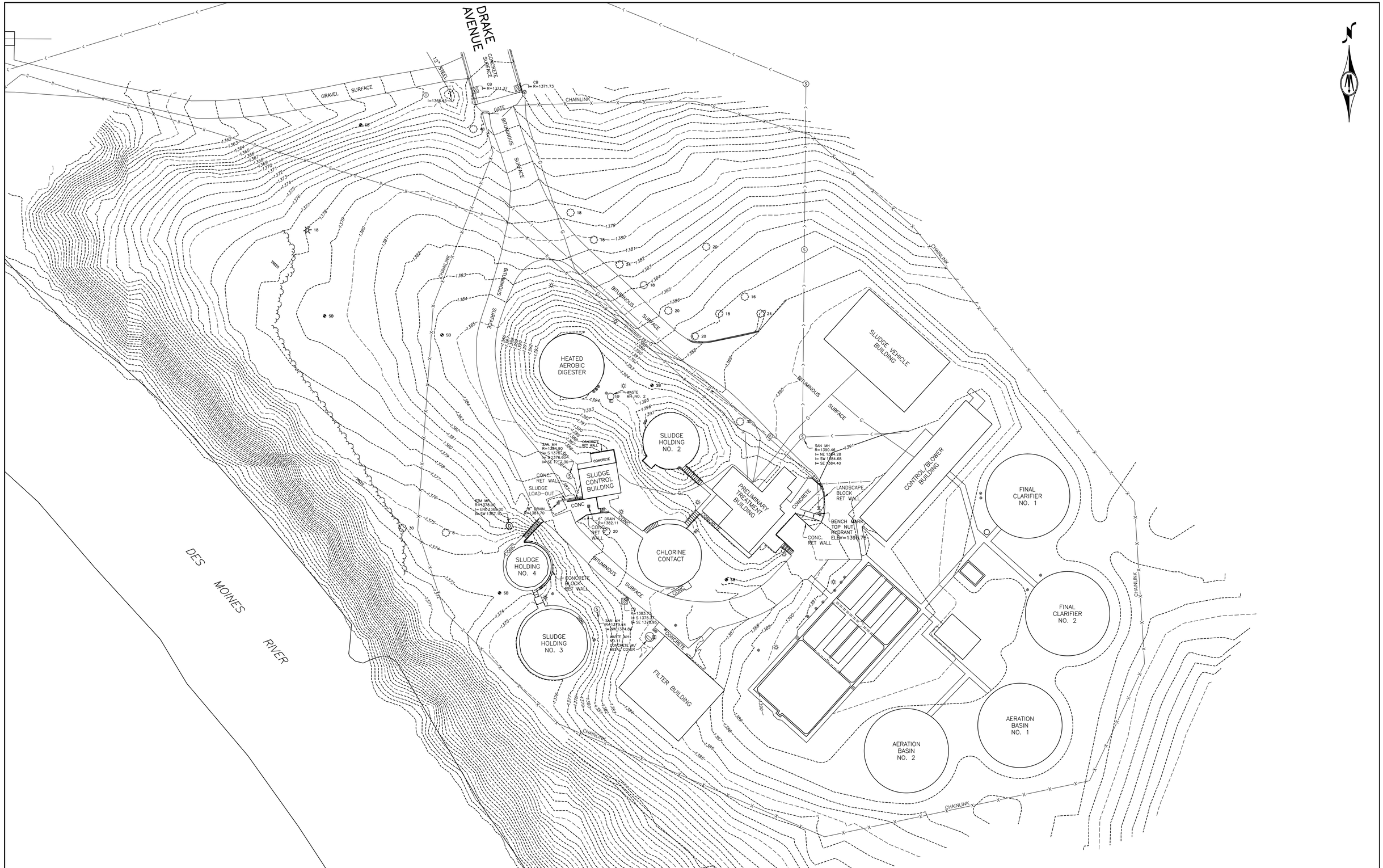

SCALES SHOWN ON DRAWINGS ARE FOR 24"x36" SIZE SHEETS ONLY. DRAWINGS PLOTTED ON ANY OTHER SIZE SHEETS NEED TO HAVE SCALES ADJUSTED ACCORDINGLY

© Bolton & Menk, Inc. 2017, All Rights Reserved

30 0 30 60

Graphic Scale for 1"=30'

I HEREBY CERTIFY THAT THIS PLAN, SPECIFICATION OR REPORT WAS PREPARED BY ME OR UNDER MY DIRECT SUPERVISION, AND THAT I AM A DULY LICENSED PROFESSIONAL ENGINEER UNDER THE LAWS OF THE STATE OF MINNESOTA

SIGNATURE: Tejpal S. Bala TYPED OR PRINTED NAME: Tejpal Singh Bala

DATE 12/4/2017 LIC. NO. 49574

BOLTON & MENK

www.bolton-menk.com

REV.	BY	DATE
A	CAL	12/4/2017

CITY OF WINDOM, MINNESOTA

2017 WASTEWATER TREATMENT FACILITY IMPROVEMENTS

EXISTING SITE PLAN

SHEET 2.01

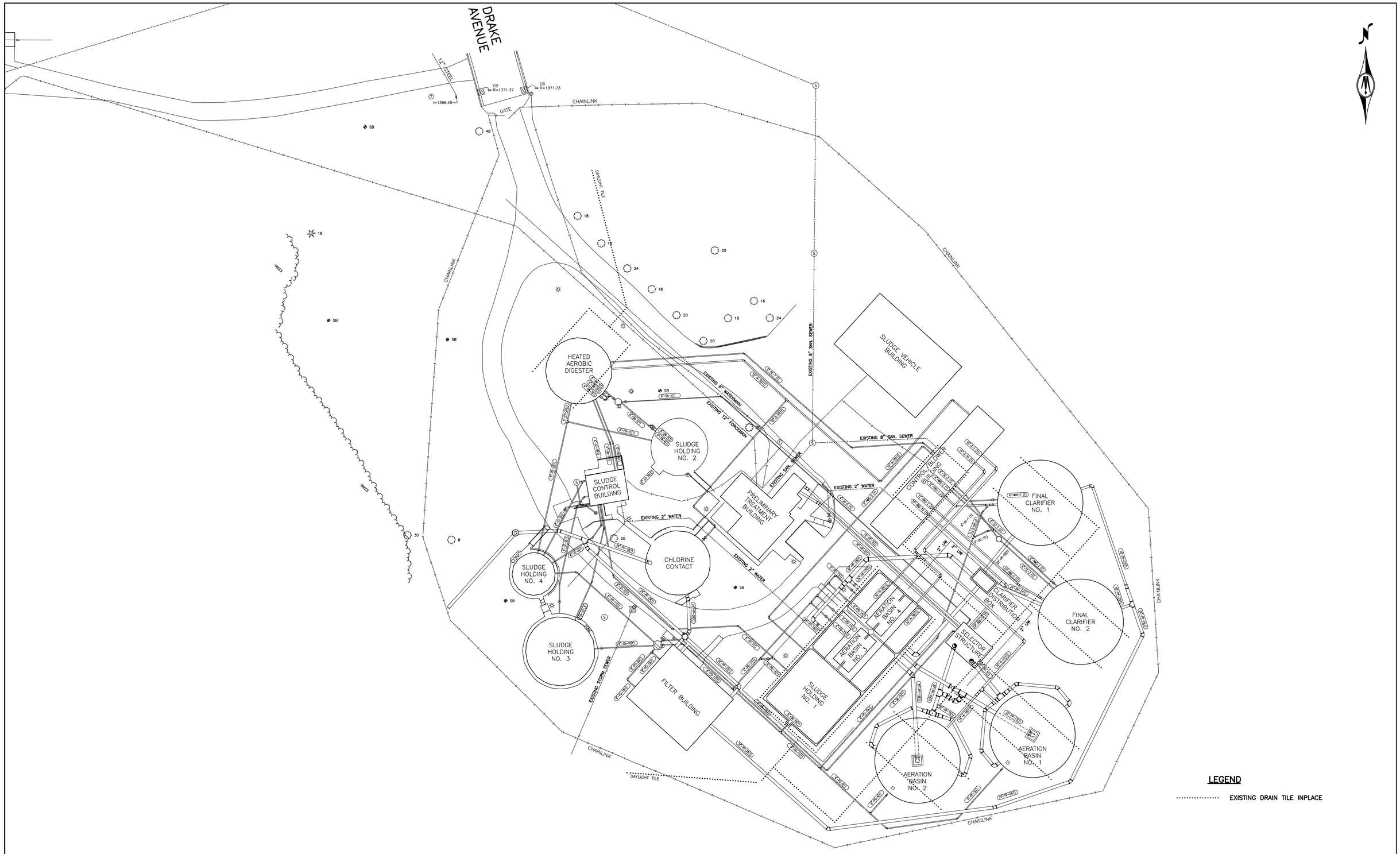

LEGEND

..... EXISTING DRAIN TILE INPLACE

SCALES SHOWN ON DRAWINGS ARE FOR 24"x36" SIZE SHEETS ONLY. DRAWINGS PLOTTED ON ANY OTHER SIZE SHEETS NEED TO HAVE SCALES ADJUSTED ACCORDINGLY

© Bolton & Menk, Inc. 2017, All Rights Reserved

30 0 30 60

Graphic Scale for 1"=30'

I HEREBY CERTIFY THAT THIS PLAN, SPECIFICATION OR REPORT WAS PREPARED BY ME OR UNDER MY DIRECT SUPERVISION, AND THAT I AM A DULY LICENSED PROFESSIONAL ENGINEER UNDER THE LAWS OF THE STATE OF MINNESOTA

SIGNATURE: Tejpal S. Bala TYPED OR PRINTED NAME: Tejpal Singh Bala

DATE 12/4/2017 LIC. NO. 49574

BOLTON & MENK

www.bolton-menk.com

REV.	BY	DATE
A	CAL	12/4/2017

CITY OF WINDOM, MINNESOTA

2017 WASTEWATER TREATMENT FACILITY IMPROVEMENTS

EXISTING SITE PIPING PLAN

SHEET 2.02

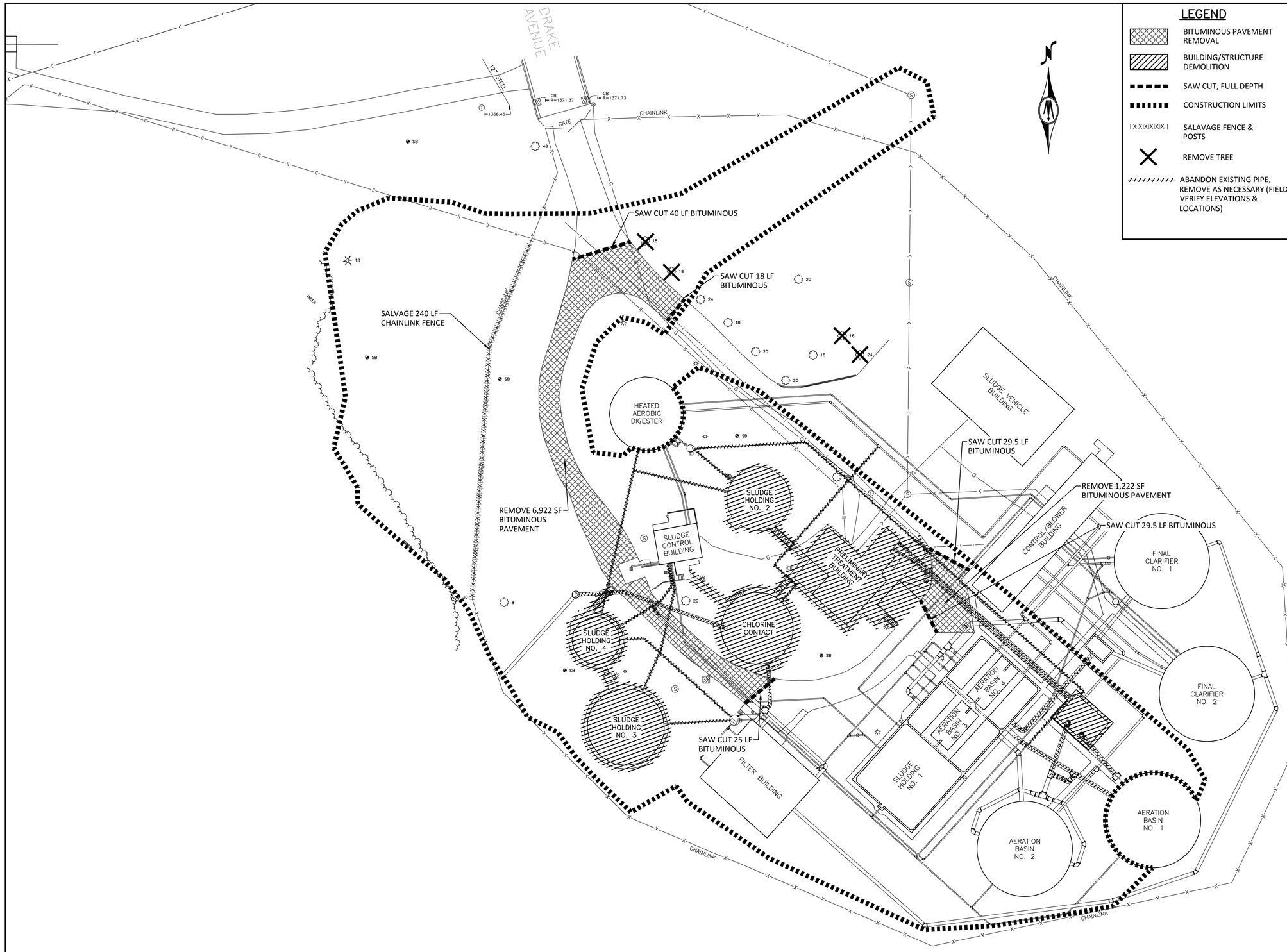

LEGEND

- BITUMINOUS PAVEMENT REMOVAL
- BUILDING/STRUCTURE DEMOLITION
- SAW CUT, FULL DEPTH
- CONSTRUCTION LIMITS
- SALAVAGE FENCE & POSTS
- REMOVE TREE
- ABANDON EXISTING PIPE, REMOVE AS NECESSARY (FIELD VERIFY ELEVATIONS & LOCATIONS)

NOTES:

1. INSTALL EROSION CONTROL MEASURES PRIOR TO
2. COMMENCING CONSTRUCTION.
3. TOPSOIL SALVAGED AND STOCKPILED FOR USE ONSITE.
4. ALL ELEVATIONS ARE TO TOP OF FINISHED GRADE UNLESS OTHERWISE NOTED.
5. REMOVE SEDIMENT AND EROSION CONTROL
6. MEASURES ONCE TURF ESTABLISHMENT IS ACCEPTED.
7. PROTECT EXISTING FACILITIES TO REMAIN.
6. BULKHEAD AND FILL ALL EXISTING PIPES TO BE
7. ABANDONED IN PLACE.
8. SAWCUT PAVEMENT FULL DEPTH PRIOR TO REMOVAL (INCIDENTAL).
9. REMOVALS SHALL NOT OCCUR WITHOUT AUTHORIZATION FROM THE ENGINEER. REMOVAL LIMITS AND REMOVAL ITEMS SHALL BE VERIFIED BY ENGINEER PRIOR TO REMOVAL.

SCALES SHOWN ON DRAWINGS ARE FOR 24"x36" SIZE SHEETS ONLY. DRAWINGS PLOTTED ON ANY OTHER SIZE SHEETS NEED TO HAVE SCALES ADJUSTED ACCORDINGLY

© Bolton & Menk, Inc. 2018, All Rights Reserved
H:\WIND\T22113672\CAD\ENV\113672_D_BASE_203-DEMO.DWG 5/10/2018 9:42:13 PM

30 0 30 60
Graphic Scale for 1"=30'

I HEREBY CERTIFY THAT THIS PLAN, SPECIFICATION OR REPORT WAS PREPARED BY ME OR UNDER MY DIRECT SUPERVISION, AND THAT I AM A DULY LICENSED PROFESSIONAL ENGINEER UNDER THE LAWS OF THE STATE OF MINNESOTA

SIGNATURE: _____ TYPED OR PRINTED NAME: Tejpal Singh Bala

DATE 12/4/2017 LIC. NO. 49574

BOLTON & MENK

www.bolton-menk.com

REV.	BY	DATE
A	CAL	12/4/2017

CITY OF WINDOM, MINNESOTA

2017 WASTEWATER TREATMENT FACILITY IMPROVEMENTS

PROPOSED SITE DEMOLITION AND REMOVALS PLAN

SHEET 2.03

STORMWATER POLLUTION PREVENTION PLAN (SWPPP)

2017 WASTEWATER TREATMENT FACILITY IMPROVEMENTS

CITY OF WINDOM
COTTONWOOD COUNTY, MINNESOTA

UNIVERSITY OF MINNESOTA

JOSEPH PELAWA

Design of Construction SWPPP (May 31, 2020)

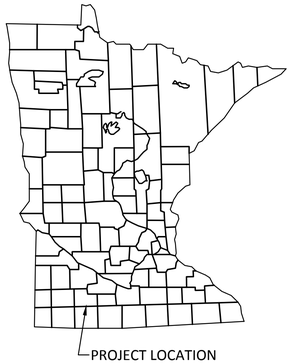

LEGEND

- PROJECT BOUNDARY
- RECEIVING WATERS
- IMPAIRED WATERS

PROJECT AREAS:

Total Project Size (disturbed area) =	2.0	ACRES
Existing area of impervious surface =	1.8	ACRES
Post construction area of impervious surface =	2.05	ACRES
Total new impervious surface area created =	0.25	ACRES

Planned Construction Start Date: 5/1/2018
Estimated Construction Completion Date: 7/1/2019

PERMANENT STORMWATER MANAGEMENT SYSTEM:
Type of storm water management used if more than 1 acre of new impervious surface is created:

	Wet Sedimentation Basin
	Infiltration/Filtration
	Regional Pond
X	Permanent Stormwater Management Not Required

Less than 1 acre of new impervious surface is created with this facility improvement.

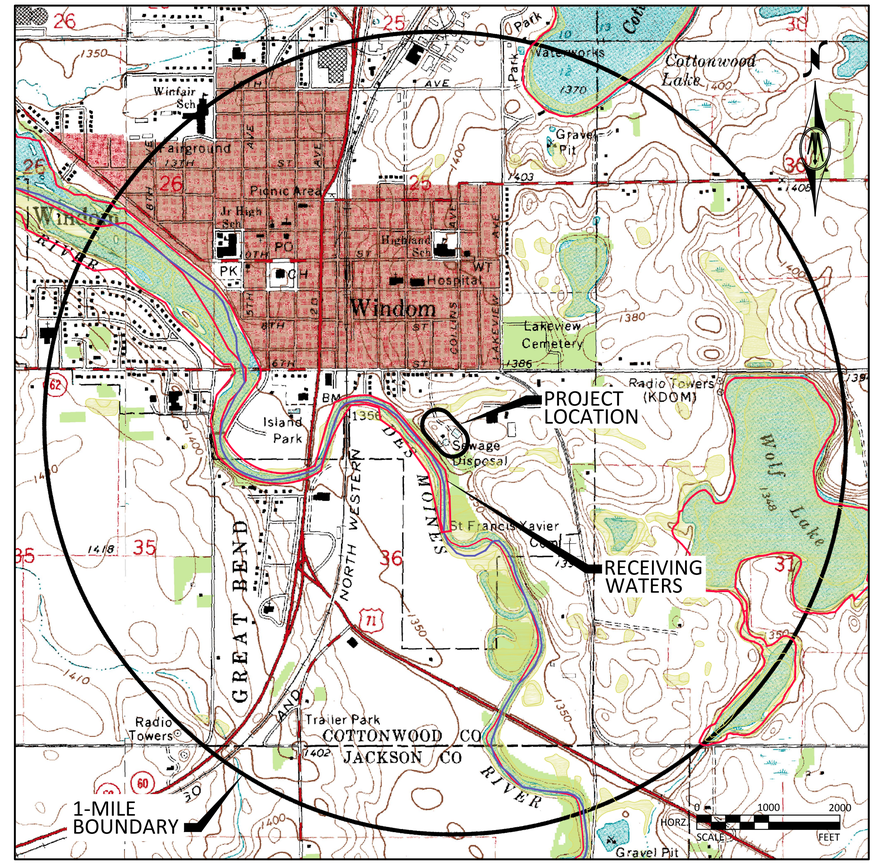

RESPONSIBLE PARTIES:
The Contractor and Owner must apply for coverage under the MPCA's General Stormwater Permit for Construction Activity as required by the National Pollutant Discharge Elimination System (NPDES) Phase II program. Coverage under the permit will begin automatically 7 calendar days after the electronic submittal date or after the postmarked date of a complete application. [Longer time frames apply to sites that disturb areas greater than 50 acres.]

The Contractor shall provide one or more trained Construction SWPPP Manager(s) knowledgeable and experienced in the application of erosion prevention and sediment control BMPs that will oversee the implementation of the SWPPP, and the installation, inspection and maintenance of the erosion prevention and sediment control BMPs. A Construction SWPPP Manager must be available for an on-site inspection within 72 hours upon request by the MPCA.

	COMPANY	CONTACT PERSON	PHONE
OWNER:	CITY OF WINDOM	MIKE HAUGEN	507-831-6138
SWPPP DESIGNER:	Bolton & Menk, Inc.	JOSEPH PELAWA	763.433.2851
CONTRACTOR:	TBD		
CONSTRUCTION SWPPP MANAGER:	TBD		
PARTY RESPONSIBLE FOR LONG TERM O&M:	CITY OF WINDOM	MIKE HAUGEN	507-831-6138

The SWPPP Designer and Construction SWPPP Manager must have appropriate training. Documentation showing training commensurate with the job duties and responsibilities is required to be included in the SWPPP prior to any work beginning on the site. Training documentation for the SWPPP Designer is included on this sheet. The Contractor shall attach training documentation to this SWPPP for the Construction SWPPP Manager prior to the start of construction. This information shall be kept up to date until the project NOT is filed.

ADDITIONAL COMPENSATION
Payment for all work associated with Erosion and Sediment Control shall be as described in the Project Manual. Unless otherwise authorized by the Owner no additional payment shall be made for any work required to administer and maintain the site erosion and sediment control in compliance with the Minnesota Pollution Control Agency (MPCA) - General Stormwater Permit for Construction Activity (MN R100001) including but not limited to inspection, maintenance, and removal of BMPs or addition of BMPs to accommodate Contractor phasing.

SPECIAL ENVIRONMENTAL CONSIDERATIONS:

1)	Was an environmental review required for this project or any part of a common plan of development or sale that includes all or any portion of this project?	NO
2)	Does any portion of the site have the potential to affect threatened or endangered species or their critical habitat?	NO
3)	Does any portion of this site discharge to a Calcareous fen.	NO
4)	Will any portion of the site potentially affect properties listed on the National Register of Historic Places or a known or discovered archeological site?	NO
5)	Have any Karst features have been identified in the project vicinity?	NO
6)	Is compliance with temporary or permanent stormwater management design requirements infeasible for this project?	NO
7)	Has the MN DNR promulgated "work in water restrictions" for any Public Water this site disharges to during fish spawning?	NO

GENERAL STORMWATER DISCHARGE REQUIREMENTS
All requirements listed in Part III of the Permit for the design of the permanent stormwater management system and discharge have been included in the preparation of this SWPPP. These include but are not limited to::

1. The expected amount, frequency, intensity, and duration of precipitation.
2. The nature of stormwater runoff and run-on at the site
3. Peak flow rates and stormwater volumes to minimize erosion at outlets and downstream channel and stream bank erosion.
4. The range of soil particle sizes expected to be present on the site.

PROJECT LOCATION:

COUNTY	TOWNSHIP	RANGE	SECTION	LATITUDE	LONGITUDE
COTTONWOOD	105 N	36 W	36	43.8600	-95.1080

BMP SUMMARY	QUANTITY	UNIT
SEDIMENT CONTROL: SILT FENCE	1,253	LF
SEDIMENT CONTROL: BIO LOGS	100	LF
CONSTRUCTION EXIT SEDIMENT TRACKOUT CONTROL	1	EACH
EROSION CONTROL BLANKET	2,694	SY
TURF RESTORATION	2.0	ACRES

DESCRIPTION OF CONSTRUCTION ACTIVITIES AND STORMWATER MANAGEMENT:
Construction activities include: Site grading, sanitary sewer and water main extensions, temporary erosion and sediment control, and permanent stabilization.

This project will consist of expansion of treatment facilities and site grading at the existing wastewater treatment facility. Work will consist of excavation for the removal and construction of treatment structures, site grading, sewer and watermain extensions and access road improvements.

All modifications to this SWPPP shall be approved by the Engineer and remain on site during construction.

DOCUMENT RETENTION
The following documentation will be retained for a period of not less than 3-years from the date of submittal of the NOT in compliance with Part III.E of the Permit.

1. The final SWPPP
2. Copies of all stormwater related permits required for the project
3. Records of all inspection and maintenance conducted during construction
4. Copies of all permanent operation and maintenance agreements; including all right-of-way, contracts, covenants and other binding requirements regarding perpetual maintenance, and
5. All required calculations for design of the temporary and permanent BMPs.

RECEIVING WATERS:
Receiving waters, including surface water, wetlands, Public Waters, and stormwater ponds, are identified on the USGS 7.5 min quad map within one mile of the project boundary. Receiving waters that are impaired, the impairment, and WLA are listed as follows. All specific BMPs relative to construction activities listed in this permit for special and impaired waters have been incorporated into this plan. All specific BMPs listed in approved TMDLs and those BMPs listed for construction related waste load allocations have also been incorporated.

NAME OF WATER BODY	TYPE (ditch, pond, wetland, lake, etc.)	Appendix A Special Water?	Flows to Impaired Water Within 1 Mile?	USEPA Approved TMDL?
Des Moines River	River	No	Yes	Yes
Impairments: Fecal Coliform, Turbidity, Ammonia, Dissolved Oxygen				

IMPLEMENTATION SCHEDULE AND PHASING: The Contractor is required to provide an updated schedule and site management plan meeting the minimum requirements of Section 1717.2.C and 1717.2.D of the Minnesota 2016 Standard Specifications.

1) Submit SWPPP Updates to Engineer. Submittal shall include any requested changes to the SWPPP, including but not limited to: Trained Personnel, Locations for Stockpiles, Concrete Washout, Sanitation Facilities, Types and Locations of Erosion & Sediment Control. Failure to submit updates shall be considered acceptance of the SWPPP as designed with no changes.
2) Install perimeter sediment control, inlet protection, and construction exit.
3) Install sediment control to ensure sediment does not leave site.
4) Add additional temporary BMPs as necessary during construction based on inspection reports and construction activities.
5) Ensure final stabilization measures are complete.
6) Provide digital copy of all Field SWPPP Documentation including Inspection Reports and SWPPP Revisions to the Owner.
7) Submit Notice of Termination (NOT) to MPCA. NOTE: The NOT must be submitted to MPCA before Final Stabilization is considered complete.

Owner must submit the application for coverage and the Storm Water Pollution Prevention Plan at least 30-days before the construction start date. The SWPPP can be attached electronically when using the online application.

SCALES SHOWN ON DRAWINGS ARE FOR 24"x36" SIZE SHEETS ONLY. DRAWINGS PLOTTED ON ANY OTHER SIZE SHEETS NEED TO HAVE SCALES ADJUSTED ACCORDINGLY

© Bolton & Menk, Inc. 2017, All Rights Reserved

H:\WIND\T22113672\CAD\ENV\113672_D_BASE_SWPPP-LOC-MAP.dwg 12/12/2017 9:21 AM

I HEREBY CERTIFY THAT THIS PLAN, SPECIFICATION OR REPORT WAS PREPARED BY ME OR UNDER MY DIRECT SUPERVISION, AND THAT I AM A DULY LICENSED PROFESSIONAL ENGINEER UNDER THE LAWS OF THE STATE OF MINNESOTA

SIGNATURE: TYPED OR PRINTED NAME: Joseph D. Pelawa
DATE 12/4/2017 LIC. NO. 42603

BOLTON & MENK
www.bolton-menk.com

REV.	BY	DATE
A	CAL	12/4/2017

CITY OF WINDOM, MINNESOTA
2017 WASTEWATER TREATMENT FACILITY IMPROVEMENTS
STORM WATER POLLUTION PREVENTION PLAN
PROJECT LOCATION MAP

SHEET 2.04

Information contained in this SWPPP narrative sheet summarizes requirements of the GENERAL PERMIT AUTHORIZATION TO DISCHARGE STORMWATER ASSOCIATED WITH CONSTRUCTION ACTIVITY UNDER THE NATIONAL POLLUTANT DISCHARGE ELIMINATION SYSTEM/STATE DISPOSAL SYSTEM PROGRAM - Permit No: MN Rl0000l as they apply to this project. All provisions of the permit including those not specifically cited herein shall apply to this project. The Contractor is responsible to be familiar with and comply with all conditions of the permit. The full text of the permit is available at: http://www.pca.state.mn.us/index.php/water/water-types-and-programs/stormwater/construction-stormwater/mpca-to-re-issue-construction-stormwater-general-permit.html.

SWPPP AMENDMENTS

Permittee must amend SWPPP as necessary to include additional requirements to correct problems identified or address the following situations.

1. There is a change in design, construction, operation, maintenance, weather or seasonal conditions.
2. Inspections or investigations by site owner or operators, USEPA or MPCA officials determine the SWPPP is not minimizing discharge of pollutants to surface waters or underground waters or discharges are causing water quality standard exceedances.
3. The SWPPP is not achieving the objectives of minimizing pollutants in stormwater discharges associated with construction activity, or the SWPPP is not consistent with the terms and conditions of the permit.
4. The MPCA determines that the project's stormwater discharges may cause, have reasonable potential to cause, or contribute to non-attainment of any applicable water quality standard, or the SWPPP does not incorporate the applicable requirements of the permit.

EROSION PREVENTION PRACTICES:

The location of areas not to be disturbed must be delineated on the project before site work begins.

Disturbance on steep slopes (>33.3%) shall be minimized. Where required, techniques such as phasing and stabilizing practices designed for steep slopes shall be used.

All exposed soils must be stabilized as soon as possible but in no case later than 7 days after the construction activity has temporarily or permanently ceased.

For public waters that have been promulgated "work in water restrictions" during fish spawning time frames, all exposed soil areas that are within 200 feet of the water's edge, and drain to these waters must complete stabilization within 24-hours during the time period.

Stormwater conveyance channels shall be routed around unstabilized areas. Erosion controls and velocity dissipation devices shall be used at outlets within and along the length of any constructed conveyance channel.

The normal wetted perimeter of all ditches or swales, including storm water management pond slopes, that drain waters from the site must be stabilized within 200' of any property edge or discharge point, including storm sewer inlets, within 24 hours of connection.

Stabilization of the remaining portions of any temporary or permanent ditches or swales with 7 calendar days after connecting to a surface water or property edge and construction in that portion of the ditch has temporary or permanently ceased.

Temporary or permanent ditches or swales used as sediment containment during construction do not need to be stabilized during temporary period of use and shall be stabilized within 24 hours after no longer used as sediment containment.

Mulch, hydromulch, tackifier, or similar practice shall not be used in any portion of a temporary or permanent drainage ditch. Refer to erosion and sediment control plan for temporary and permanent stabilization measures for ditches and swales.

Stormwater discharges shall be directed to vegetated areas where feasible. Velocity dissipation devices shall be used at discharge point.

Phased construction will be used to extent practical or as indicated in the plans to minimize exposed soils.

Rapid stabilization shall be of type and quantity indicated in the project specifications. Additional rapid stabilization may be necessary to minimize erosion throughout the duration of the project. Type and quantity shall be determined by the engineer or inspector prior to installation. In extreme cases, the contractor shall use any available rapid stabilization to immediately mitigate erosion, then further remedy the situation with approval by owner or engineer.

SEDIMENT CONTROL PRACTICES:

Practices must be established on all down gradient perimeters and be located up gradient of any buffer zones. Perimeter controls must be in place before up gradient land- disturbing activities begin and shall remain in place until final stabilization.

All sediment controls practices shall be re-installed if they have been adjusted or removed to accommodate short-term activities and replaced immediately after the short term activity has ceased. Short term activities shall be performed as quickly as possible. Sediment control practices shall be re-installed even before the next precipitation event if the activity is not complete.

All storm drains must be protected by appropriate BMPs during construction until all sources to the inlet have been stabilized. Inlet protection may be removed for specific safety concerns identified by the Permittee or jurisdictional authority. The removal shall be documented in the SWPPP and retained on site. Temporary stockpiles must have silt fence or other effective sediment controls and shall not be placed in surface waters or natural buffers.

Vehicle tracking BMPs shall be installed to minimize track out of sediment from the construction site. Method shall be approved by engineer prior to commencement of construction activities. Street sweeping shall be used if vehicle tracking BMPs are not adequate to prevent sediment from being tracked onto the street.

Soil compaction shall be minimized and topsoil shall be preserved, unless infeasible or if construction activities dictate soil compaction or topsoil stripping.

A 100 foot natural buffer, or redundant BMPs (where a buffer is infeasible) must be maintained when a surface water is located within 100 feet of disturbance activities and site runoff flows to the surface water.

If polymers, flocculants, or other sedimentation treatment chemicals are used on site, 1) conventional erosion and sediment controls shall be sowed prior to chemical placement, 2) chemicals shall be chosen based on soil types, and expected turbidity, pH, and flow rate of stormwater flowing into the treatment system, and 3) chemicals shall be used with accepted engineering practices and dosing specifications.

TEMPORARY SEDIMENTATION BASINS:

The temporary sedimentation basin shall be constructed and made operational prior to disturbance of 5 or more acres draining to a common location.

Temporary sedimentation basins are required prior to runoff leaving the construction site or entering surface waters when 5 or more acres of disturbed soils drain to a common location. The basin must provide 3,600 cubic feet of storage below the outlet per acre drained. If hydraulic calculations are available, the temporary sedimentation basin must provide a storage volume equivalent to the 2-year, 24-hour storm, but in no case less than 1800 cubic feet per acre drained. The temporary sedimentation basin must be constructed and made operational concurrent with the start of soil disturbance up gradient of the pond. The temporary sedimentation basin shall be designed to prevent short circuiting. The outfall shall be designed to remove floatable debris, allow for complete drawdown of the pond for maintenance activities, and have energy dissipation. The emergency spillway shall be stabilized.

Temporary sedimentation basins shall be situated outside of surface waters and any required buffer zone, and must be designed to avoid draining wetlands, unless the impact is in compliance with the requirements of this permit.

Excessive sediment-laden water that is not properly filtered will not be permitted to discharge from site.

DEWATERING AND BASIN DRAINING

Turbid or sediment-laden waters related to dewatering or basin draining shall be discharged to a temporary or permanent sedimentation basin on the project site unless infeasible. The temporary or permanent basin may discharge to surface waters if the basin water has been visually checked to ensure adequate treatment has been obtained in the basin and that the nuisance conditions will not result from the discharge. Discharge points shall be adequately protected from erosion and proper velocity dissipation provided.

All water from dewatering or basin-draining activities must be discharged in a manner that does not cause nuisance conditions, erosion in the receiving channels or on down slope properties, or inundation in wetlands causing significant adverse impacts to the wetland.

If filters with backwash waters are used, the backwash water shall be hauled away for disposal, returned to the beginning of the treatment process, or incorporated into site in a manner that does not cause erosion. Backwash water may be discharged to sanitary sewer if permission is granted by the sanitary sewer authority.

POLLUTION PREVENTION:

Building products that have the potential to leach pollutants must be under cover to prevent discharge or protected by an effective means designed to minimize contact with stormwater.

Pesticides, herbicides, insecticides, fertilizers, treatment chemicals, and landscape materials must be under cover.

Hazardous materials and toxic waste must be properly stored in sealed containers to prevent spills, leaks or other discharge. Restricted access storage areas must be provided to prevent vandalism.

Solid waste must be stored, collected and disposed of in compliance with Minn. R. CH 7035.

Portable toilets must be positioned so that they are secure and will not be tipped or knocked over. Sanitary waste must be disposed of properly in accordance with Minn. R. CH 7041.

Discharge of spilled or leaked chemicals, including fuel, from any area where chemicals or fuel will be loaded or unloaded shall be prevented using drip pans or absorbents. Supplies shall be available at all times to clean up discharged materials and that an appropriate disposal method must be available for recovered spilled materials.

Exterior vehicle or equipment washing on the project site shall be limited to a defined area of the site. Runoff from the washing area shall be contained in a sediment basin or other similarly effective controls and waste from the washing activity must be properly disposed of. No engine degreasing is allowed on site.

Effective containment for all liquid and solid wastes generated by concrete and other washout operations related to construction activity shall be effectively contained. Liquid and solid washout waste shall not contact the ground, and containment must be designed so that it does not result in runoff from the washout operations or areas. A sign must be installed adjacent to each washout facility that requires site personnel to utilize the proper facilities for disposal of concrete and other washout wastes.

INFESTED WATERS:

MN DNR permits are not valid for work in waters that are designated as infested waters unless accompanied by an Infested Waters Permit or written notification has been obtained from MN DNR stating that such permit is not required. There is no exception for pre-existing permits. If a MN DNR Permit has been issued for the project and the water is later designated as infested, the Contractor shall halt all work covered by the MN DNR Permit until until such time as an Infested Waters Permit is obtained or that written notification is obtained stating that such permit is not required.

INSPECTION & MAINTENANCE:

A trained person shall routinely inspect the entire construction site at least once every 7 days during active construction and within 24-hours after a rainfall event greater than 0.5 inches in 24 hours. Following an inspection that occurs within 24-hours after a rainfall event, the next inspection must be conducted within 7 days.

All inspections and maintenance conducted during construction must be recorded within 24 hours in writing and records must be retained with the SWPPP. Inspection report forms are available in the Project Specifications. Inspection report forms other than those provided shall be approved by the engineer.

Where parts of the project site have permanent cover, but work remains on other parts of the site, inspections may be reduced on these areas to once per month.

Where the site has permanent cover on all exposed areas and no construction activity is occurring anywhere on site, the site must be inspected during non-frozen conditions at least once per month for 12 months. Following the 12th month of permanent cover and no construction activity, inspections shall be terminated until construction activity resumes or notification from MPCA has been issued that erosion has been detected at the site.

During frozen ground conditions, inspections may be suspended and shall resume within 24 hours after runoff occurs or 24 hours prior to resuming construction activity, whichever is first.

Inspection and maintenance shall resume until another Permittee has obtained coverage under this Permit or the project has undergone Final Stabilization, and an NOT has bee submitted.

All erosion prevention and sediment control BMPs shall be inspected to ensure integrity and effectiveness during all routine and post-rainfall inspections. All non-functioning BMPs must be repaired, replaced, or supplemented with functional BMPs by the end of the next business day after discovery, or as soon as field conditions allow access.

All perimeter control devices must be repaired, replaced, or supplemented when they become non-functional or the sediment reaches one-half (1/2) of the height of the device. These repairs must be made by the end of the next business day after discovery, or as soon as field conditions allow.

Temporary and permanent sediment basins must be drained and the sediment removed when the depth of sediment collected in the basin reaches one-half (1/2) the storage volume. Drainage and sediment removal must be completed within 72 hours of discovery, or as soon as field conditions allow.

Surface waters, including drainage ditches and conveyance systems, must be inspected for erosion and sediment deposition during each inspection. All deltas and sediment deposited in drainage ways, catch basins, and other drainage systems shall be removed. The removal and stabilization must take place within seven (7) days of discovery unless precluded by legal, regulatory, or physical access constraints. The Permittee is responsible for obtaining all applicable permits prior to conducting any work in surface waters.

Construction site vehicle exit locations must be inspected for evidence of off-site sediment tracking onto paved surfaces. Tracked sediment must be removed from all paved surfaces both on and off site within 24-hours of discovery, or if applicable, within a shorter time to comply with the permit.

Streets and other areas adjacent to the project must be inspected for evidence of off-site accumulations of sediment. If sediment is present, it must be removed in a manner and at a sufficient frequency to minimize off-site impacts.

All infiltration areas must be inspected to ensure that no sediment from ongoing construction activity is reaching the infiltration area and that equipment is not being driven across the infiltration area.

FINAL STABILIZATION:

Final Stabilization is not complete until all of the following requirements have been met:

1. All soil disturbing activities at the site have been completed and all soils are stabilized by a uniform perennial vegetative cover with a density of 70% of its expected final growth density over the entire pervious surface area, or other equivalent means necessary to prevent soil failure under erosive conditions.
2. Permanent stormwater management system is constructed, meets all requirements of the Permit, and is operating as designed. Temporary or permanent sedimentation basins that are to be used as permanent water quality management basins have been cleaned of any accumulated sediment. All sediment has been removed from conveyance systems, and ditches are stabilized with permanent cover.
3. All temporary synthetic and structural erosion prevention and sediment control BMPs have been removed. BMPs designed to decompose on site may be left in place.
4. For residential construction only, individual lots are considered finally stabilized if the structure(s) are finished, temporary erosion protection and down gradient perimeter control has been completed and the residence has been sold to the homeowner. Also, the "Homeowner Fact Sheet" has been provided to the homeowner.

SCALES SHOWN ON DRAWINGS ARE FOR 24"x36" SIZE SHEETS ONLY. DRAWINGS PLOTTED ON ANY OTHER SIZE SHEETS NEED TO HAVE SCALES ADJUSTED ACCORDINGLY

© Bolton & Menk, Inc. 2017, All Rights Reserved

H:\WIND\T22113672\CAD\ENV\113672_D_BASE_SWPPP-NARR.dwg 12/11/2017 2:58 PM

I HEREBY CERTIFY THAT THIS PLAN, SPECIFICATION OR REPORT WAS PREPARED BY ME OR UNDER MY DIRECT SUPERVISION, AND THAT I AM A DULY LICENSED PROFESSIONAL ENGINEER UNDER THE LAWS OF THE STATE OF MINNESOTA

SIGNATURE: TYPED OR PRINTED NAME: Joseph D. Pelawa

DATE 12/4/2017 LIC. NO. 42603

BOLTON & MENK

www.bolton-menk.com

REV.	BY	DATE
A	CAL	12/4/2017

CITY OF WINDOM, MINNESOTA

2017 WASTEWATER TREATMENT FACILITY IMPROVEMENTS

STORM WATER POLLUTION PREVENTION PLAN NARRATIVE

SHEET 2.05

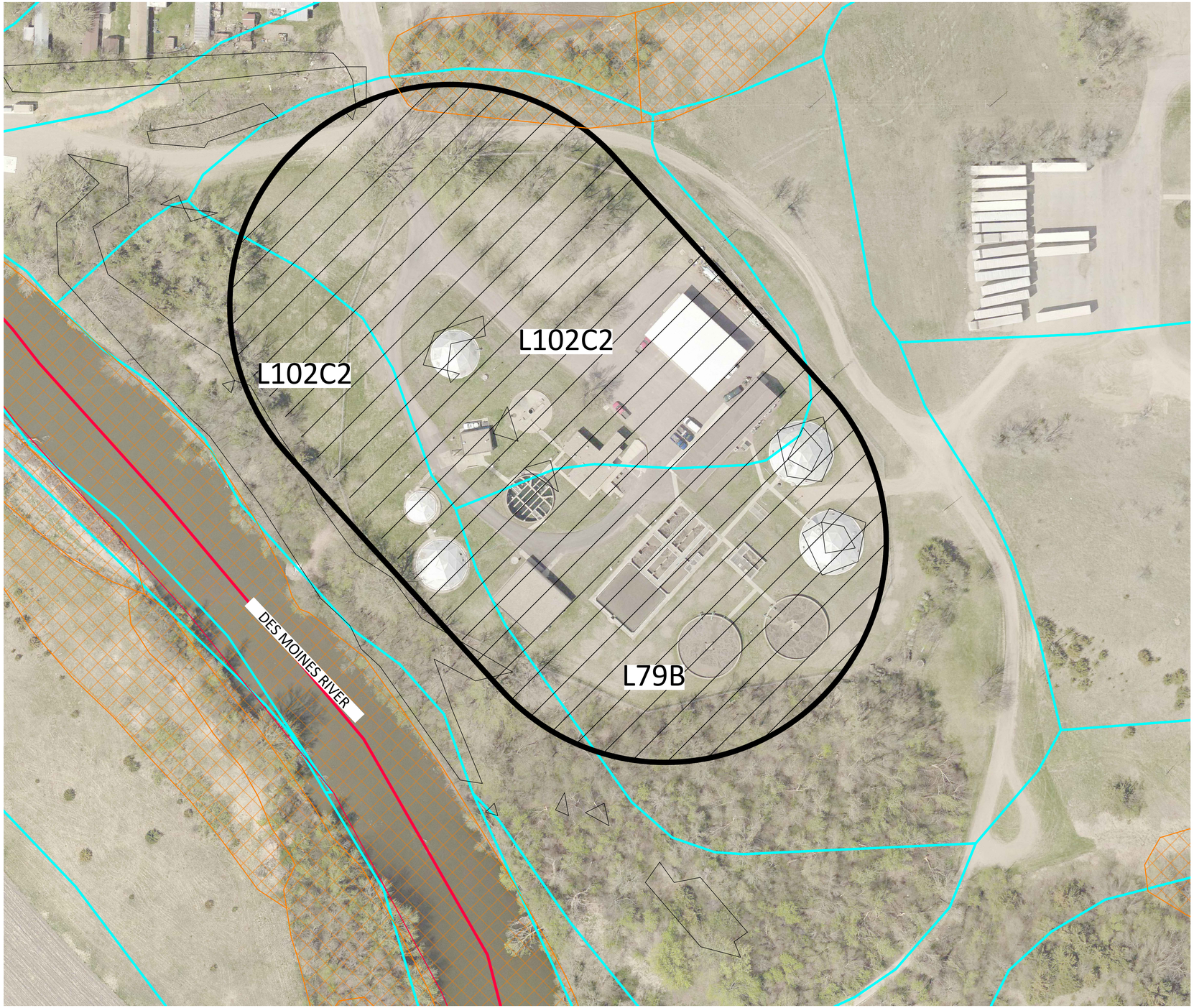

LEGEND

- PROJECT BOUNDARY
- L79B — SOIL TYPE AND BOUNDARY
- NATIONAL WETLANDS INVENTORY
- IMPAIRED WATERS

SOIL TYPE SUMMARY

Map Unit Symbol	Soil Name	Hyd. Soil Group	Erodibility
MUSYM	MUNAME	HYDGRP	MUHELCL
L79B	Clarion Loam, 2 to 6 Percent Slopes	C	NHEL
L102C2	Omsrud-Storden Complex, 6 to 12 Percent Slopes, Moderately Eroded	B	PHEL
L102D2	Omsrud-Storden Complex, 12 to 18 Percent Slopes, Moderately Eroded	B	PHEL

NHEL - Not Highly Erodible Land
PHEL - Potentially Highly Erodible Land
HEL - Highly Erodible Land

LOCATION OF SWPPP REQUIREMENTS IN PROJECT PLAN

DESCRIPTION	SHEET NO.
SITE MAP	C2.01 & C2.07
DIRECTION OF FLOW	C2.0X
FINAL STABILIZATION	C2.08
SOILS	C2.06
DRAINAGE STRUCTURES	NA
DRAINAGE TABULATION	NA
STORM SEWER PLAN/PROFILE SHEETS	NA
EROSION & SEDIMENT CONTROL DETAILS	C1.08
EROSION CONTROL TABULATION	C2.04
TURF ESTABLISHMENT TABULATION	C2.04
NARRATIVE & NOTES	C2.04 & C2.05

SCALES SHOWN ON DRAWINGS ARE FOR 24"x36" SIZE SHEETS ONLY. DRAWINGS PLOTTED ON ANY OTHER SIZE SHEETS NEED TO HAVE SCALES ADJUSTED ACCORDINGLY

© Bolton & Menk, Inc. 2017, All Rights Reserved

H:\WIND\T22113672\CAD\ENV\113672_D_BASE_SWPPP-SOILS.dwg 12/12/2017 9:22 AM

I HEREBY CERTIFY THAT THIS PLAN, SPECIFICATION OR REPORT WAS PREPARED BY ME OR UNDER MY DIRECT SUPERVISION, AND THAT I AM A DULY LICENSED PROFESSIONAL ENGINEER UNDER THE LAWS OF THE STATE OF MINNESOTA

SIGNATURE: TYPED OR PRINTED NAME: Joseph D. Pelawa

DATE 12/4/2017 LIC. NO. 42603

BOLTON & MENK

www.bolton-menk.com

REV.	BY	DATE
A	CAL	12/4/2017

CITY OF WINDOM, MINNESOTA

2017 WASTEWATER TREATMENT FACILITY IMPROVEMENTS

STORM WATER POLLUTION PREVENTION PLAN
SITE & SOILS MAP

SHEET 2.06

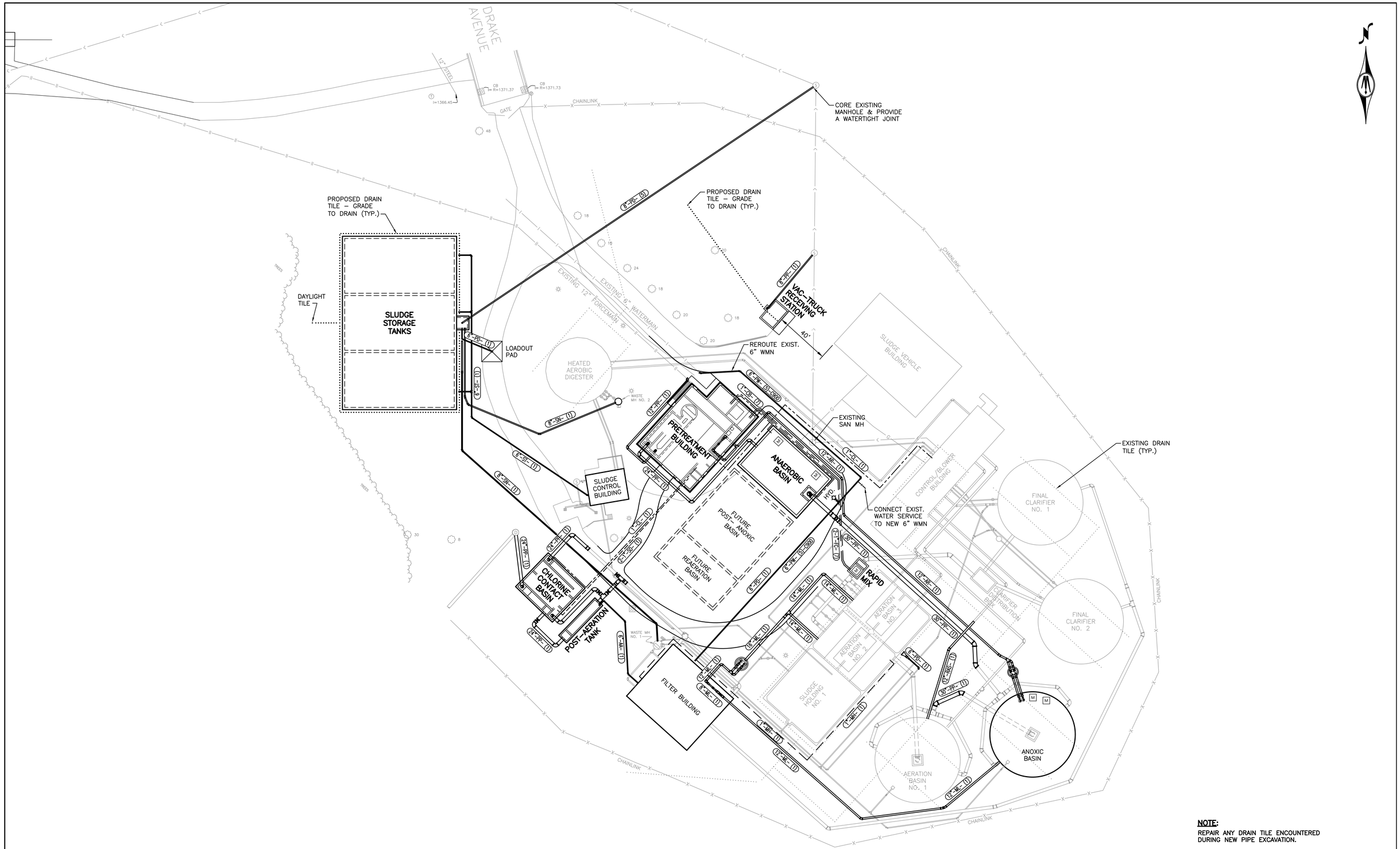

NOTE:
REPAIR ANY DRAIN TILE ENCOUNTERED DURING NEW PIPE EXCAVATION.

SCALES SHOWN ON DRAWINGS ARE FOR 24"x36" SIZE SHEETS ONLY. DRAWINGS PLOTTED ON ANY OTHER SIZE SHEETS NEED TO HAVE SCALES ADJUSTED ACCORDINGLY

© Bolton & Menk, Inc. 2018, All Rights Reserved
H:\WIND\T22113672\CAD\ENV\113672_D_BASE_207-PRO PIPING.DWG 5/10/2018 9:57:57 PM

30 0 30 60
Graphic Scale for 1"=30'

I HEREBY CERTIFY THAT THIS PLAN, SPECIFICATION OR REPORT WAS PREPARED BY ME OR UNDER MY DIRECT SUPERVISION, AND THAT I AM A DULY LICENSED PROFESSIONAL ENGINEER UNDER THE LAWS OF THE STATE OF MINNESOTA

SIGNATURE: _____ TYPED OR PRINTED NAME: Tejpal Singh Bala
DATE 12/4/2017 LIC. NO. 49574

BOLTON & MENK
www.bolton-menk.com

REV.	BY	DATE
A	CAL	12/4/2017

CITY OF WINDOM, MINNESOTA
2017 WASTEWATER TREATMENT FACILITY IMPROVEMENTS
PROPOSED SITE PIPING PLAN

SHEET 2.07

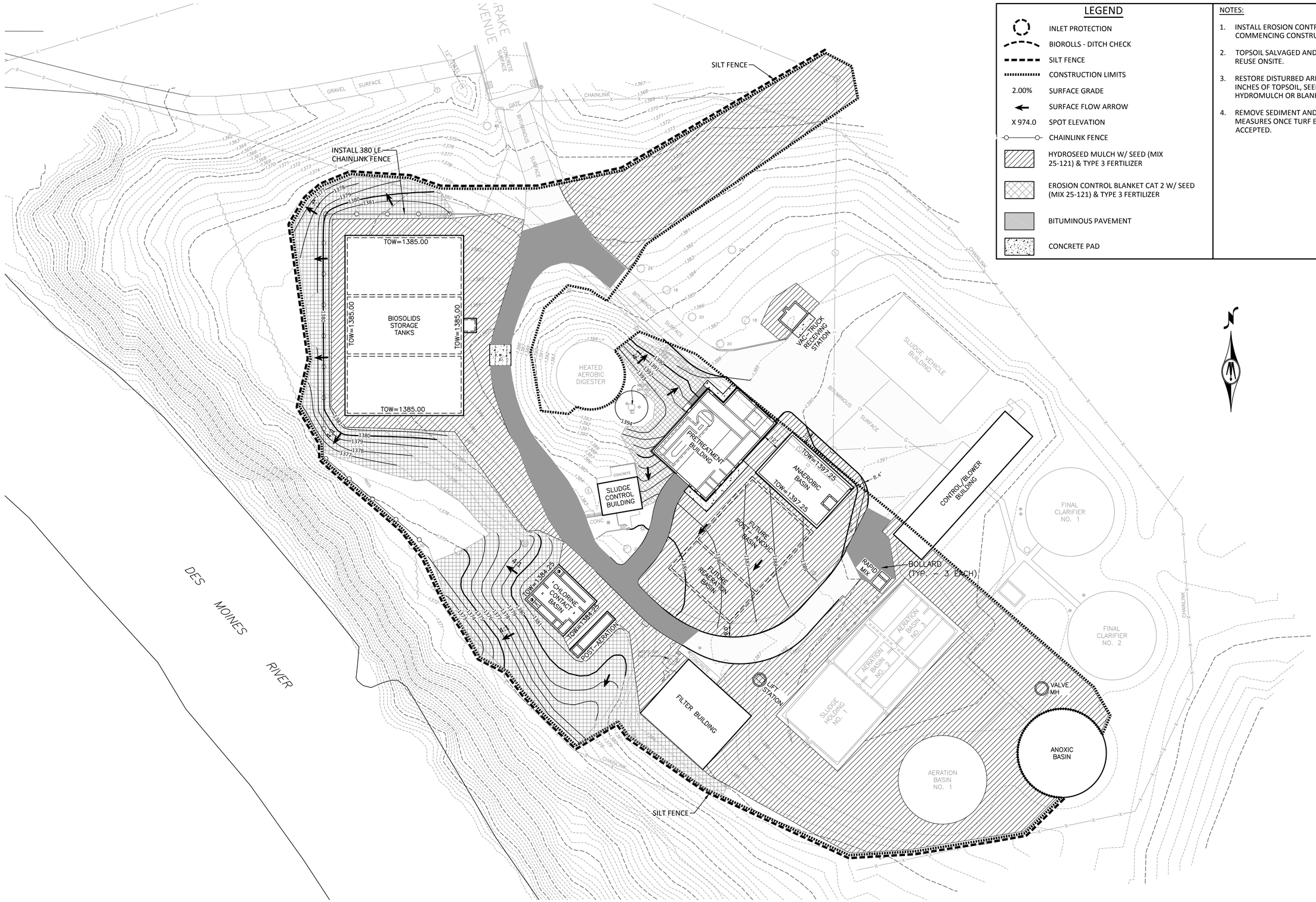

LEGEND

- INLET PROTECTION
- BIOROLLS - DITCH CHECK
- SILT FENCE
- CONSTRUCTION LIMITS
- 2.00% SURFACE GRADE
- SURFACE FLOW ARROW
- X 974.0 SPOT ELEVATION
- CHAINLINK FENCE
- HYDROSEED MULCH W/ SEED (MIX 25-121) & TYPE 3 FERTILIZER
- EROSION CONTROL BLANKET CAT 2 W/ SEED (MIX 25-121) & TYPE 3 FERTILIZER
- BITUMINOUS PAVEMENT
- CONCRETE PAD

NOTES:

1. INSTALL EROSION CONTROL MEASURES PRIOR TO COMMENCING CONSTRUCTION.
2. TOPSOIL SALVAGED AND STOCKPILED ONSITE FOR REUSE ONSITE.
3. RESTORE DISTURBED AREAS WITH MINIMUM OF 4 INCHES OF TOPSOIL, SEED MIX , FERTILIZER AND HYDROMULCH OR BLANKET.
4. REMOVE SEDIMENT AND EROSION CONTROL MEASURES ONCE TURF ESTABLISHMENT IS ACCEPTED.

SCALES SHOWN ON DRAWINGS ARE FOR 24"x36" SIZE SHEETS ONLY. DRAWINGS PLOTTED ON ANY OTHER SIZE SHEETS NEED TO HAVE SCALES ADJUSTED ACCORDINGLY

© Bolton & Menk, Inc. 2018, All Rights Reserved
H:\WIND\T22113672\CAD\ENV\113672_D_BASE_205-PRO-SITE.DWG 5/4/2018 11:52:48 AM

30 0 30 60
Graphic Scale for 1"=30'

I HEREBY CERTIFY THAT THIS PLAN, SPECIFICATION OR REPORT WAS PREPARED BY ME OR UNDER MY DIRECT SUPERVISION, AND THAT I AM A DULY LICENSED PROFESSIONAL ENGINEER UNDER THE LAWS OF THE STATE OF MINNESOTA

SIGNATURE: _____ TYPED OR PRINTED NAME: Tejpal Singh Bala

DATE 12/4/2017 LIC. NO. 49574

BOLTON & MENK

www.bolton-menk.com

REV.	BY	DATE
A	CAL	12/4/2017

CITY OF WINDOM, MINNESOTA

2017 WASTEWATER TREATMENT FACILITY IMPROVEMENTS

PROPOSED SITE PLAN
GRADING, RESTORATION & EROSION CONTROL PLAN

SHEET 2.08

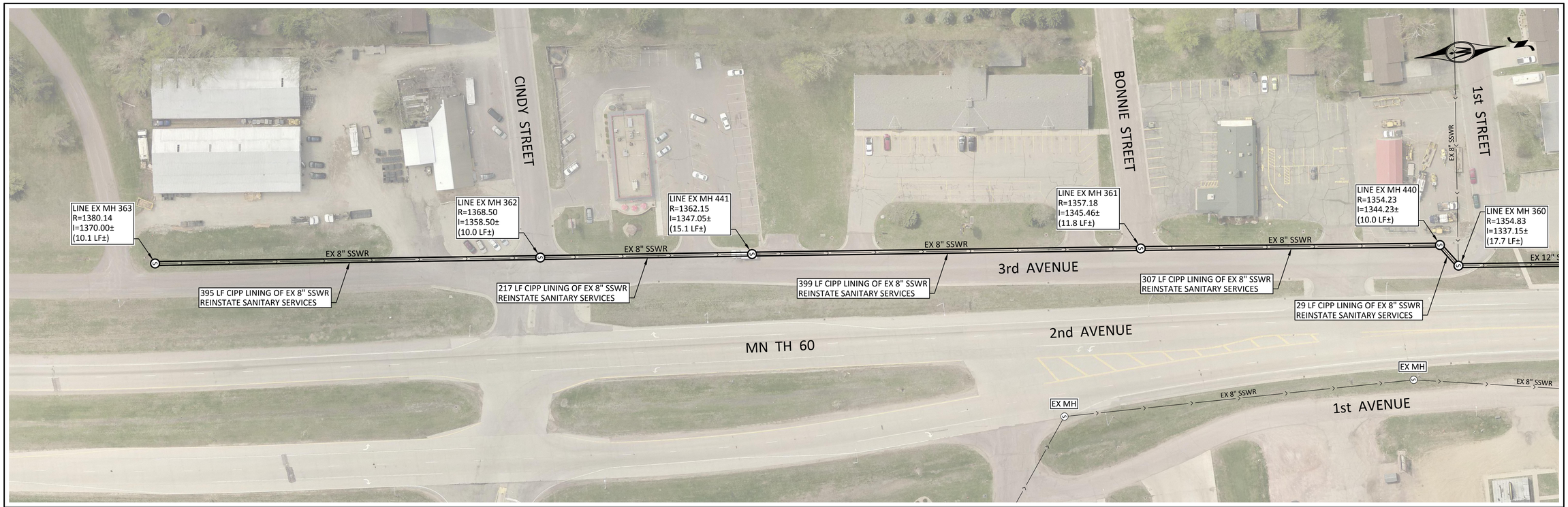

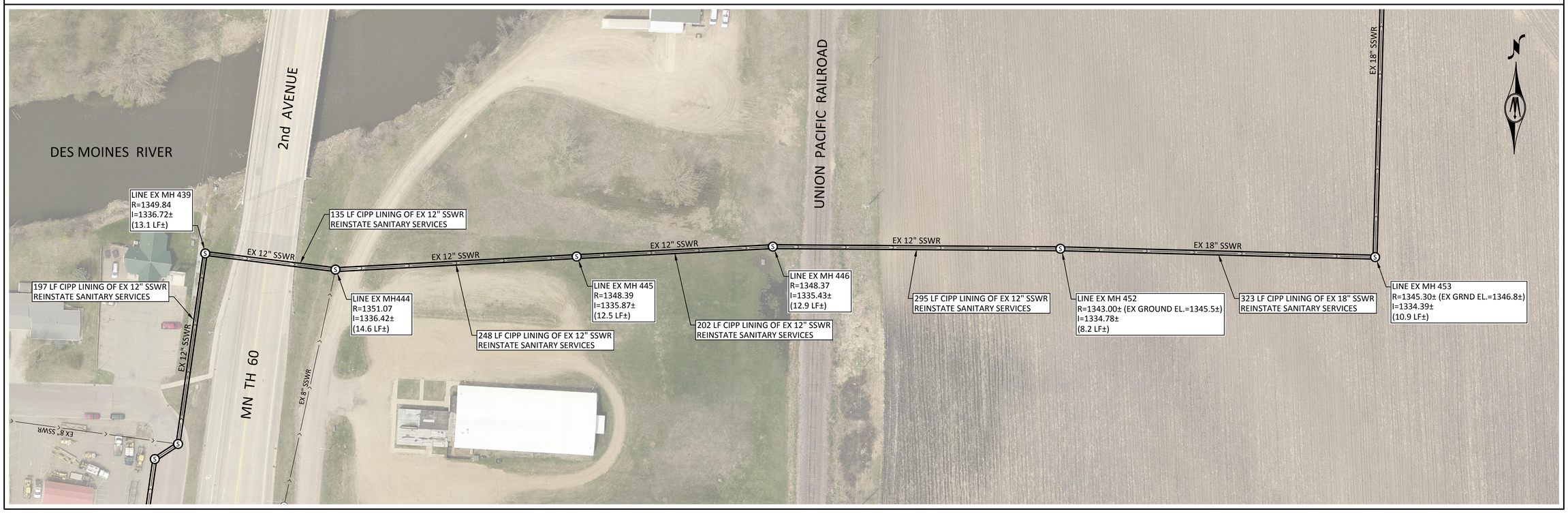

SCALES SHOWN ON DRAWINGS ARE FOR 24"x36" SIZE SHEETS ONLY. DRAWINGS PLOTTED ON ANY OTHER SIZE SHEETS NEED TO HAVE SCALES ADJUSTED ACCORDINGLY

© Bolton & Menk, Inc. 2017, All Rights Reserved
H:\WIND\T22113672\CAD\C3D\113672_C_BASE_N1.DWG 12/15/2017 7:42:02 AM

HORZ. 0 50 100 SCALE FEET

VERT. 0 5 10 SCALE FEET

I HEREBY CERTIFY THAT THIS PLAN, SPECIFICATION OR REPORT WAS PREPARED BY ME OR UNDER MY DIRECT SUPERVISION, AND THAT I AM A DULY LICENSED PROFESSIONAL ENGINEER UNDER THE LAWS OF THE STATE OF MINNESOTA

SIGNATURE: Travis L. Winter TYPED OR PRINTED NAME: Travis L. Winter

DATE 12/4/2017 LIC. NO. 46649

BOLTON & MENK

www.bolton-menk.com

REV.	BY	DATE
A	CAL	12/4/2017

CITY OF WINDOM, MINNESOTA

2017 WASTEWATER TREATMENT FACILITY IMPROVEMENTS

CURED-IN-PLACE PIPE IMPROVEMENT PLAN

SHEET 2.09

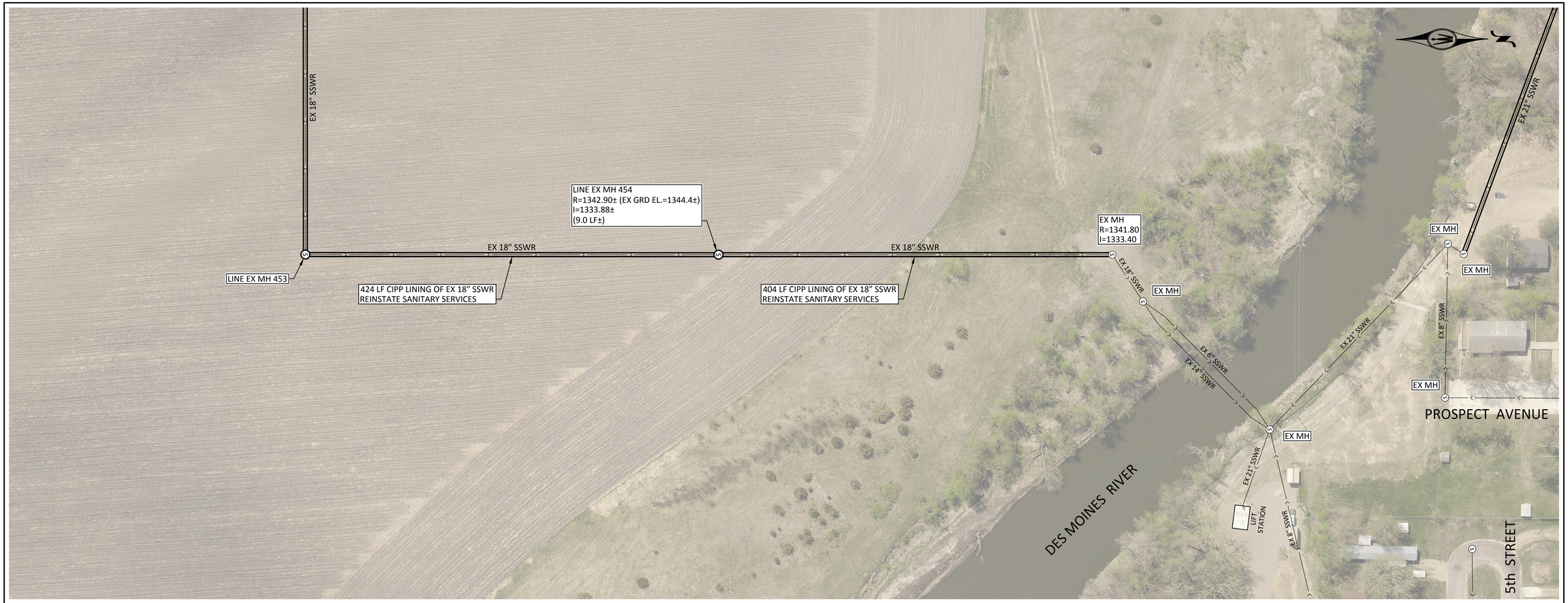

SCALES SHOWN ON DRAWINGS ARE FOR 24"x36" SIZE SHEETS ONLY. DRAWINGS PLOTTED ON ANY OTHER SIZE SHEETS NEED TO HAVE SCALES ADJUSTED ACCORDINGLY

© Bolton & Menk, Inc. 2017, All Rights Reserved
H:\WIND\T22113672\CAD\C3D\113672_C_BASE_N1.DWG 12/15/2017 7:42:02 AM

HORZ. 0 50 100 SCALE FEET

VERT. 0 5 10 SCALE FEET

I HEREBY CERTIFY THAT THIS PLAN, SPECIFICATION OR REPORT WAS PREPARED BY ME OR UNDER MY DIRECT SUPERVISION, AND THAT I AM A DULY LICENSED PROFESSIONAL ENGINEER UNDER THE LAWS OF THE STATE OF MINNESOTA

SIGNATURE: Travis L. Winter TYPED OR PRINTED NAME: Travis L. Winter

DATE 12/4/2017 LIC. NO. 46649

BOLTON & MENK

www.bolton-menk.com

REV.	BY	DATE
A	CAL	12/4/2017

CITY OF WINDOM, MINNESOTA

2017 WASTEWATER TREATMENT FACILITY IMPROVEMENTS

CURED-IN-PLACE PIPE IMPROVEMENT PLAN

SHEET 2.10

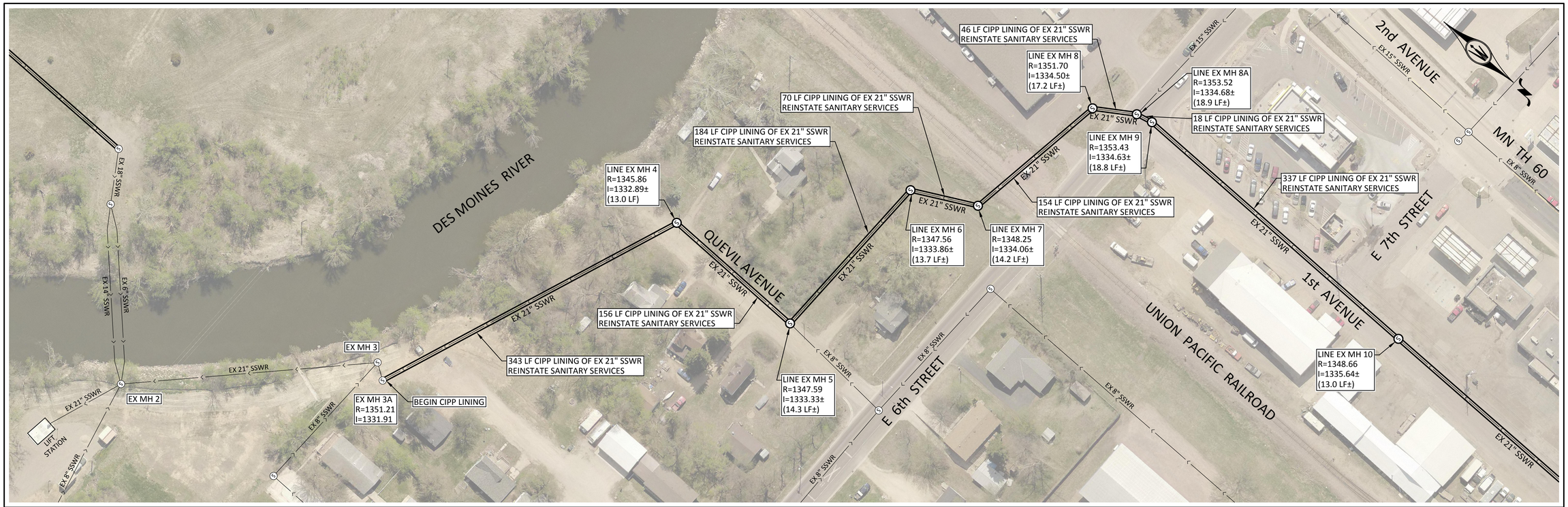

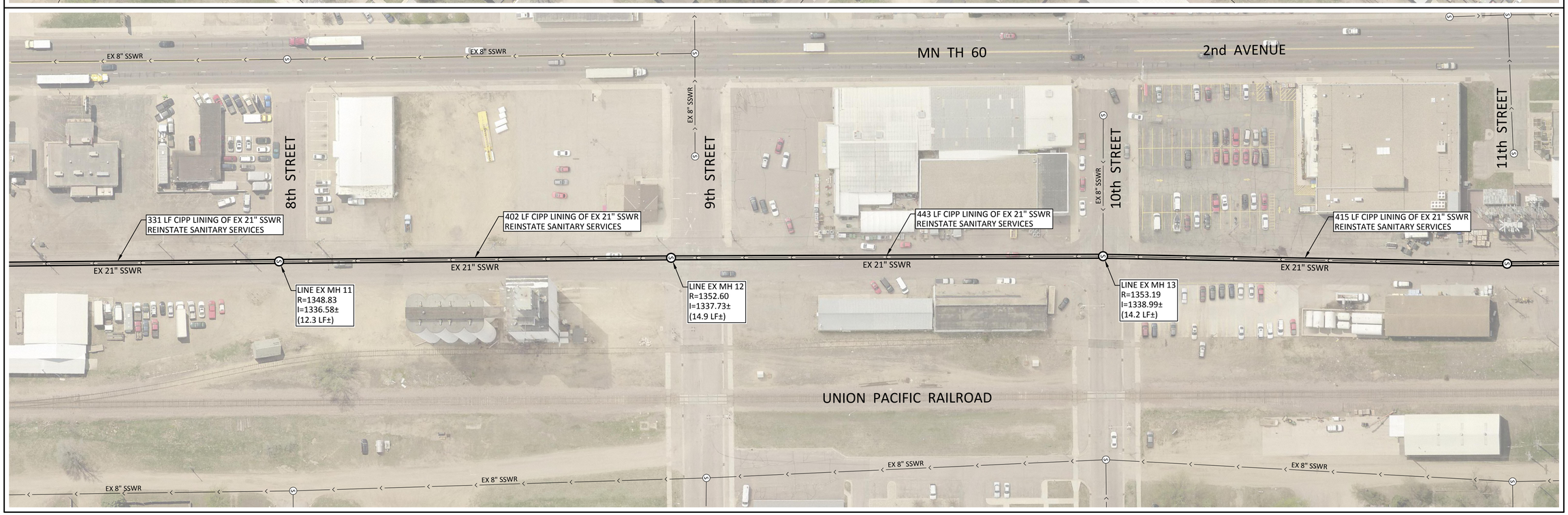

SCALES SHOWN ON DRAWINGS ARE FOR 24"x36" SIZE SHEETS ONLY. DRAWINGS PLOTTED ON ANY OTHER SIZE SHEETS NEED TO HAVE SCALES ADJUSTED ACCORDINGLY

© Bolton & Menk, Inc. 2017, All Rights Reserved
H:\WIND\T22113672\CAD\C3D\113672_C_BASE_N1.DWG 12/15/2017 7:42:02 AM

HORZ. 0 50 100 SCALE FEET

VERT. 0 5 10 SCALE FEET

I HEREBY CERTIFY THAT THIS PLAN, SPECIFICATION OR REPORT WAS PREPARED BY ME OR UNDER MY DIRECT SUPERVISION, AND THAT I AM A DULY LICENSED PROFESSIONAL ENGINEER UNDER THE LAWS OF THE STATE OF MINNESOTA

SIGNATURE: Travis L. Winter TYPED OR PRINTED NAME: Travis L. Winter

DATE 12/4/2017 LIC. NO. 46649

BOLTON & MENK

www.bolton-menk.com

REV.	BY	DATE
A	CAL	12/4/2017

CITY OF WINDOM, MINNESOTA

2017 WASTEWATER TREATMENT FACILITY IMPROVEMENTS

CURED-IN-PLACE PIPE IMPROVEMENT PLAN

SHEET 2.11

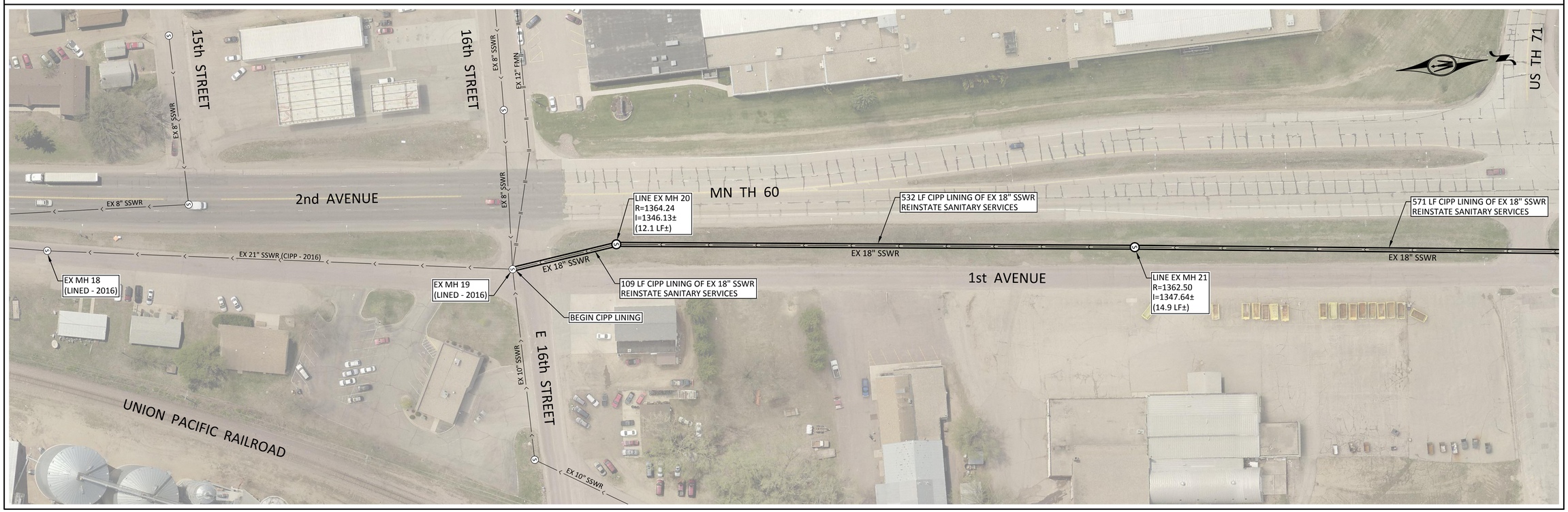

SCALES SHOWN ON DRAWINGS ARE FOR 24"x36" SIZE SHEETS ONLY. DRAWINGS PLOTTED ON ANY OTHER SIZE SHEETS NEED TO HAVE SCALES ADJUSTED ACCORDINGLY

© Bolton & Menk, Inc. 2017, All Rights Reserved
H:\WIND\T22113672\CAD\C3D\113672_C_BASE_N1.DWG 12/15/2017 7:42:02 AM

HORZ. 0 50 100 SCALE FEET

VERT. 0 5 10 SCALE FEET

I HEREBY CERTIFY THAT THIS PLAN, SPECIFICATION OR REPORT WAS PREPARED BY ME OR UNDER MY DIRECT SUPERVISION, AND THAT I AM A DULY LICENSED PROFESSIONAL ENGINEER UNDER THE LAWS OF THE STATE OF MINNESOTA

SIGNATURE: Travis L. Winter TYPED OR PRINTED NAME: Travis L. Winter

DATE 12/4/2017 LIC. NO. 46649

BOLTON & MENK

www.bolton-menk.com

REV.	BY	DATE
A	CAL	12/4/2017

CITY OF WINDOM, MINNESOTA

2017 WASTEWATER TREATMENT FACILITY IMPROVEMENTS

CURED-IN-PLACE PIPE IMPROVEMENT PLAN

SHEET 2.12

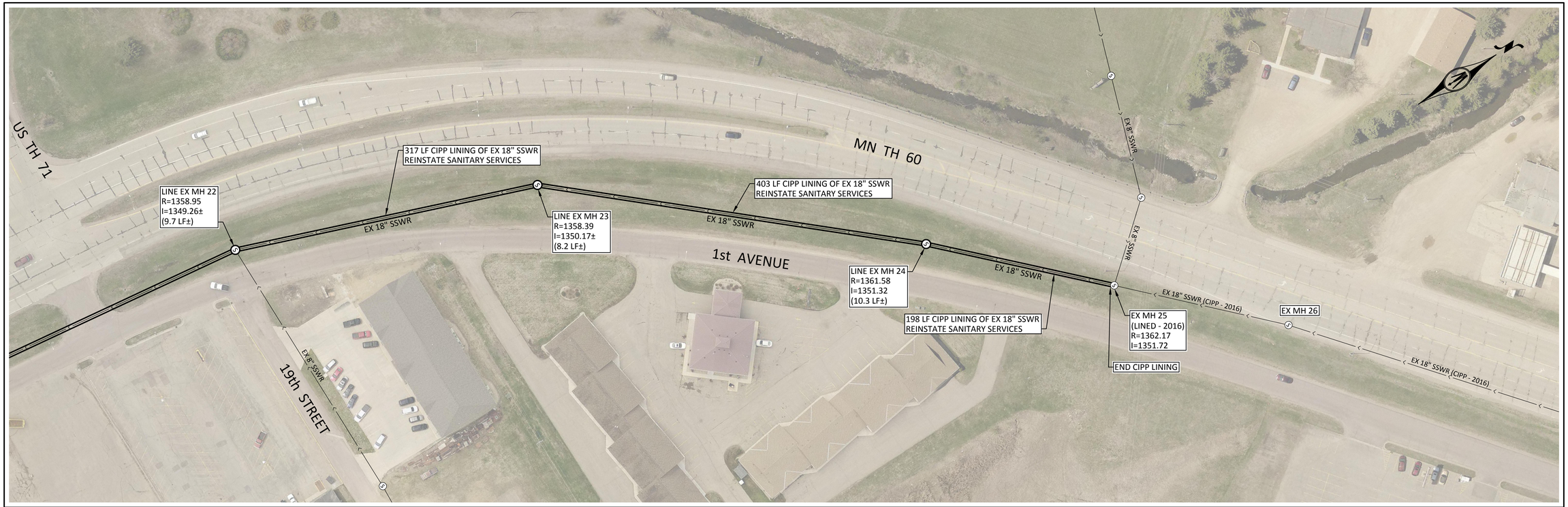

SCALES SHOWN ON DRAWINGS ARE FOR 24"x36" SIZE SHEETS ONLY. DRAWINGS PLOTTED ON ANY OTHER SIZE SHEETS NEED TO HAVE SCALES ADJUSTED ACCORDINGLY

© Bolton & Menk, Inc. 2017, All Rights Reserved
H:\WIND\T22113672\CAD\C3D\113672_C_BASE_N1.DWG 12/15/2017 7:42:02 AM

HORZ. 0 50 100 SCALE FEET

VERT. 0 5 10 SCALE FEET

I HEREBY CERTIFY THAT THIS PLAN, SPECIFICATION OR REPORT WAS PREPARED BY ME OR UNDER MY DIRECT SUPERVISION, AND THAT I AM A DULY LICENSED PROFESSIONAL ENGINEER UNDER THE LAWS OF THE STATE OF MINNESOTA

SIGNATURE: Travis L. Winter TYPED OR PRINTED NAME: Travis L. Winter

DATE 12/4/2017 LIC. NO. 46649

BOLTON & MENK

www.bolton-menk.com

REV.	BY	DATE
A	CAL	12/4/2017

CITY OF WINDOM, MINNESOTA

2017 WASTEWATER TREATMENT FACILITY IMPROVEMENTS

CURED-IN-PLACE PIPE IMPROVEMENT PLAN

SHEET 2.13

STRUCTURAL NOTES

GENERAL

1. NOTES AND DETAILS ON THE STRUCTURAL DRAWINGS TAKE PRECEDENCE OVER THESE STANDARD STRUCTURAL NOTES.

2. ALL MATERIAL AND WORKMANSHIP SHALL CONFORM TO THE REQUIREMENTS OF THE FOLLOWING CODES, SPECIFICATIONS, AND DESIGN MANUAL (LATEST EDITION UNLESS NOTED):
   a. 2015 MINNESOTA BUILDING CODE
   b. AMERICAN CONCRETE INSTITUTE (ACI)
   c. PRESTRESSED CONCRETE INSTITUTE (PCI)
   d. CONCRETE REINFORCING STEEL INSTITUTE (CRSI) MANUAL OF STANDARD PRACTICE (FOR PLACING & DETAILING OF ALL REINFORCING)
   e. AMERICAN INSTITUTE OF STEEL CONSTRUCTION (AISC)
   f. AMERICAN WELDING SOCIETY (AWS) STANDARDS FOR WELDING AS MODIFIED BY A.I.S.C. SPEC.
   g. STATE AND FEDERAL OCCUPATIONAL SAFETY AND HEALTH ADMINISTRATION (OSHA) REQUIREMENTS

3. REFER TO SPECIFICATIONS FOR INFORMATION NOT COVERED BY THESE NOTES OR DRAWINGS.

4. THE CONTRACTOR SHALL VERIFY ALL DIMENSIONS, ELEVATIONS, AND SITE CONDITIONS BEFORE STARTING WORK; AND THE ENGINEER SHALL BE IMMEDIATELY NOTIFIED, IN WRITING, OF ANY DISCREPANCIES.

5. IN NO CASE SHALL DIMENSIONS BE SCALED FROM PLANS, SECTIONS, OR DETAILS ON THE STRUCTURAL DRAWINGS.

6. TYPICAL DETAILS SHALL BE USED WHENEVER APPLICABLE.

7. ALL OMISSIONS AND CONFLICTS BETWEEN THE VARIOUS ELEMENTS OF THE DRAWINGS AND/OR SPECIFICATIONS SHALL BE BROUGHT TO THE ATTENTION OF, AND RESOLVED WITH THE ENGINEER BEFORE PROCEEDING WITH ANY WORK SO INVOLVED.

8. THE CONTRACTOR SHALL DETERMINE THE LOCATION OF UTILITY SERVICES IN THE AREA TO BE EXCAVATED BEFORE BEGINNING EXCAVATION.

9. NO PIPES, DUCTS, SLEEVES, CHASES, ETC., SHALL BE PLACED IN SLABS OR WALLS, NOR SHALL ANY STRUCTURAL MEMBER BE CUT FOR PIPES, DUCTS, ETC.

10. RECESSES, DEPRESSIONS, DIMENSIONS, ELEVATIONS, OPENINGS, EQUIPMENT SUPPORTS, AND DETAILS SHALL BE VERIFIED BY REFERENCE TO ARCHITECTURAL, MECHANICAL, AND ELECTRICAL DRAWINGS. OPENINGS, REQUIRED BUT NOT SHOWN, MUST BE PLACED BETWEEN STRUCTURAL MEMBERS.

11. TEMPORARY BRACING:
    a. PROVIDE TEMPORARY LATERAL SUPPORT FOR ALL WALLS WHERE GRADE VARIES ON THE TWO SIDES UNTIL PERMANENT STRUCTURAL SUPPORT SYSTEM IS IN PLACE.
    b. PROVIDE TEMPORARY BRACING FOR ALL BUILDING ELEMENTS AND COMPONENTS UNTIL THE STRUCTURE IS SUFFICIENTLY COMPLETE TO PROVIDE PERMANENT BRACING.

DESIGN DATA

1. WIND LOAD ..... 3 SECONDS GUSTS ..... V_{ULT} = 120 MPH
   V_{ASD} = 93 MPH
   RISK CATAGORY III
   WIND EXPOSURE C
   INTERNAL PRESSURE COEFFICIENT ..... GC_{pi} = ±0.18

2. ROOF LOADS ..... GROUND SNOW ..... Pg = 50 PSF
   FLAT ROOF SNOW ..... Pf = 38.5 PSF
   IMPORTANCE FACTOR ..... I = 1.1
   EXPOSURE FACTOR ..... Ce = 1.0
   THERMAL FACTOR ..... Ct = 1.0

FOOTINGS AND FOUNDATIONS

1. NET ALLOWABLE SOIL BEARING PRESSURE:
   a. Fp = 4000 psf (BIOSOLIDS STORAGE & ANAEROBIC BASIN)
   b. Fp = 2000 psf (OTHER STRUCTURES)

2. FOOTINGS, FOUNDATIONS AND OTHER ITEMS RELATED TO THE SOILS SHALL BE CONSTRUCTED IN ACCORDANCE WITH THE RECOMMENDATIONS IN THE SOILS REPORT.

3. THE NET ALLOWABLE SOIL BEARING PRESSURE SHALL BE FIELD VERIFIED BY SOILS ENGINEER PRIOR TO PLACING FOOTINGS.

4. ALL SITE SOIL WORK SHALL BE DONE UNDER THE DIRECT OBSERVATION OF A SOILS ENGINEER.

5. PROTECT FOUNDATION EXCAVATIONS FROM FROST; DO NOT PLACE CONCRETE ON FROZEN GROUND.

6. FOUNDATION EXCAVATIONS SHALL BE KEPT FREE OF LOOSE MATERIAL AND STANDING WATER AND SHALL BE CHECKED AND APPROVED BY THE SOILS ENGINEER BEFORE THE PLACEMENT OF ANY CONCRETE.

7. WALL FOOTINGS ARE CONTINUOUS POURED CONCRETE WITH CONTINUOUS REINFORCING PLACED 3" CLEAR OF BOTTOM AND SIDES.

8. PROVIDE 24 DIA. LAP AT SPLICES AND FULL CROSSING LAP AT CORNERS AND INTERSECTIONS OF STRIP FOOTINGS.

9. UNLESS OTHERWISE NOTED, WALL FOOTINGS ARE CENTERED UNDER WALLS AND COLUMN FOOTINGS UNDER COLUMNS.

10. FOOTINGS FOR WALLS NOT NOTED SHALL BE 14" THICK WITH A MINIMUM PROJECTION OF 4" EACH SIDE WITH 2-#5 CONTINUOUS.

11. BOTH SIDES OF FOUNDATION WALLS SHALL BE BACKFILLED SIMULTANEOUSLY SO AS TO PREVENT OVERTURNING OR LATERAL MOVEMENT OF WALLS.

REINFORCING STEEL

1. CONCRETE WORK SHALL CONFORM TO ALL REQUIREMENTS OF ACI 301 (LATEST EDITION) "SPECIFICATIONS FOR STRUCTURAL CONCRETE FOR BUILDINGS", EXCEPT AS MODIFIED BY THESE NOTES.

2. BAR REINFORCEMENT SHALL BE: ASTM A615, GRADE 60.

3. WELDED WIRE FABRIC SHALL MEET ASTM A1064.

4. CONTRACTOR SHALL SUBMIT REINFORCING STEEL SHOP DRAWINGS FOR APPROVAL BEFORE FABRICATION AND INSTALLATION.

5. ALL REINFORCING STEEL, ANCHOR BOLTS, DOWELS, AND INSERTS SHALL BE SECURED IN POSITION WITH WIRE POSITIONERS BEFORE PLACING CONCRETE OR GROUT.

6. DOWELS BETWEEN FOOTINGS AND WALLS SHALL BE THE SAME GRADE, SIZE, AND SPACING AS VERTICAL WALL REINFORCING.

7. MINIMUM LAP SPLICES OF REINFORCING BARS SHALL BE AS FOLLOWS UNLESS NOTED OTHERWISE:
   a. CONCRETE: CLASS B AS DEFINED IN ACI 318-11 OR CHART BELOW.

CONCRETE REINFORCING LAP SPLICE LENGTHS (2" CLR)	
BAR SIZE	LAP LENGTH (INCHES)
#3	17
#4	23
#5	28
#6	34
#7	49
#8	56
#9	69
#10	85
#11	102

8. REINFORCING STEEL SHALL BE PROVIDED WITH THE FOLLOWING AMOUNTS OF COVER FOR CAST-IN-PLACE CONCRETE:
   a. CONCRETE PLACED AGAINST EARTH ..... 3"
   b. CONCRETE SURFACE (FORMED) EXPOSED TO EARTH OR WEATHER:
      - #6 THROUGH #18 BARS ..... 2"
      - #5 BAR AND SMALLER ..... 2"
      - STIRRUPS & TIEs ..... 2"

9. FIRST BAR SPACING IN SLABS, WALLS, MATS & FOOTINGS TO BE 3" CLR. FROM EDGE. CRSI APPENDIX C DOES NOT APPLY.

REINFORCED CONCRETE

1. CONCRETE WORK SHALL CONFORM TO ALL REQUIREMENTS OF ACI 301 (LATEST EDITION) "SPECIFICATIONS FOR STRUCTURAL CONCRETE FOR BUILDINGS", EXCEPT AS MODIFIED BY THESE NOTES.

2. CONCRETE SHALL HAVE A MINIMUM 28 DAY COMPRESSIVE STRENGTH (f'c)AS FOLLOWS:

	F'c (P.S.I.) 28 DAYS
FOOTINGS	3,000
INTERIOR SLABS ON GRADE	4,000
TREATMENT STRUCTURES, CONCRETE TOP SLABS, BASE SLABS & WALLS	4,000 (AIR ENTRAINED)
EXTERIOR WALLS & SITEWORK	4,000 (AIR ENTRAINED)
TOPPING SLABS	3,000
MASONRY COREFILLING	3,000

3. CONTRACTOR SHALL SUBMIT MIX DESIGNS FOR APPROVAL 14 DAYS PRIOR TO FABRICATION AND INSTALLATION. ALL CONCRETE MIXES SHALL BE DESIGNED AND CERTIFIED BY A MATERIALS TESTING LABORATORY.

5. REFER TO DRAWINGS OF OTHER DISCIPLINES FOR MOLDS, GROOVES, CLIPS, ORNAMENTS, GROUNDS, ETC. REQUIRED TO BE CAST INTO CONCRETE.

6. PROJECTING CORNERS OF SLABS, BEAMS, WALLS, COLUMNS, ETC. SHALL BE FORMED WITH A 3/4" CHAMFER.

7. NO CONDUIT PLACED IN A CONCRETE SLAB SHALL HAVE AN OUTSIDE DIAMETER GREATER THAN 1/3 THE THICKNESS OF THE SLAB. NO CONDUIT SHALL BE EMBEDDED IN A SLAB THAT IS LESS THAN 3-1/2" THICK. EXCEPT FOR LOCAL OFFSETS, MINIMUM CLEAR DISTANCE BETWEEN CONDUITS SHALL BE 6".

8. UNLESS OTHERWISE NOTED, REINFORCE ALL CONCRETE TOPPING SLABS W/ #4 @ 16" O.C. EA. WAY CENTERED

9. UNLESS OTHERWISE NOTED, USE 6" CONCRETE SLABS ON GRADE REINFORCED W/ #4 @ 12"O .C. EA. WAY CENTERED

CAST-IN-PLACE CONCRETE WALLS

1. UNLESS OTHERWISE NOTED ON PLANS OR SECTIONS, REINFORCE CAST-IN-PLACE CONCRETE WALLS WITH #5 @ 12" O.C. HORIZONTALLY, AND #5 @ 12" O.C. VERTICALLY EACH FACE.

2. PROVIDE #5x4'-0" (2'-0" EACH LEG) CORNER BARS AT 12" O.C. HORIZONTAL REINFORCING AT OUTSIDE CORNER OF WALL AND EACH FACE AT INTERSECTIONS WITH (3) #5 VERTICAL SUPPORT BARS.

3. ALL OPENINGS IN WALLS AND SLABS HAVE ADDED REINFORCING AS PER DETAIL BELOW:

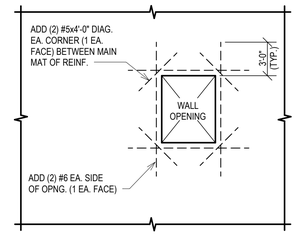

4. WALL REINFORCING IS CONTINUOUS THROUGH COLUMNS AND PIERS.

PRECAST AND PRESTRESSED CONCRETE UNITS

1. THE DESIGN OF ALL PRECAST AND PRESTRESSED CONCRETE UNITS SHALL CONFORM TO A.C.I. 318.

2. SUBMIT COMPLETE SHOP DRAWINGS FOR APPROVAL, SHOWING THE ERECTION PLAN, ALL BEARING CONDITIONS, AND ANCHORAGE DETAILS.

3. SUBMIT CALCULATIONS AND DRAWINGS CERTIFIED BY A PROFESSIONAL ENGINEER FOR PRECAST AND PRESTRESSED UNITS AND ANCHORAGES.

4. UPON INSTALLATION, PRECAST AND PRESTRESSED ROOF AND FLOOR UNITS SHALL BE ESSENTIALLY PAST THE EFFECTS OF DEFORMATION DUE TO CREEP, AND SHALL HAVE CAMBER NOT OVER 1/360 OF THE SPAN. SUCH CAMBER SHALL BE UNIFORM FROM UNIT TO UNIT.

5. ALL HEADERS AT OPENINGS IN PRECAST AND PRESTRESSED CONCRETE SHALL BE FURNISHED BY SUPPLIER.

6. PLACE MECHANICAL OPENINGS NOT SHOWN ON PLANS BETWEEN WEBS IN PRECAST UNITS. VERIFY SIZE AND LOCATION WITH PRECAST SUPPLIER.

CONCRETE MASONRY

1. CONCRETE MASONRY WALLS SHALL HAVE A MINIMUM 28 DAY COMPRESSIVE STRENGTH OF f'm = 1500 P.S.I.

2. MORTAR SHALL BE TYPE "M" BELOW GRADE, TYPE "S" ABOVE GRADE CONFORMING TO ASTM C270.

3. WHERE NO FOOTING OR FOUNDATION WALL IS SHOWN UNDER A MASONRY WALL, FLOORS UNDER SUCH WALL SHALL INCLUDE A THICKENED SLAB.

4. REINFORCED CONCRETE BLOCK WALLS:
   a. SEE PLANS FOR LOCATION OF REINFORCED WALLS.
   b. PROVIDE DOWELS BETWEEN FOUNDATIONS & WALLS EQUAL TO THE SIZE AND SPACING OF THE VERTICAL REINFORCING U.N.O.
   c. VERTICAL STEEL SHALL BE CONTINUOUS WITH 2'-6" LAP AT SPLICES UNLESS NOTED.
   d. WHEN ONE BAR IN A SINGLE CORE, PLACE IN CENTER UNLESS NOTED OTHERWISE.
   e. WHEN TWO BARS IN A SINGLE CORE, PLACE ONE NEAR EACH FACE.
   f. RUN BOND BEAM REINFORCEMENT CONTINUOUS THROUGH CONTROL JOINTS
   g. DISCONTINUE JOINT REINFORCING AT CONTROL JOINTS U.N.O.
   h. FILL BLOCK CORE AT VERTICAL STEEL WITH 3000 P.S.I. GROUT, RODDED OR VIBRATED IN PLACE.
   i. WALL CONSTRUCTION SHALL NOT EXCEED HEIGHTS OF 4'-0" BEFORE PLACEMENT OF CORE GROUT UNLESS CLEANOUT HOLES ARE PROVIDED AT THE BOTTOM OF EACH GROUT LIFT, THEN A MAXIMUM HEIGHT OF 8'-0" BEFORE PLACEMENT OF CORE GROUT.
5. UNLESS NOTED OTHERWISE ALL MASONRY WALL LINTELS SHOULD BEAR ON SOLID MASONRY 8" EACH END AND FILL (3) COURSES BELOW LINTEL BRG. SOLID WITH CONCRETE

6. UNLESS NOTED OTHERWISE ALL STEEL BEAMS SHALL BEAR 8" INTO MASONRY WALL AND FILL (3) COURSES BELOW BEAM BEARING SOLID WITH CONCRETE

7. CONCRETE BLOCK WALL LINTELS:
   a. ALL OPENINGS IN CONCRETE BLOCK WALL NOT SPECIFICALLY INDICATED TO HAVE OTHER TYPES OF LINTELS SHALL HAVE REINFORCED BLOCK LINTELS AS FOLLOWS:
      - SPANS UP TO 6'-0" HAVE 8" DEEP LINTEL BLOCKS.
      - SPANS 6'-1" TO 10'-0" TO HAVE 16" DEEP LINTEL BLOCKS.
      - 4 & 6" WIDE UNITS TO HAVE 1-#5 BTM.
      - 8, 10, & 12" WIDE UNITS TO HAVE 2-#5 BTM.
   b. WHERE LINTEL IS CONTINUOUS OVER TWO OPENINGS WITH INTERMEDIATE SUPPORT, USE 1-#5 TOP AND 1-#5 BOTTOM.
   c. ALL BLOCK LINTELS TO BE FILLED WITH 3,000 P.S.I. CONCRETE.
   d. EXTEND ALL LINTELS A MINIMUM OF 8" BEYOND EACH EDGE OF OPENING. WHERE LINTEL BEARS ON CONCRETE BLOCK, FILL THREE COURSES OF BLOCK MINIMUM WITH CONCRETE.
   e. IF OPENING OCCURS NEXT TO CONCRETE WALL OR COLUMN, BOLT ANGLE TO COLUMN AND REST LINTEL ON ANGLE. OBTAIN ANGLE SIZE AND BOLT REQUIREMENTS FROM ENGINEER.
   f. IF OPENING OCCURS NEXT TO STEEL COLUMN, WELD ANGLE TO COLUMN AND REST LINTEL ON ANGLE. OBTAIN ANGLE SIZE AND WELD REQUIREMENTS FROM ENGINEER.

8. MASONRY VENEER-FACED LINTELS WITH CONCRETE BLOCK BACK-UP:
   a. ALL VENEER OPENINGS IN MASONRY VENEER-FACED BLOCK WALLS NOT SPECIFICALLY INDICATED TO HAVE OTHER LINTELS SHALL HAVE STEEL ANGLE OR BENT PLATE LINTELS AS FOLLOWS:
      - SPANS TO 4'-0" SHALL HAVE 4" VERTICAL LEG MINIMUM.
      - SPANS 4'-1" TO 8'-0" SHALL HAVE 6" VERTICAL LEG MINIMUM.
      - HORIZONTAL LEG OF ANGLE OR BENT PLATE SHALL EXTEND TO BETWEEN 1/2" AND 1" CLEAR OF OUTSIDE FACE OF VENEER.
      - ANGLE OR BENT PLATE THICKNESS SHALL BE 3/8".
      - BEAR ANGLES 6" EA. END.
      - BOLT VERTICAL LEG TO REINFORCED BLOCK WITH 1/2"x5" HILTI KWIK BOLTS AT 2'-8" O.C. MAX. AND EACH. END. LOCATE BOLTS 1 1/2" DOWN FROM TOP OF ANGLE.

STRUCTURAL STEEL

1. STEEL PROPERTIES:

	Fy (psi)	ASTM
STRUCTURAL WIDE FLANGE SHAPES	50,000	A992
OTHER STRUCTURAL SHAPES & PLATES, ETC.	36,000	A36
HIGH STRENGTH BOLTS, U.N.O.	92,000	A325
ANCHOR RODS (TENSILE STRENGTH)	36,000	F1554
WELDING ELECTRODES	E70XX	A233
STRUCTURAL PIPES	35,000 GRADE B	A53 TYPE E
STRUCTURAL TUBES	46,000	A500 GRADE B
STAINLESS STEEL	30,000	TYPE 304 OR TYPE 316

   EXPANSION BOLTS SHALL BE STAINLESS STEEL HILTI KWIK BOLT 3 OR PREAPPROVED EQUAL.

2. STRUCTURAL STEEL SUPPLIER SHALL SUBMIT SHOP DRAWINGS FOR APPROVAL PRIOR TO FABRICATION.

3. STRUCTURAL STEEL DESIGN AND CONSTRUCTION SHALL CONFORM TO AISC "SPECIFICATION FOR STRUCTURAL STEEL BUILDINGS" AND AISC "CODE OF STANDARD PRACTICE FOR STEEL BUILDINGS AND BRIDGES" LATEST EDITIONS.

4. PAINT ALL STEEL PER SSPC STANDARDS - LATEST EDITION.

5. HOT DIP GALVANIZE ALL EXTERIOR STEEL AND AS NOTED ON PLAN FOR ASTM A123 AND ASTM A153.

6. ALL BEAMS SHALL BE MARKED AND ERECTED WITH NATURAL CAMBER UPWARD.

7. THE STEEL ERECTOR SHALL PROVIDE TEMPORARY SUPPORTS UNTIL FINAL STABILITY IS ESTABLISHED. AS A MINIMUM, TEMPORARY SUPPORTS SHALL BE PROVIDED AT EA. GRID IN BOTH DIRECTIONS.

ALUMINUM

1. PROVIDE ALLOY 6061-T6 UNLESS NOTED OTHERWISE.

© Bolton & Menk, Inc. 2017, All Rights Reserved

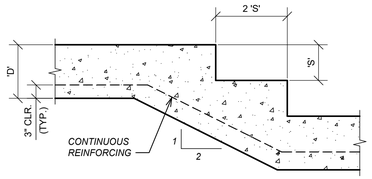

1 / 3.02 STEPPED FOOTING DETAIL

NO SCALE

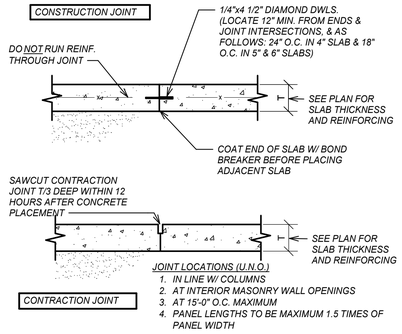

2 / 3.02 CONSTR. / CONTRACTION JOINT

NO SCALE

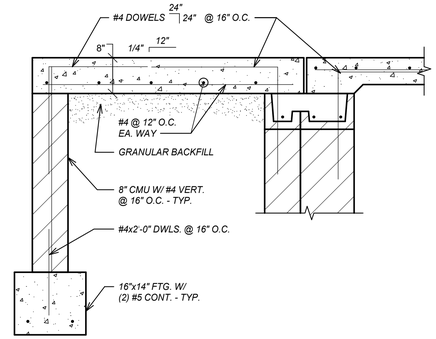

3 / 3.02 TYP. STOOP SECTION

3/4" = 1'-0"

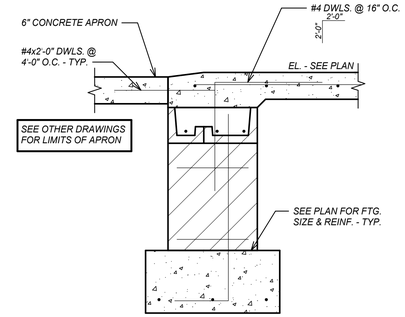

4 / 3.02 SECTION

3/4" = 1'-0"

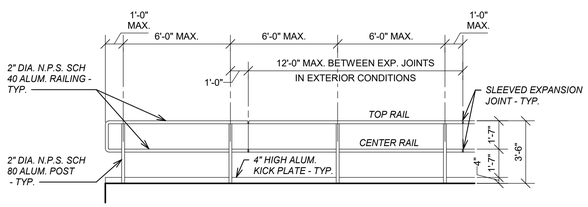

5 / 3.02 TYPICAL RAILING ELEVATION

1/4" = 1'-0"

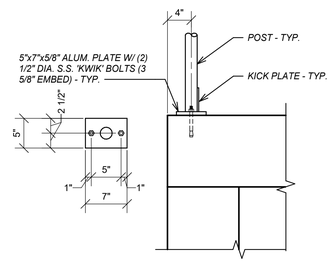

6 / 3.02 TYP. RAILING CONNECTION

1" = 1'-0"

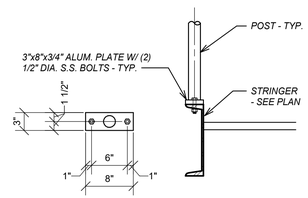

7 / 3.02 TYP. RAILING CONNECTION

1" = 1'-0"

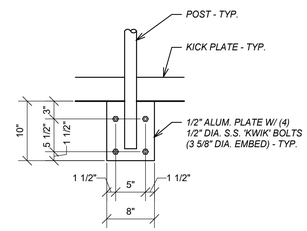

8 / 3.02 TYP. RAILING CONNECTION

1" = 1'-0"

SCALES SHOWN ON DRAWINGS ARE FOR 24"x36" SIZE SHEETS ONLY. DRAWINGS PLOTTED ON ANY OTHER SIZE SHEETS NEED TO HAVE SCALES ADJUSTED ACCORDINGLY.

© Bolton & Menk, Inc. 2017, All Rights Reserved

DWR 12/5/2017 11:23:22 AM

LSE JOB#: 17-223

LSEngineers
234 N. Main St.
LeSueur, MN 56058

I HEREBY CERTIFY THAT THIS PLAN, SPECIFICATION OR REPORT WAS PREPARED BY ME OR UNDER MY DIRECT SUPERVISION, AND THAT I AM A DULY LICENSED PROFESSIONAL ENGINEER UNDER THE LAWS OF THE STATE OF MINNESOTA

SIGNATURE: Will P. Lehnertz TYPED OR PRINTED NAME: William P Lehnertz

DATE: 12/4/17 LICENSE NO. 14965

BOLTON & MENK

www.bolton-menk.com

REV.	BY	DATE

CITY OF WINDOM, MINNESOTA

WASTEWATER TREATMENT FACILITY IMPROVEMENTS

STANDARD DETAILS

SHEET 3.02

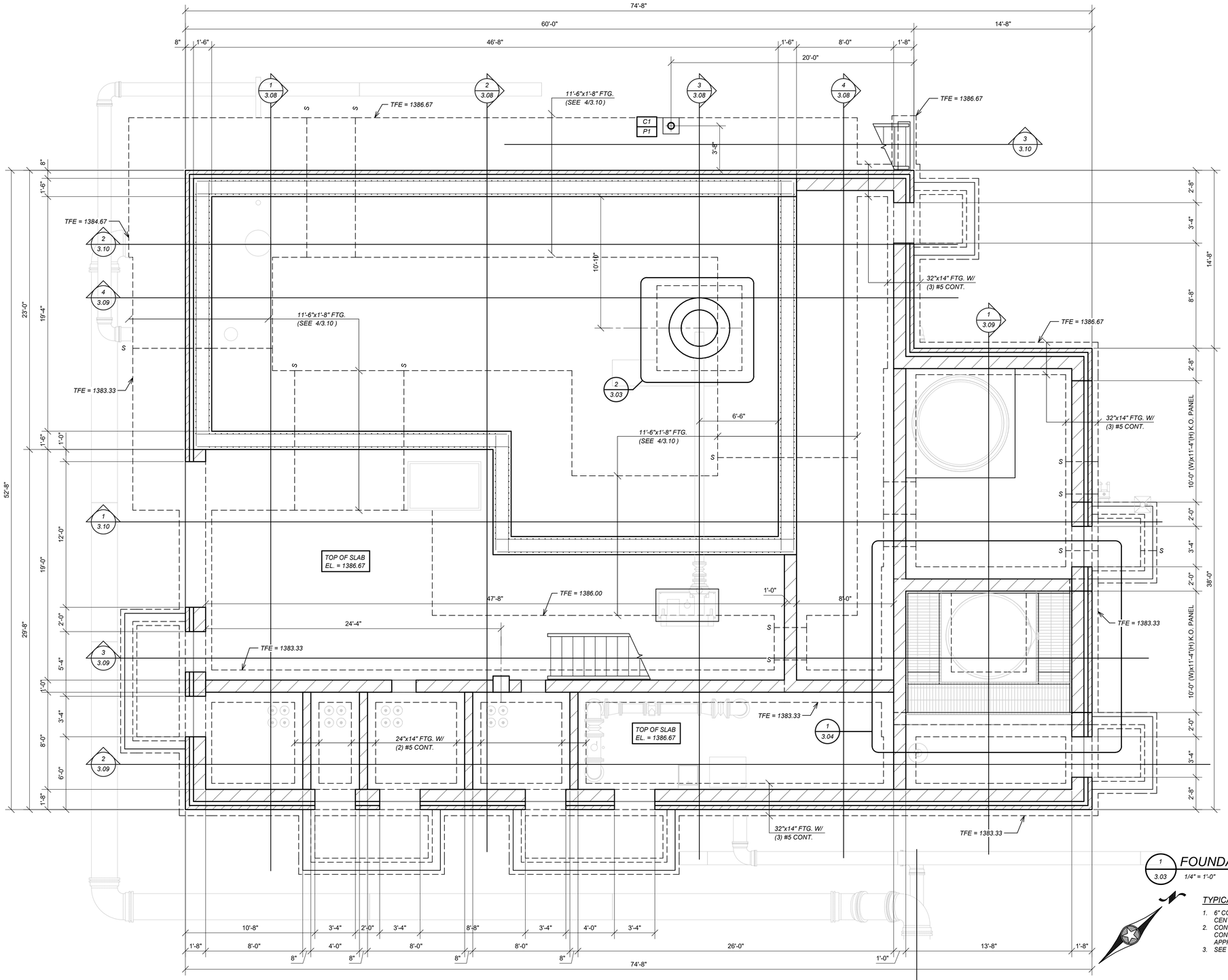

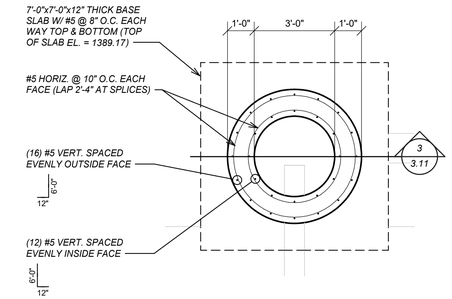

2/3.03 ENLARGED FOUNDATION PLAN

3/8" = 1'-0"

1/3.03 FOUNDATION PLAN

1/4" = 1'-0"

TYPICAL UNLESS NOTED OTHERWISE:

1. 6" CONCRETE SLAB ON GRADE W/ #4 @ 12" O.C. EA. WAY CENTERED (SEE PLAN FOR TOP OF SLAB ELEV.)
2. CONTRACTOR LAYOUT SLAB CONTRATION JOINTS FOR 6" CONCRETE SLAB ON GRADE AS PER 2/3.02 AND SUBMIT FOR APPROVAL
3. SEE 1/3.02 FOR STEPPED FOOTING DETAIL

SCALES SHOWN ON DRAWINGS ARE FOR 24"x36" SIZE SHEETS ONLY. DRAWINGS PLOTTED ON ANY OTHER SIZE SHEETS NEED TO HAVE SCALES ADJUSTED ACCORDINGLY.

© Bolton & Menk, Inc. 2017, All Rights Reserved

DWR 12/5/2017 11:23:31 AM

LSE JOB#: 17-223

LSEngineers
234 N. Main St.
LeSueur, MN 56058

I HEREBY CERTIFY THAT THIS PLAN, SPECIFICATION OR REPORT WAS PREPARED BY ME OR UNDER MY DIRECT SUPERVISION, AND THAT I AM A DULY LICENSED PROFESSIONAL ENGINEER UNDER THE LAWS OF THE STATE OF MINNESOTA

SIGNATURE: Will P. Lehnertz TYPED OR PRINTED NAME: William P Lehnertz

DATE: 12/4/17 LICENSE NO. 14965

BOLTON & MENK

www.bolton-menk.com

REV.	BY	DATE
A	DWR	12-4-17

CITY OF WINDOM, MINNESOTA

WASTEWATER TREATMENT FACILITY IMPROVEMENTS

PRETREATMENT BUILDING
FOUNDATION PLAN

SHEET 3.03

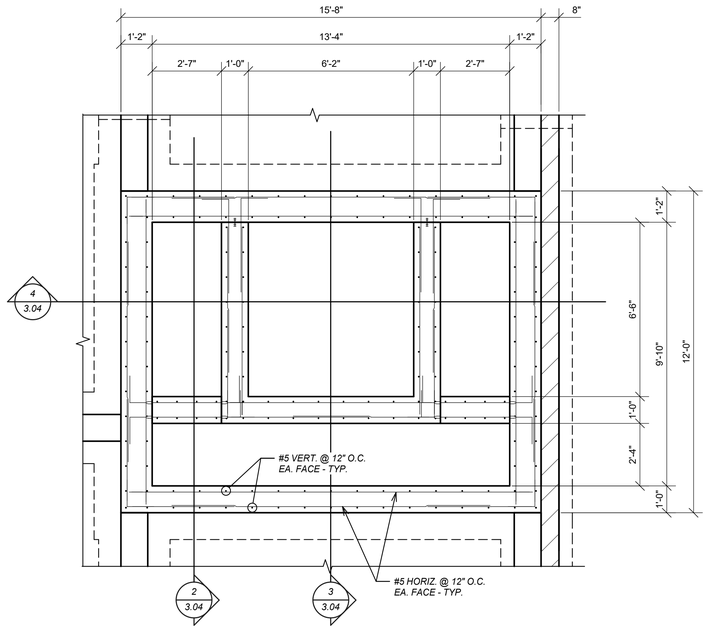

1 3.04 PT (FOUNDATION) - Callout 1

3/8" = 1'-0"

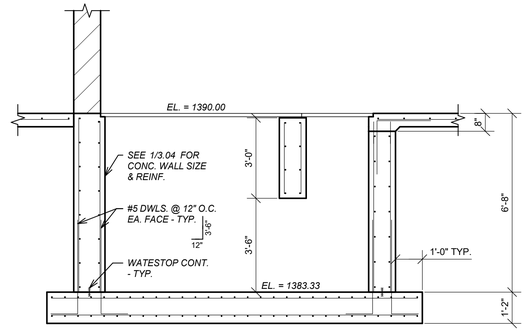

2 3.04 SECTION

3/8" = 1'-0"

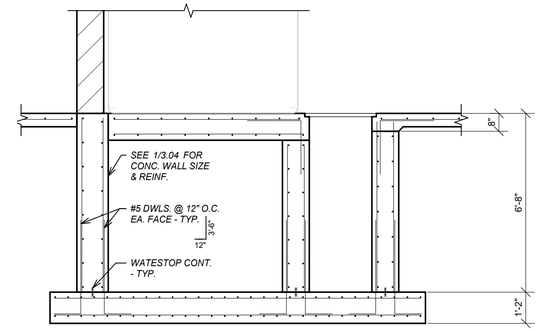

3 3.04 SECTION

3/8" = 1'-0"

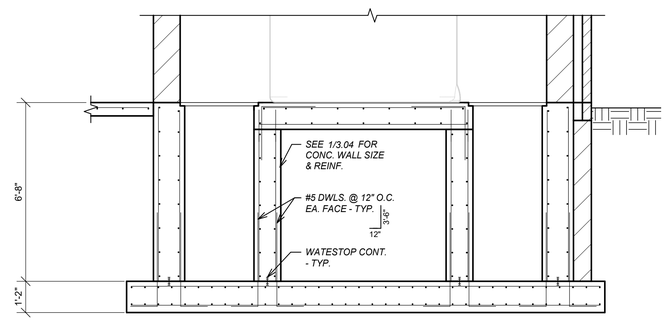

4 3.04 SECTION

3/8" = 1'-0"

SCALES SHOWN ON DRAWINGS ARE FOR 24"x36" SIZE SHEETS ONLY. DRAWINGS PLOTTED ON ANY OTHER SIZE SHEETS NEED TO HAVE SCALES ADJUSTED ACCORDINGLY.

© Bolton & Menk, Inc. 2017, All Rights Reserved

DWR 12/5/2017 11:23:52 AM

LSE JOB#: 17-223

LSEngineers
234 N. Main St.
LeSueur, MN 56058

I HEREBY CERTIFY THAT THIS PLAN, SPECIFICATION OR REPORT WAS PREPARED BY ME OR UNDER MY DIRECT SUPERVISION, AND THAT I AM A DULY LICENSED PROFESSIONAL ENGINEER UNDER THE LAWS OF THE STATE OF MINNESOTA

SIGNATURE: Will P. Lehnertz TYPED OR PRINTED NAME: William P Lehnertz

DATE: 12/4/17 LICENSE NO. 14965

BOLTON & MENK

www.bolton-menk.com

REV.	BY	DATE

CITY OF WINDOM, MINNESOTA

WASTEWATER TREATMENT FACILITY IMPROVEMENTS

PRETREATMENT BUILDING
PLANS & SECTIONS

SHEET 3.04

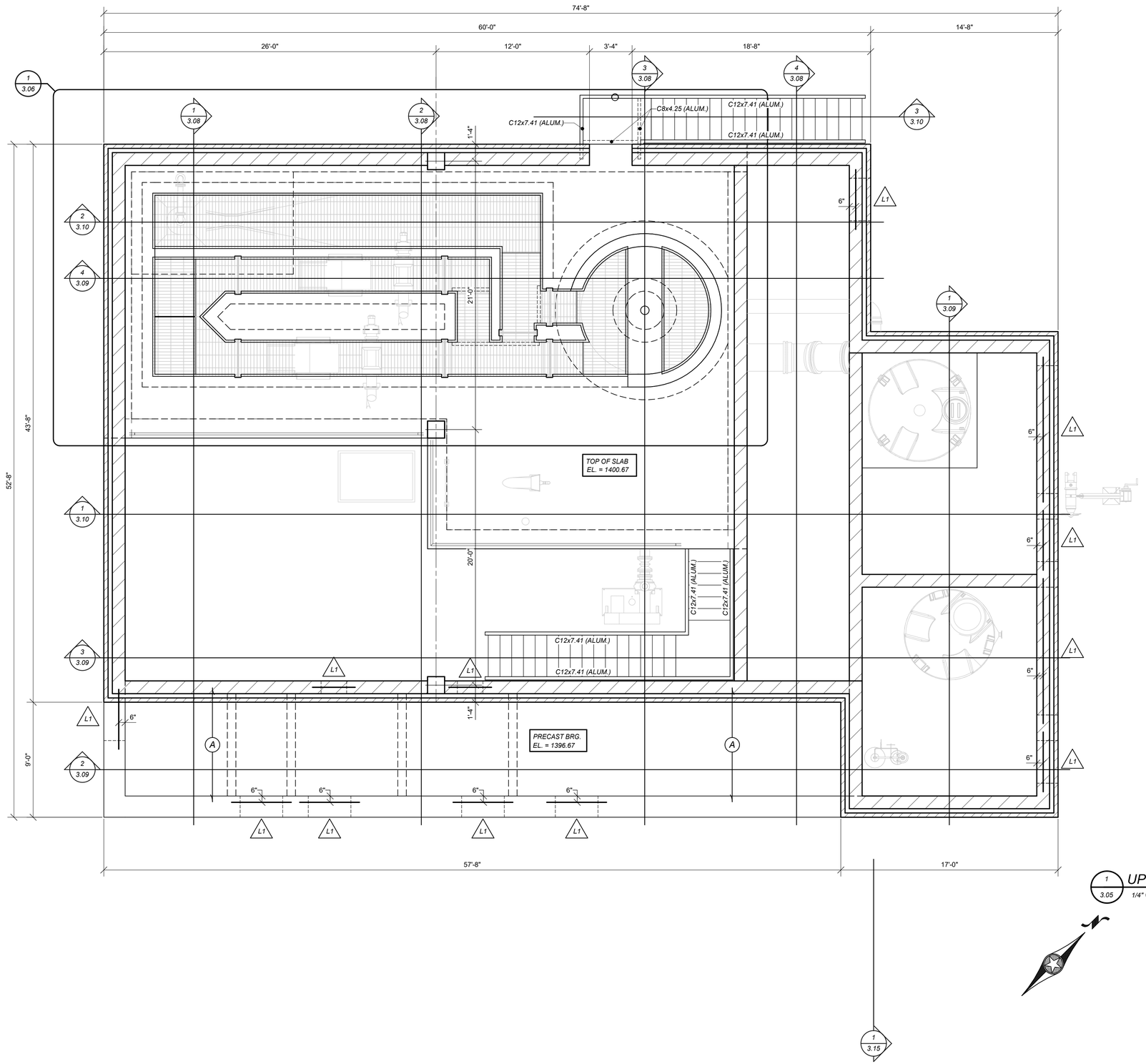

FRAMING SCHEDULE

A	8" PRECAST PLANK DESIGN FOR SUPERIMPOSED LOAD = 80psf (DL = 15psf + LL = 65psf) + SNOWDRIFT + MASONRY VENEER LOAD
B	12" PRECAST PLANK DESIGN FOR SUPERIMPOSED LOAD = 80psf (DL = 15psf + LL = 65psf)

LINTEL SCHEDULE

MARK	LINTEL
L1	W8x18 W/ 5/16" BOTTOM PLATE
L2	W16x26 W/ 5/16" BOTTOM PLATE

NOTE:
1. BOTTOM PLATE TO BE NOMINAL WALL THICKNESS - 1". EXTEND BOTTOM PLATE TO ENDS OF LINTEL - TYP.
2. UNLESS NOTED OTHERWISE STEEL LINTEL IS CENTERED IN CMU WALL

1 / 3.05 UPPER FLOOR / LOWER ROOF FRAMING PLAN

1/4" = 1'-0"

1 / 3.15

SCALES SHOWN ON DRAWINGS ARE FOR 24"x36" SIZE SHEETS ONLY. DRAWINGS PLOTTED ON ANY OTHER SIZE SHEETS NEED TO HAVE SCALES ADJUSTED ACCORDINGLY.

© Bolton & Menk, Inc. 2017, All Rights Reserved

DWR 12/5/2017 11:24:01 AM

LSE JOB#: 17-223

LSEngineers
234 N. Main St.
LeSueur, MN 56058

I HEREBY CERTIFY THAT THIS PLAN, SPECIFICATION OR REPORT WAS PREPARED BY ME OR UNDER MY DIRECT SUPERVISION, AND THAT I AM A DULY LICENSED PROFESSIONAL ENGINEER UNDER THE LAWS OF THE STATE OF MINNESOTA

SIGNATURE: Will P. Lehnertz TYPED OR PRINTED NAME: William P Lehnertz

DATE: 12/4/17 LICENSE NO. 14965

BOLTON & MENK

www.bolton-menk.com

REV.	BY	DATE

CITY OF WINDOM, MINNESOTA

WASTEWATER TREATMENT FACILITY IMPROVEMENTS

PRETREATMENT BUILDING
PLANS

SHEET 3.05

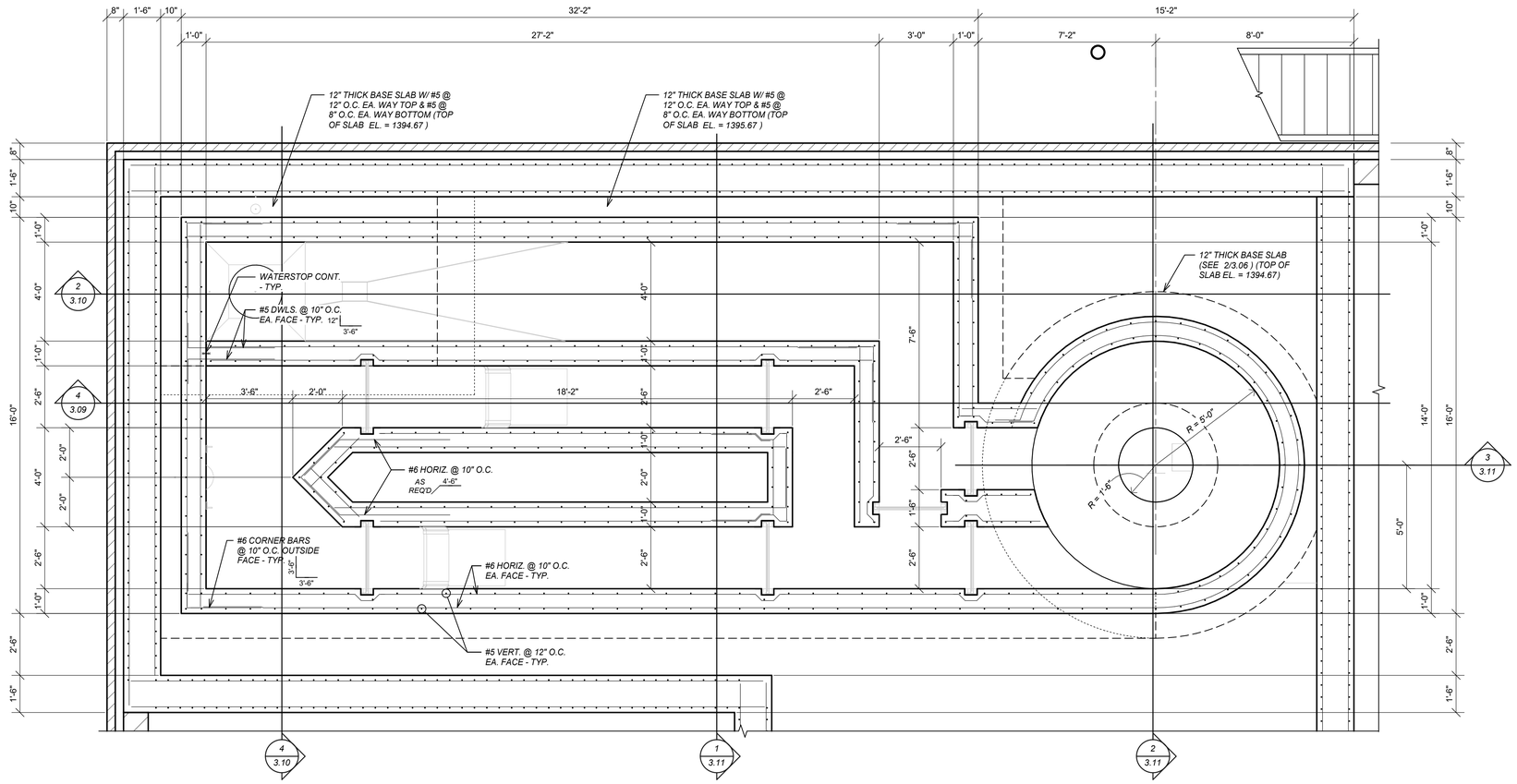

1 3.06 WALL PLAN

3/8" = 1'-0"

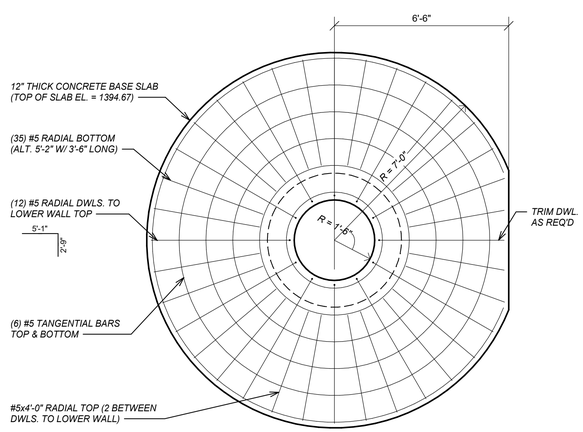

2 3.06 INTERMEDIATE BASE SLAB

3/8" = 1'-0"

SCALES SHOWN ON DRAWINGS ARE FOR 24"x36" SIZE SHEETS ONLY. DRAWINGS PLOTTED ON ANY OTHER SIZE SHEETS NEED TO HAVE SCALES ADJUSTED ACCORDINGLY.

© Bolton & Menk, Inc. 2017, All Rights Reserved

DWR 12/5/2017 11:24:07 AM

LSE JOB#: 17-223

LSEngineers
234 N. Main St.
LeSueur, MN 56058

I HEREBY CERTIFY THAT THIS PLAN, SPECIFICATION OR REPORT WAS PREPARED BY ME OR UNDER MY DIRECT SUPERVISION, AND THAT I AM A DULY LICENSED PROFESSIONAL ENGINEER UNDER THE LAWS OF THE STATE OF MINNESOTA

SIGNATURE: Wil. P. Lehnertz TYPED OR PRINTED NAME: William P Lehnertz

DATE: 12/4/17 LICENSE NO. 14965

BOLTON & MENK

www.bolton-menk.com

REV.	BY	DATE

CITY OF WINDOM, MINNESOTA

WASTEWATER TREATMENT FACILITY IMPROVEMENTS

PRETREATMENT BUILDING
WALL PLAN

SHEET 3.06

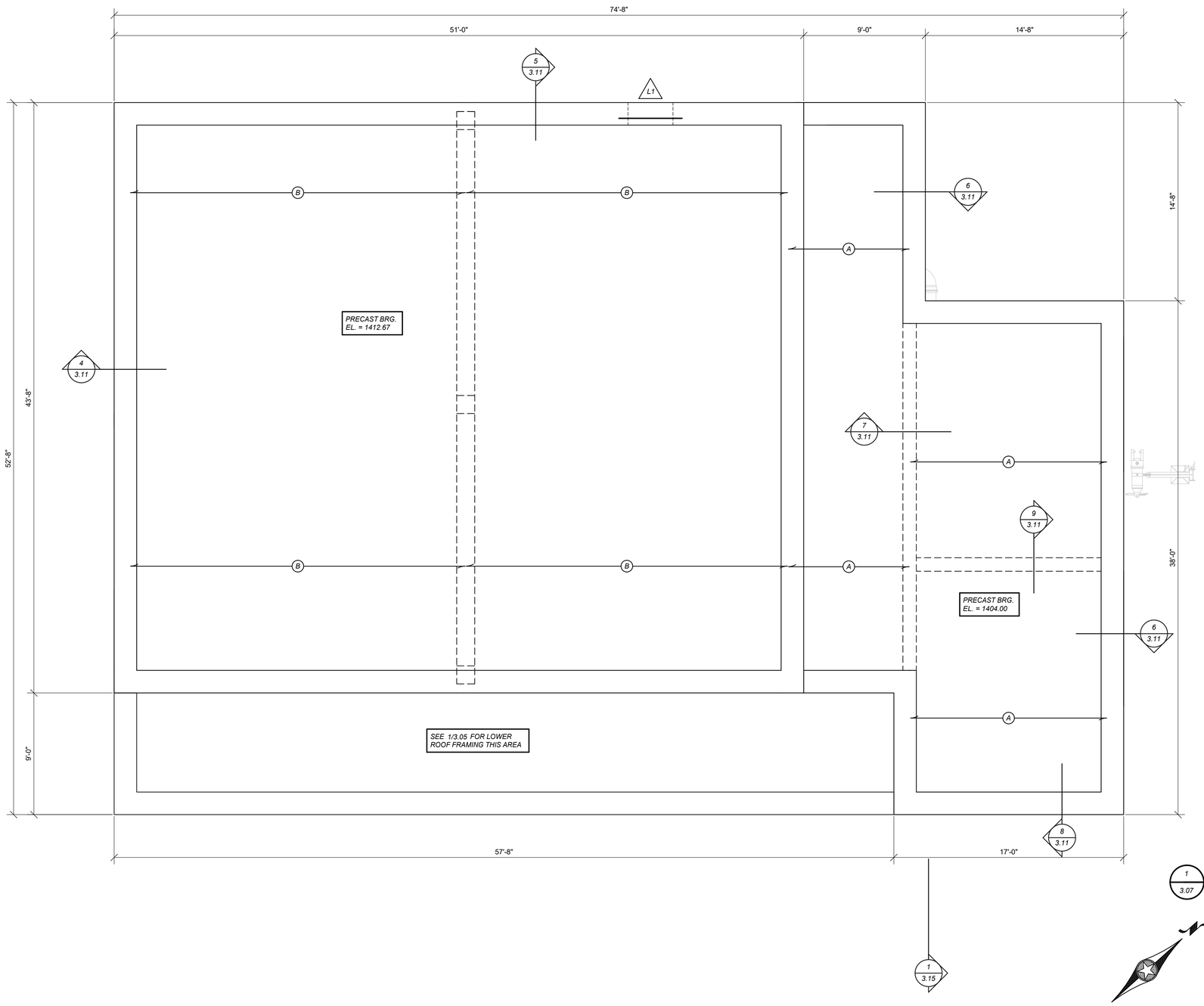

FRAMING SCHEDULE

A	8" PRECAST PLANK DESIGN FOR SUPERIMPOSED LOAD = 80psf (DL = 15psf + LL = 65psf) + SNOWDRIFT + MASONRY VENEER LOAD
B	12" PRECAST PLANK DESIGN FOR SUPERIMPOSED LOAD = 80psf (DL = 15psf + LL = 65psf)

LINTEL SCHEDULE

MARK	LINTEL
L1	W8x18 W/ 5/16" BOTTOM PLATE
L2	W16x26 W/ 5/16" BOTTOM PLATE

NOTE:
1. BOTTOM PLATE TO BE NOMINAL WALL THICKNESS - 1". EXTEND BOTTOM PLATE TO ENDS OF LINTEL - TYP.
2. UNLESS NOTED OTHERWISE STEEL LINTEL IS CENTERED IN CMU WALL

1 / 3.07 UPPER ROOF FRAMING PLAN

1/4" = 1'-0"

SCALES SHOWN ON DRAWINGS ARE FOR 24"x36" SIZE SHEETS ONLY. DRAWINGS PLOTTED ON ANY OTHER SIZE SHEETS NEED TO HAVE SCALES ADJUSTED ACCORDINGLY.

© Bolton & Menk, Inc. 2017, All Rights Reserved

DWR 12/5/2017 11:24:10 AM

LSE JOB#: 17-223

LSEngineers
234 N. Main St.
LeSueur, MN 56058

I HEREBY CERTIFY THAT THIS PLAN, SPECIFICATION OR REPORT WAS PREPARED BY ME OR UNDER MY DIRECT SUPERVISION, AND THAT I AM A DULY LICENSED PROFESSIONAL ENGINEER UNDER THE LAWS OF THE STATE OF MINNESOTA

SIGNATURE: Will P Lehnertz TYPED OR PRINTED NAME: William P Lehnertz

DATE: 12/4/17 LICENSE NO. 14965

BOLTON & MENK

www.bolton-menk.com

REV.	BY	DATE

CITY OF WINDOM, MINNESOTA

WASTEWATER TREATMENT FACILITY IMPROVEMENTS

PRETREATMENT BUILDING
UPPER ROOF FRAMING PLAN

SHEET 3.07

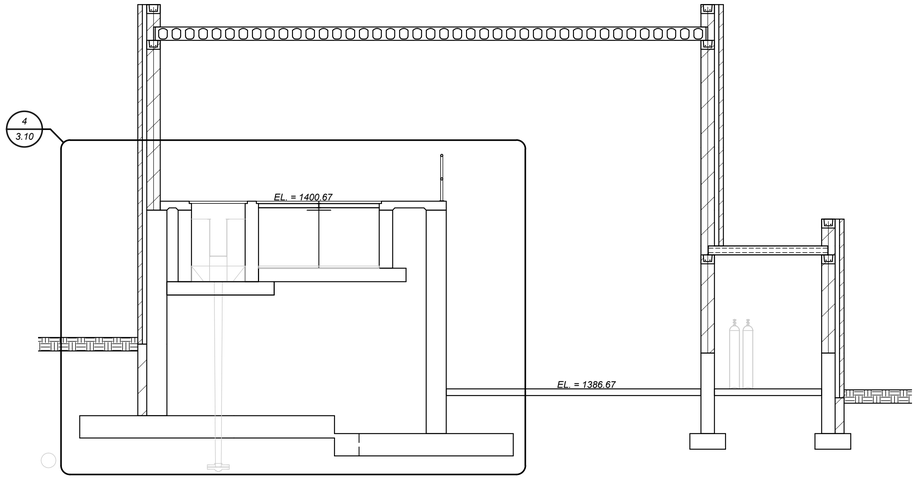

1 / 3.08 **Section 20**
3/16" = 1'-0"

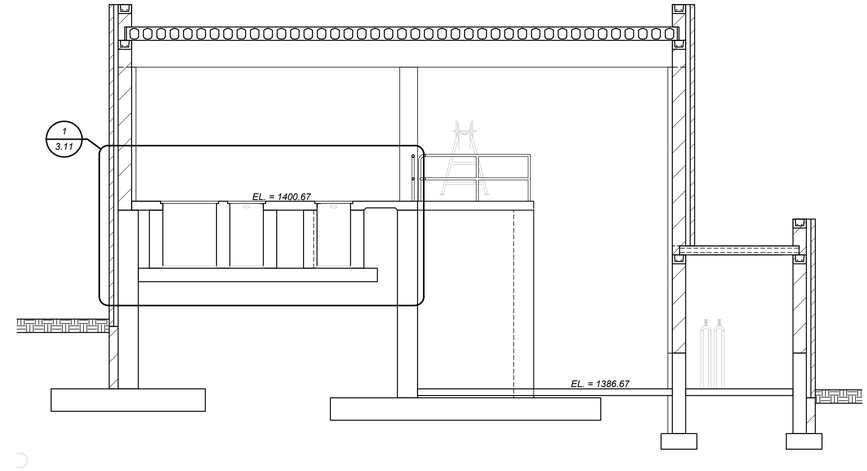

2 / 3.08 **Section 21**
3/16" = 1'-0"

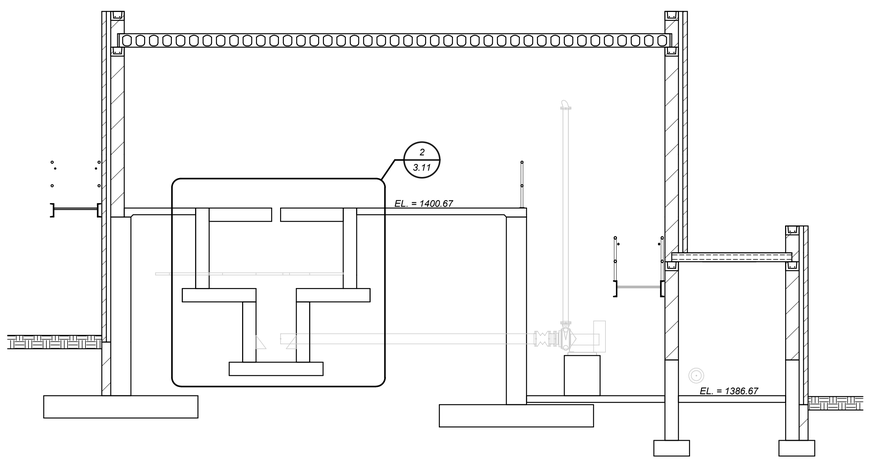

3 / 3.08 **Section 22**
3/16" = 1'-0"

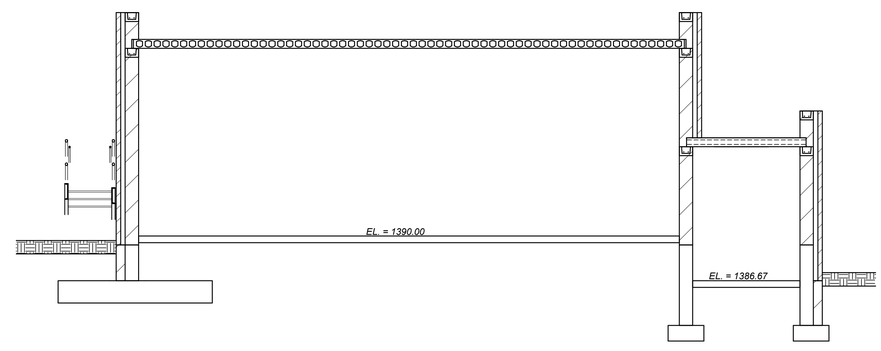

4 / 3.08 **Section 23**
3/16" = 1'-0"

SCALES SHOWN ON DRAWINGS ARE FOR 24"x36" SIZE SHEETS ONLY. DRAWINGS PLOTTED ON ANY OTHER SIZE SHEETS NEED TO HAVE SCALES ADJUSTED ACCORDINGLY.

© Bolton & Menk, Inc. 2017, All Rights Reserved
DWR 12/5/2017 11:24:37 AM

LSE JOB#: 17-223
LSEngineers
234 N. Main St.
LeSueur, MN 56058

I HEREBY CERTIFY THAT THIS PLAN, SPECIFICATION OR REPORT WAS PREPARED BY ME OR UNDER MY DIRECT SUPERVISION, AND THAT I AM A DULY LICENSED PROFESSIONAL ENGINEER UNDER THE LAWS OF THE STATE OF MINNESOTA

SIGNATURE: Will P. Lehnertz TYPED OR PRINTED NAME: William P Lehnertz
DATE: 12/4/17 LICENSE NO. 14965

BOLTON & MENK
www.bolton-menk.com

REV.	BY	DATE

CITY OF WINDOM, MINNESOTA
WASTEWATER TREATMENT FACILITY IMPROVEMENTS
PRETREATMENT BUILDING
SECTIONS

SHEET 3.08

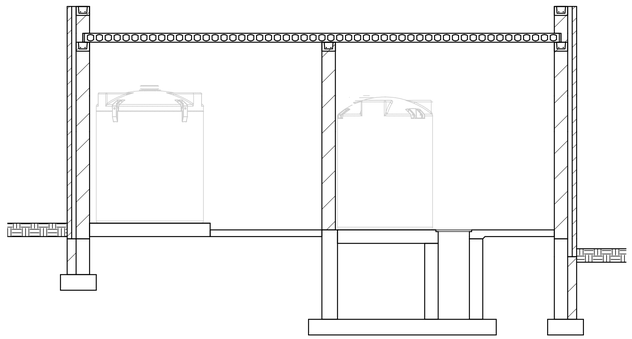

1 / 3.09 **Section 24**
3/16" = 1'-0"

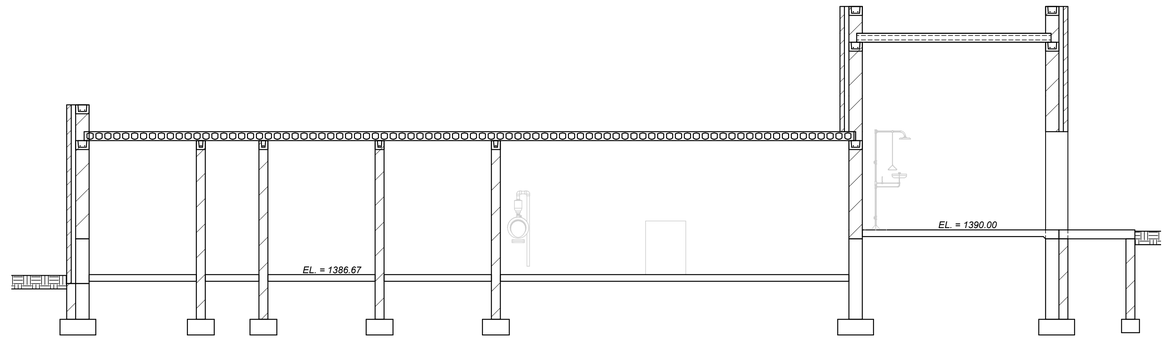

2 / 3.09 **Section 25**
3/16" = 1'-0"

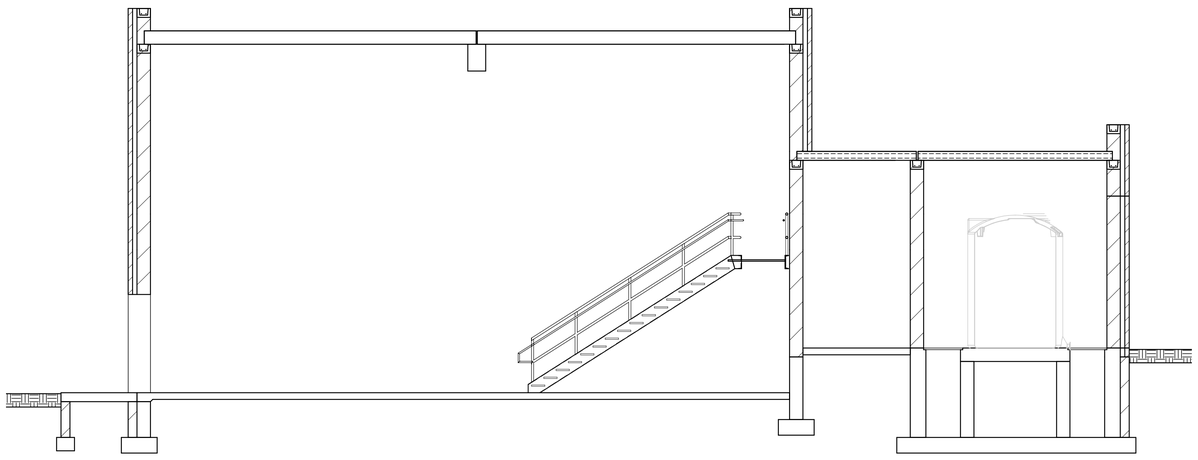

3 / 3.09 **Section 26**
3/16" = 1'-0"

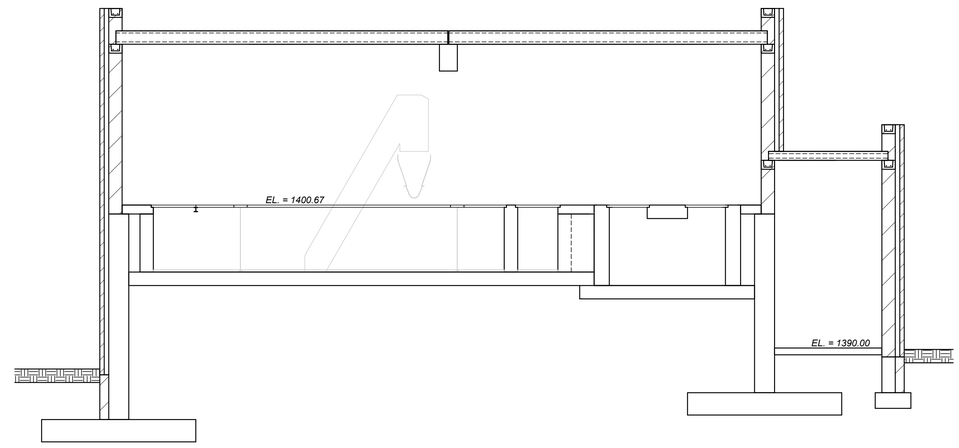

4 / 3.09 **Section 28**
3/16" = 1'-0"

SCALES SHOWN ON DRAWINGS ARE FOR 24"x36" SIZE SHEETS ONLY. DRAWINGS PLOTTED ON ANY OTHER SIZE SHEETS NEED TO HAVE SCALES ADJUSTED ACCORDINGLY.

© Bolton & Menk, Inc. 2017, All Rights Reserved
DWR 12/5/2017 11:24:54 AM

LSE JOB#: 17-223
LSEngineers
234 N. Main St.
LeSueur, MN 56058

I HEREBY CERTIFY THAT THIS PLAN, SPECIFICATION OR REPORT WAS PREPARED BY ME OR UNDER MY DIRECT SUPERVISION, AND THAT I AM A DULY LICENSED PROFESSIONAL ENGINEER UNDER THE LAWS OF THE STATE OF MINNESOTA

SIGNATURE: Will P. Lehnertz TYPED OR PRINTED NAME: William P Lehnertz
DATE: 12/4/17 LICENSE NO. 14965

BOLTON & MENK
www.bolton-menk.com

REV.	BY	DATE

CITY OF WINDOM, MINNESOTA
WASTEWATER TREATMENT FACILITY IMPROVEMENTS
PRETREATMENT BUILDING
SECTIONS

SHEET 3.09

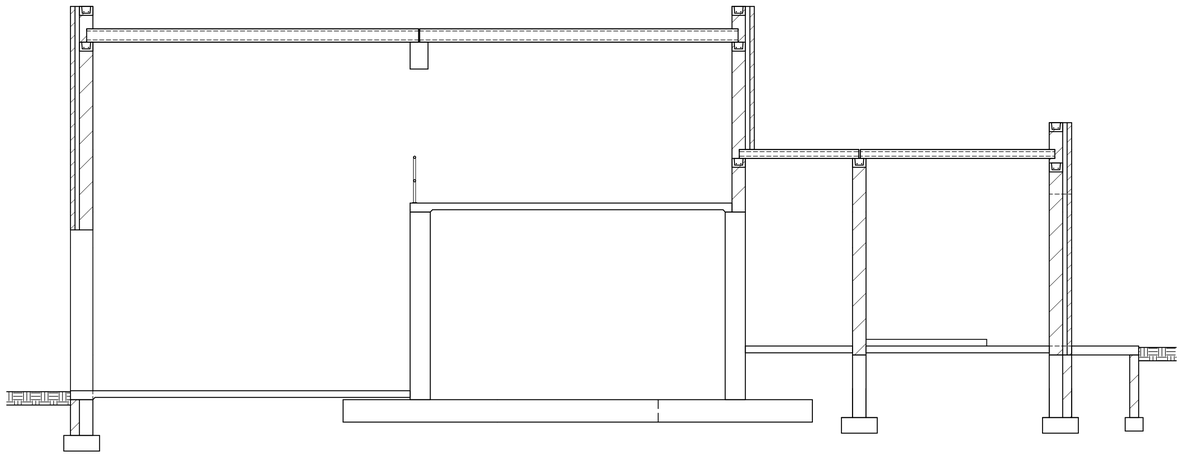

1 / 3.10 Section 27

3/16" = 1'-0"

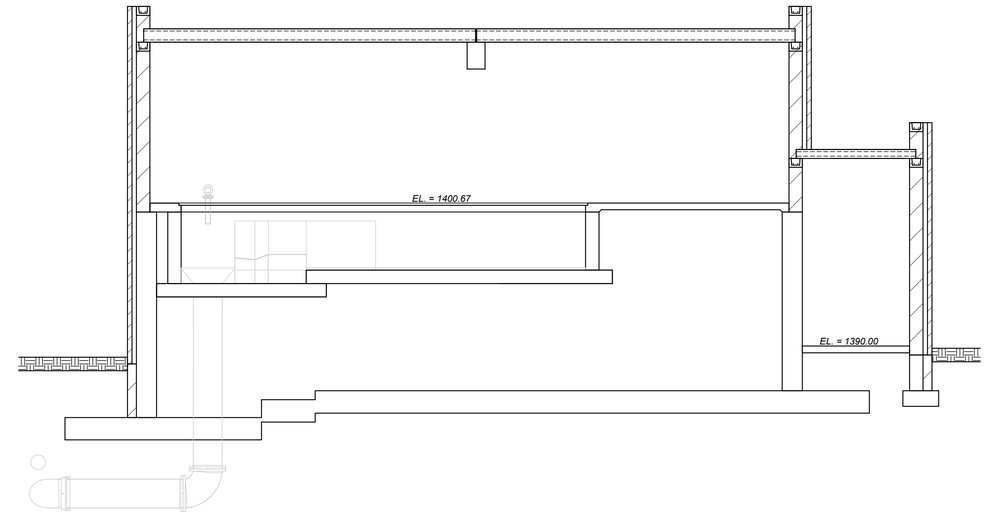

2 / 3.10 Section 29

3/16" = 1'-0"

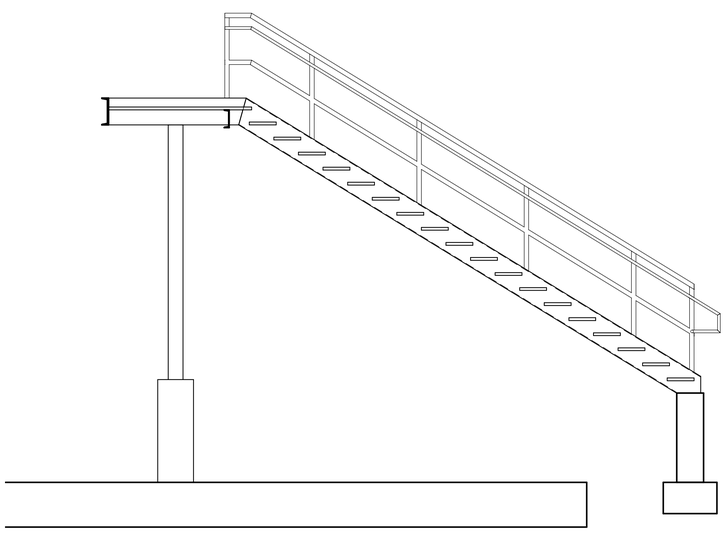

3 / 3.10 EXTERIOR STAIR

3/8" = 1'-0"

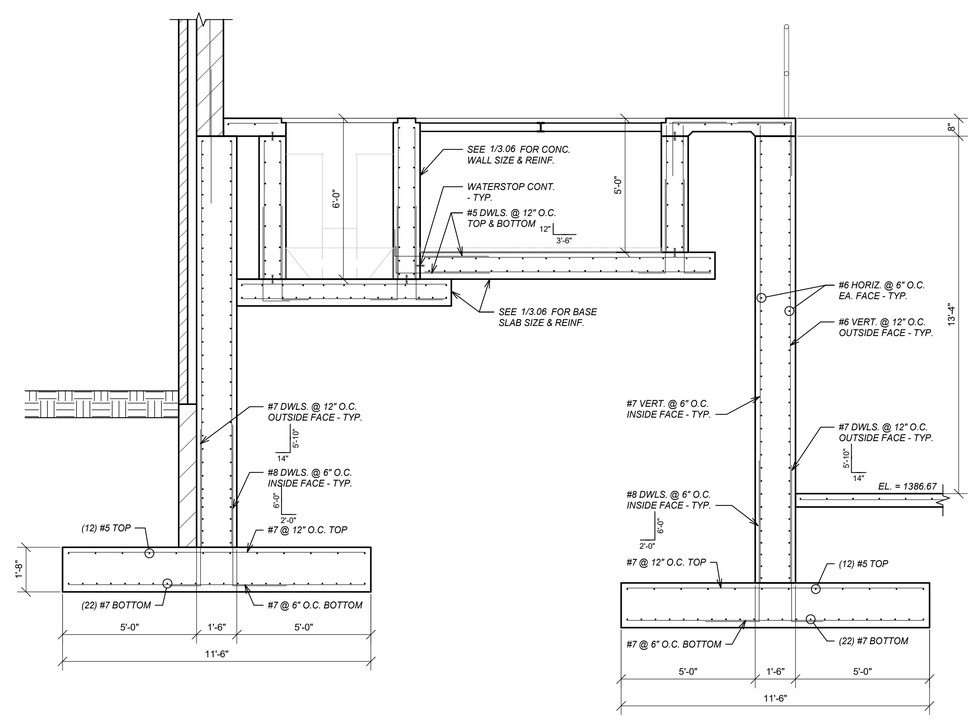

4 / 3.10 Section 20 - Callout 1

3/8" = 1'-0"

SCALES SHOWN ON DRAWINGS ARE FOR 24"x36" SIZE SHEETS ONLY. DRAWINGS PLOTTED ON ANY OTHER SIZE SHEETS NEED TO HAVE SCALES ADJUSTED ACCORDINGLY.

© Bolton & Menk, Inc. 2017, All Rights Reserved

DWR 12/5/2017 11:25:03 AM

LSE JOB#: 17-223

LSEngineers
234 N. Main St.
LeSueur, MN 56058

I HEREBY CERTIFY THAT THIS PLAN, SPECIFICATION OR REPORT WAS PREPARED BY ME OR UNDER MY DIRECT SUPERVISION, AND THAT I AM A DULY LICENSED PROFESSIONAL ENGINEER UNDER THE LAWS OF THE STATE OF MINNESOTA

SIGNATURE: Will P Lehnertz
TYPED OR PRINTED NAME: William P Lehnertz
DATE: 12/4/17
LICENSE NO. 14965

BOLTON & MENK

www.bolton-menk.com

REV.	BY	DATE

CITY OF WINDOM, MINNESOTA

WASTEWATER TREATMENT FACILITY IMPROVEMENTS

PRETREATMENT BUILDING
SECTIONS

SHEET 3.10

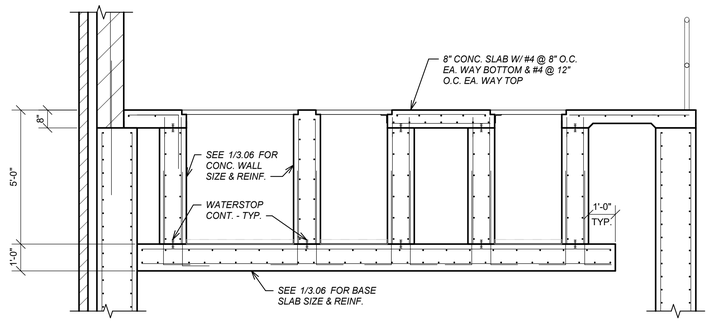

1 / 3.11 Section 21 - Callout 1

3/8" = 1'-0"

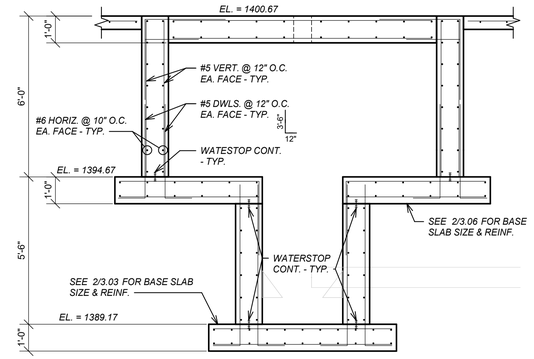

2 / 3.11 Section 22 - Callout 1

3/8" = 1'-0"

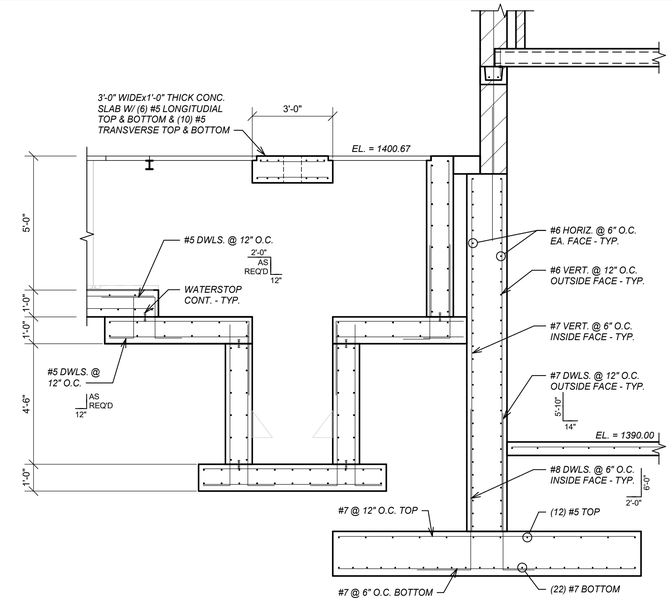

3 / 3.11 Section 34

3/8" = 1'-0"

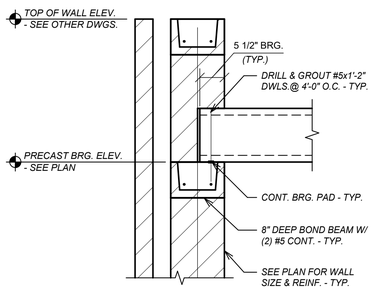

4 / 3.11 SECTION

3/4" = 1'-0"

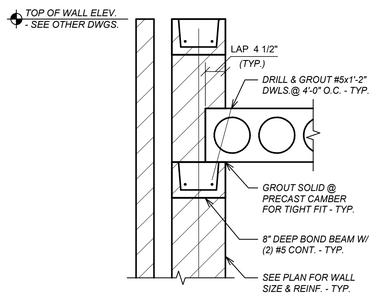

5 / 3.11 SECTION

3/4" = 1'-0"

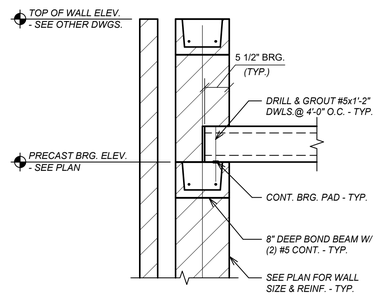

6 / 3.11 SECTION

3/4" = 1'-0"

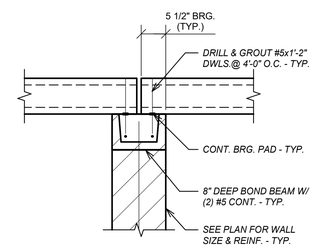

7 / 3.11 SECTION

3/4" = 1'-0"

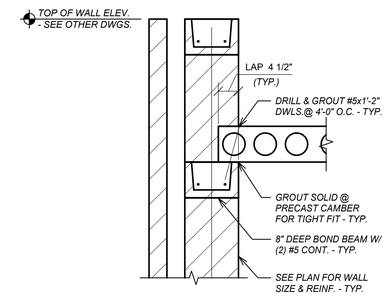

8 / 3.11 SECTION

3/4" = 1'-0"

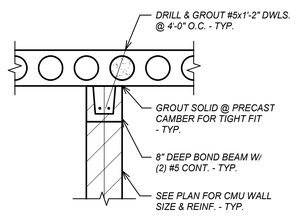

9 / 3.11 SECTION

3/4" = 1'-0"

SCALES SHOWN ON DRAWINGS ARE FOR 24"x36" SIZE SHEETS ONLY. DRAWINGS PLOTTED ON ANY OTHER SIZE SHEETS NEED TO HAVE SCALES ADJUSTED ACCORDINGLY.

© Bolton & Menk, Inc. 2017, All Rights Reserved

DWR 12/5/2017 11:25:12 AM

LSE JOB#: 17-223

LSEngineers
234 N. Main St.
LeSueur, MN 56058

I HEREBY CERTIFY THAT THIS PLAN, SPECIFICATION OR REPORT WAS PREPARED BY ME OR UNDER MY DIRECT SUPERVISION, AND THAT I AM A DULY LICENSED PROFESSIONAL ENGINEER UNDER THE LAWS OF THE STATE OF MINNESOTA

SIGNATURE: Will P. Lehnertz TYPED OR PRINTED NAME: William P Lehnertz

DATE: 12/4/17 LICENSE NO. 14965

BOLTON & MENK

www.bolton-menk.com

REV.	BY	DATE

CITY OF WINDOM, MINNESOTA

WASTEWATER TREATMENT FACILITY IMPROVEMENTS

PRETREATMENT BUILDING
SECTIONS

SHEET 3.11

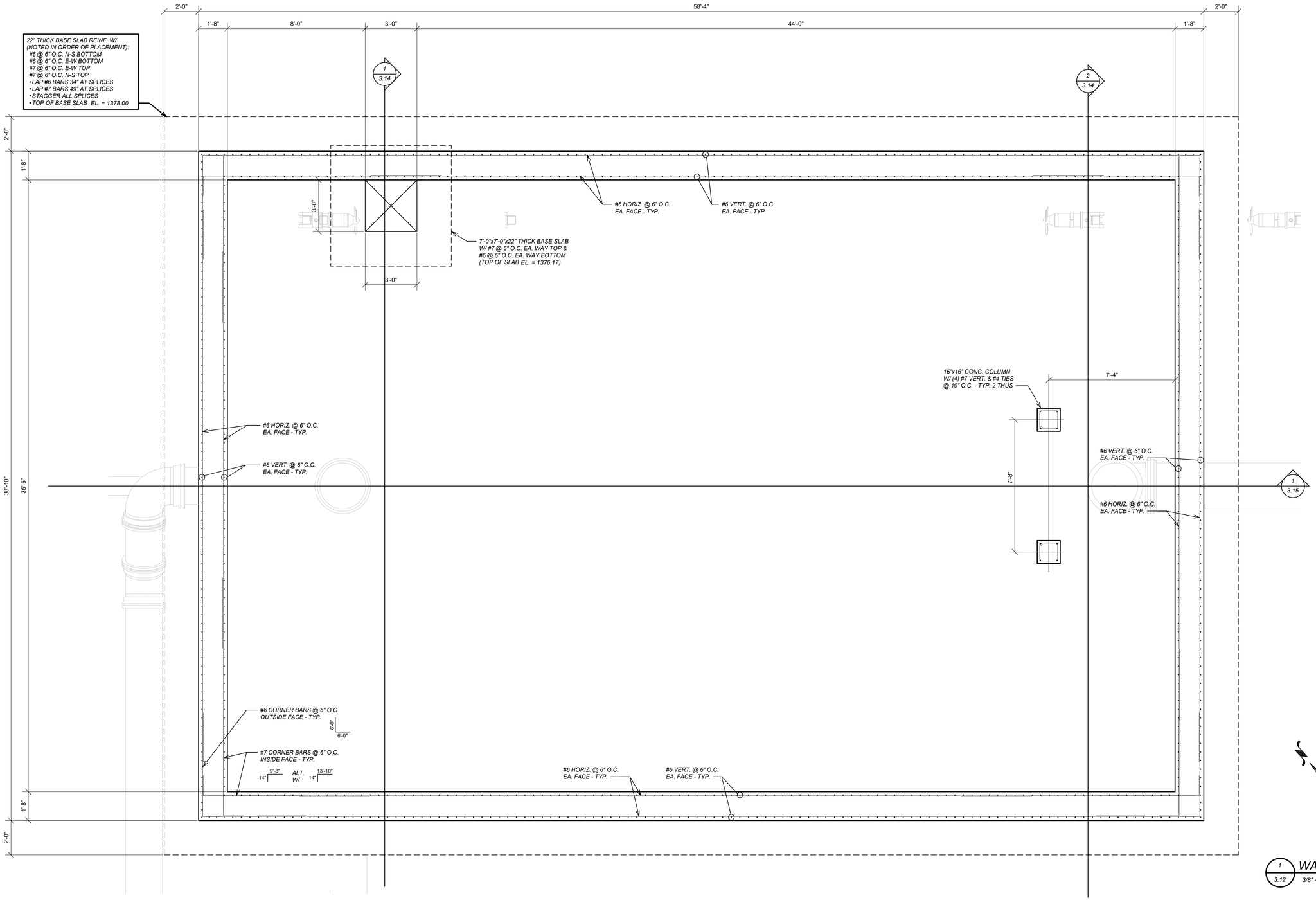

1 / 3.12 **WALL PLAN**

3/8" = 1'-0"

SCALES SHOWN ON DRAWINGS ARE FOR 24"x36" SIZE SHEETS ONLY. DRAWINGS PLOTTED ON ANY OTHER SIZE SHEETS NEED TO HAVE SCALES ADJUSTED ACCORDINGLY.

© Bolton & Menk, Inc. 2017, All Rights Reserved

DWR 12/5/2017 11:25:16 AM

LSE JOB#: 17-223

LSEngineers
234 N. Main St.
LeSueur, MN 56058

I HEREBY CERTIFY THAT THIS PLAN, SPECIFICATION OR REPORT WAS PREPARED BY ME OR UNDER MY DIRECT SUPERVISION, AND THAT I AM A DULY LICENSED PROFESSIONAL ENGINEER UNDER THE LAWS OF THE STATE OF MINNESOTA

SIGNATURE: Will P Lehnertz TYPED OR PRINTED NAME: William P Lehnertz

DATE: 12/4/17 LICENSE NO. 14965

BOLTON & MENK

www.bolton-menk.com

REV.	BY	DATE

CITY OF WINDOM, MINNESOTA

WASTEWATER TREATMENT FACILITY IMPROVEMENTS

ANAEROBIC BASIN
WALL PLAN

SHEET 3.12

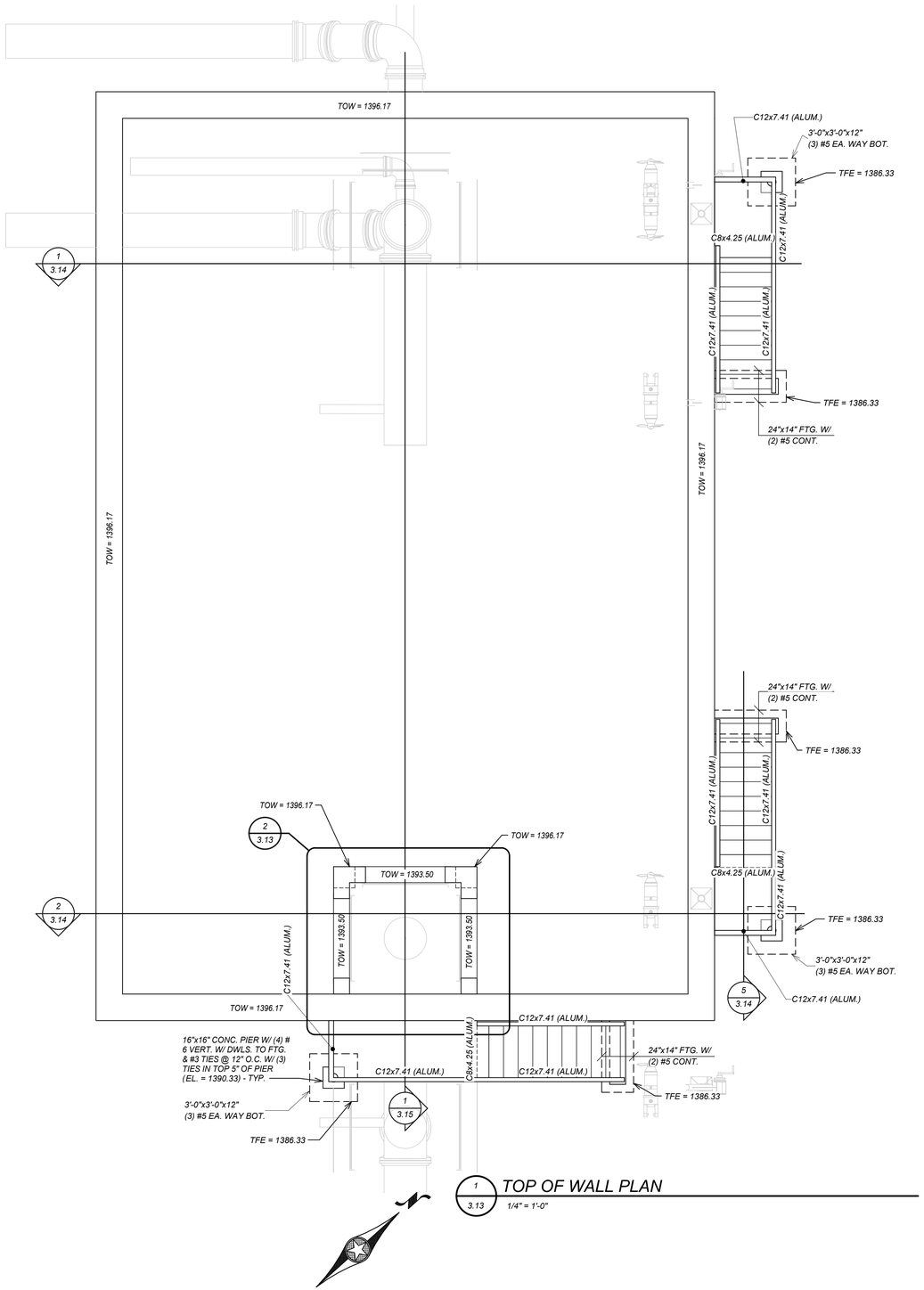

1 3.13 TOP OF WALL PLAN

1/4" = 1'-0"

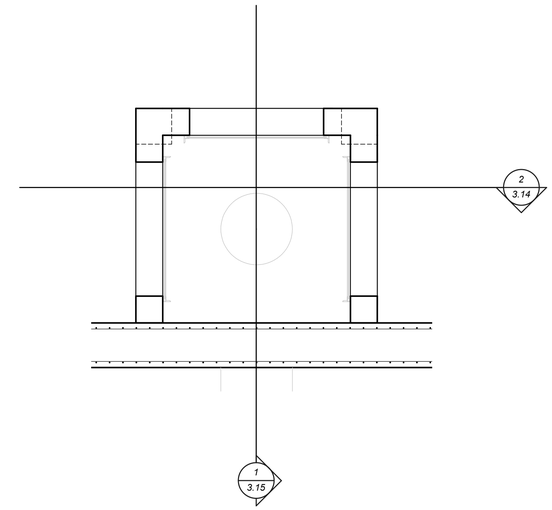

2 3.13 WALL PLAN

3/8" = 1'-0"

SCALES SHOWN ON DRAWINGS ARE FOR 24"x36" SIZE SHEETS ONLY. DRAWINGS PLOTTED ON ANY OTHER SIZE SHEETS NEED TO HAVE SCALES ADJUSTED ACCORDINGLY.

© Bolton & Menk, Inc. 2017, All Rights Reserved

DWR 12/5/2017 11:25:22 AM

LSE JOB#: 17-223

LSEngineers
234 N. Main St.
LeSueur, MN 56058

I HEREBY CERTIFY THAT THIS PLAN, SPECIFICATION OR REPORT WAS PREPARED BY ME OR UNDER MY DIRECT SUPERVISION, AND THAT I AM A DULY LICENSED PROFESSIONAL ENGINEER UNDER THE LAWS OF THE STATE OF MINNESOTA

SIGNATURE: Will P. Lehnertz TYPED OR PRINTED NAME: William P Lehnertz

DATE: 12/4/17 LICENSE NO. 14965

BOLTON & MENK

www.bolton-menk.com

REV.	BY	DATE

CITY OF WINDOM, MINNESOTA

WASTEWATER TREATMENT FACILITY IMPROVEMENTS

ANAEROBIC BASIN
PLANS

SHEET 3.13

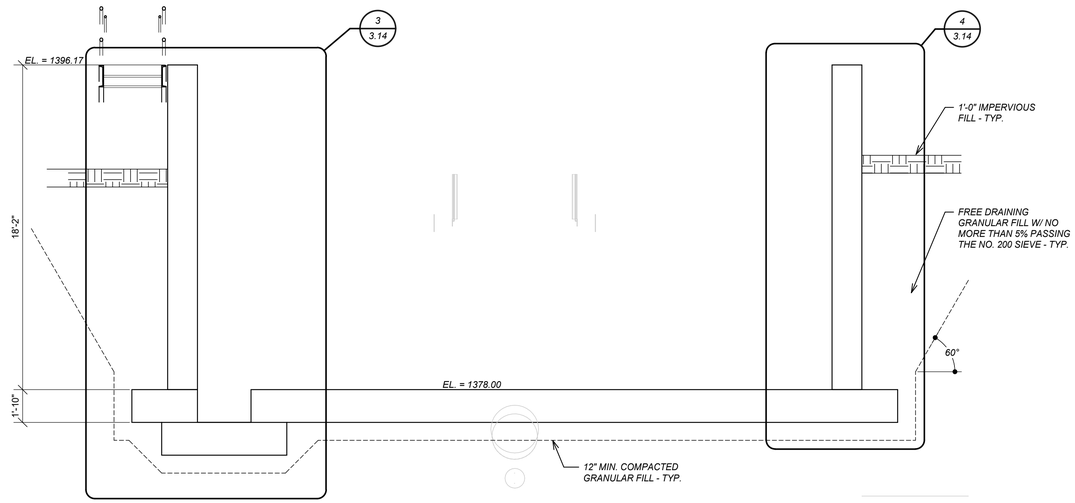

1 / 3.14 Section 35

1/4" = 1'-0"

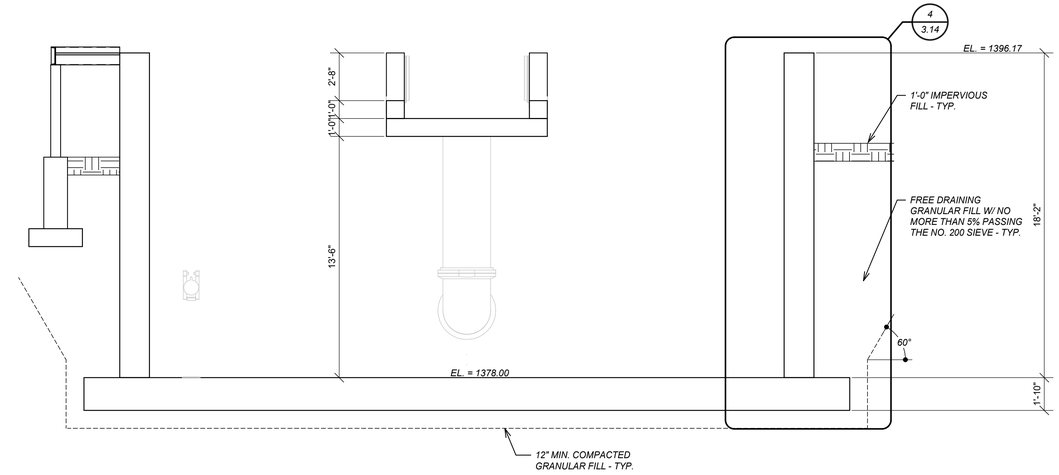

2 / 3.14 Section 36

1/4" = 1'-0"

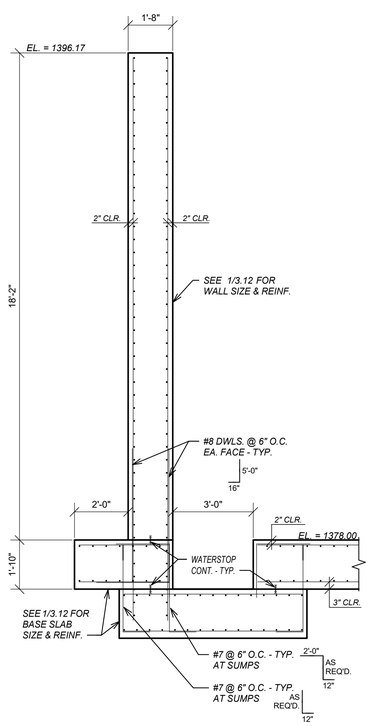

3 / 3.14 Section 35 - Callout 1

3/8" = 1'-0"

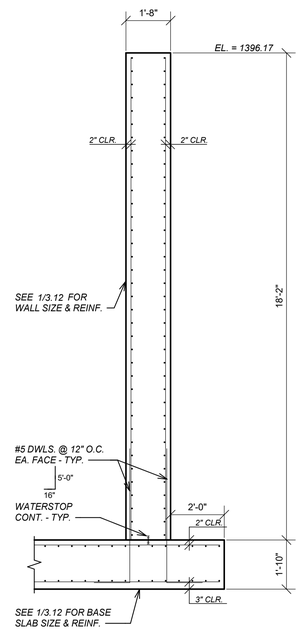

4 / 3.14 Section 35 - Callout 2

3/8" = 1'-0"

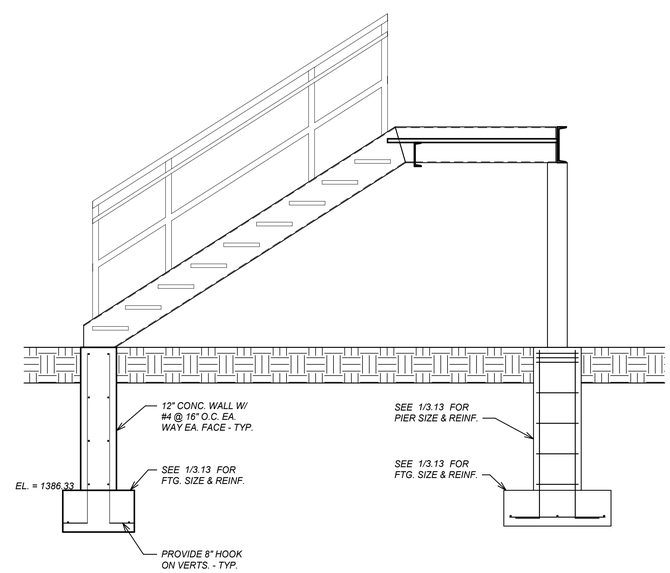

5 / 3.14 Section 38

1/2" = 1'-0"

SCALES SHOWN ON DRAWINGS ARE FOR 24"x36" SIZE SHEETS ONLY. DRAWINGS PLOTTED ON ANY OTHER SIZE SHEETS NEED TO HAVE SCALES ADJUSTED ACCORDINGLY.

© Bolton & Menk, Inc. 2017, All Rights Reserved

DWR 12/5/2017 11:25:40 AM

LSE JOB#: 17-223

LSEngineers
234 N. Main St.
LeSueur, MN 56058

I HEREBY CERTIFY THAT THIS PLAN, SPECIFICATION OR REPORT WAS PREPARED BY ME OR UNDER MY DIRECT SUPERVISION, AND THAT I AM A DULY LICENSED PROFESSIONAL ENGINEER UNDER THE LAWS OF THE STATE OF MINNESOTA.

SIGNATURE: Will P. Lehnertz TYPED OR PRINTED NAME: William P Lehnertz

DATE: 12/4/17 LICENSE NO. 14965

BOLTON & MENK

www.bolton-menk.com

REV.	BY	DATE

CITY OF WINDOM, MINNESOTA

WASTEWATER TREATMENT FACILITY IMPROVEMENTS

ANAEROBIC BASIN SECTIONS

SHEET 3.14

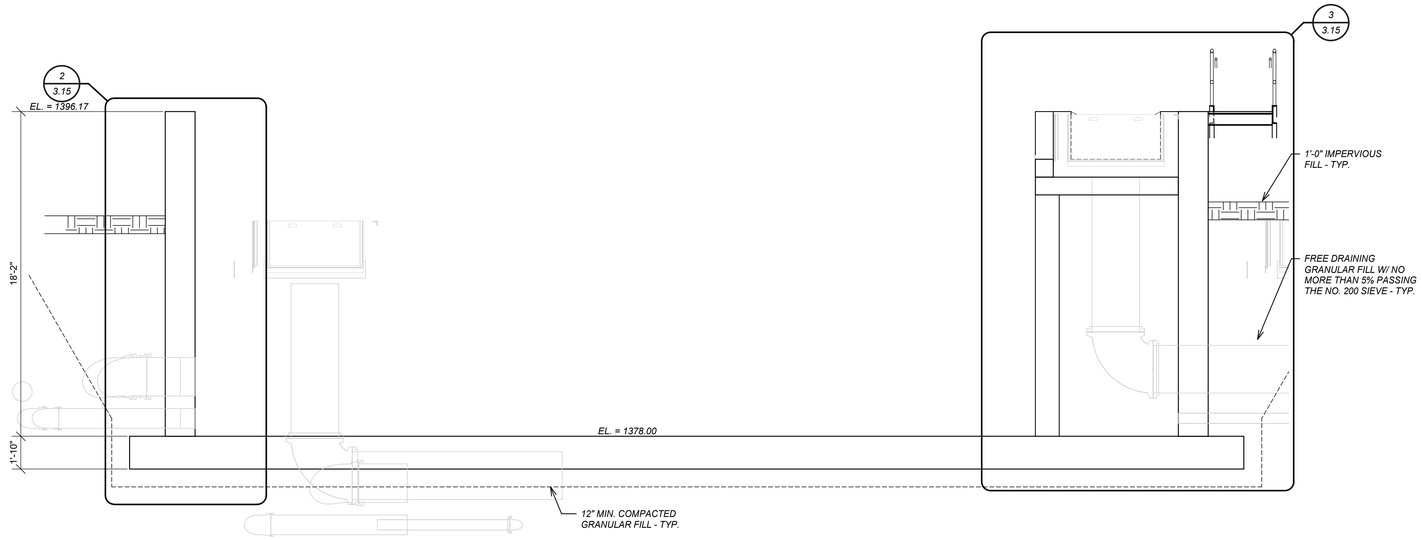

1 / 3.15 Section 37

1/4" = 1'-0"

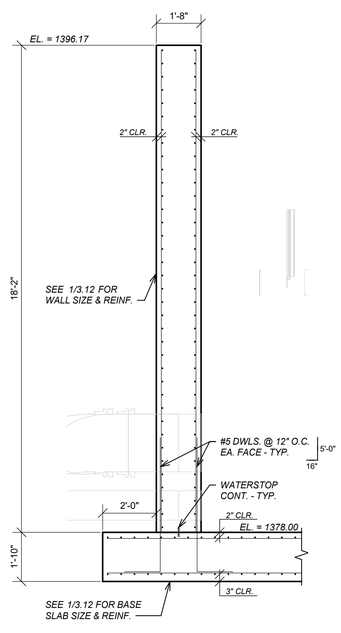

2 / 3.15 Section 37 - Callout 1

3/8" = 1'-0"

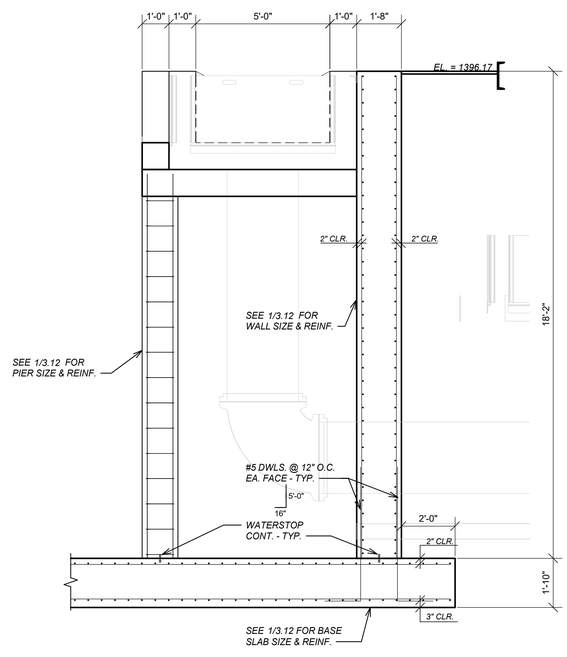

3 / 3.15 Section 37 - Callout 2

3/8" = 1'-0"

SCALES SHOWN ON DRAWINGS ARE FOR 24"x36" SIZE SHEETS ONLY. DRAWINGS PLOTTED ON ANY OTHER SIZE SHEETS NEED TO HAVE SCALES ADJUSTED ACCORDINGLY.

© Bolton & Menk, Inc. 2017, All Rights Reserved

DWR 12/5/2017 11:26:03 AM

LSE JOB#: 17-223

LSEngineers
234 N. Main St.
LeSueur, MN 56058

I HEREBY CERTIFY THAT THIS PLAN, SPECIFICATION OR REPORT WAS PREPARED BY ME OR UNDER MY DIRECT SUPERVISION, AND THAT I AM A DULY LICENSED PROFESSIONAL ENGINEER UNDER THE LAWS OF THE STATE OF MINNESOTA

SIGNATURE: Will P Lehnertz
TYPED OR PRINTED NAME: William P Lehnertz
DATE: 12/4/17
LICENSE NO. 14965

BOLTON & MENK

www.bolton-menk.com

REV.	BY	DATE

CITY OF WINDOM, MINNESOTA

WASTEWATER TREATMENT FACILITY IMPROVEMENTS

ANAEROBIC BASIN
SECTIONS

SHEET 3.15

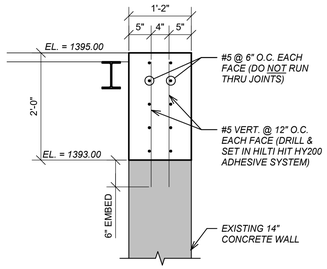

2 / 3.16 **Section 3**

3/4" = 1'-0"

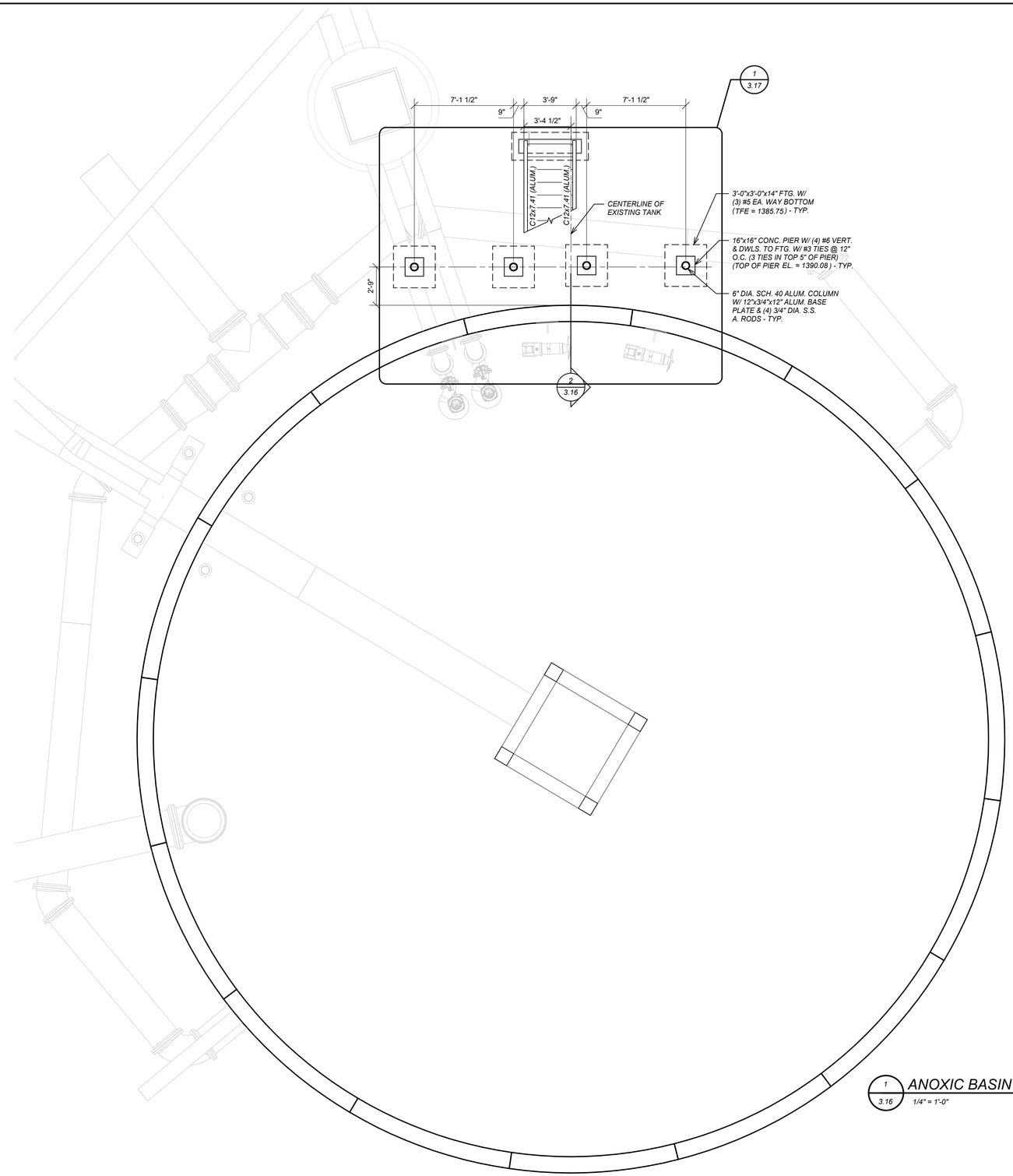

1 / 3.16 **ANOXIC BASIN (TOP OF WALL)**

1/4" = 1'-0"

SCALES SHOWN ON DRAWINGS ARE FOR 24"x36" SIZE SHEETS ONLY. DRAWINGS PLOTTED ON ANY OTHER SIZE SHEETS NEED TO HAVE SCALES ADJUSTED ACCORDINGLY.

© Bolton & Menk, Inc. 2017, All Rights Reserved

DWR 12/5/2017 11:26:15 AM

6" 1' 2' Graphic Scale for 3/4"=1'-0"

6" 1' 2' 4' 6' Graphic Scale for 1/4"=1'-0"

LSE JOB#: 17-223

LSEngineers
234 N. Main St.
LeSueur, MN 56058

I HEREBY CERTIFY THAT THIS PLAN, SPECIFICATION OR REPORT WAS PREPARED BY ME OR UNDER MY DIRECT SUPERVISION, AND THAT I AM A DULY LICENSED PROFESSIONAL ENGINEER UNDER THE LAWS OF THE STATE OF MINNESOTA

SIGNATURE: Will P Lehnertz TYPED OR PRINTED NAME: William P Lehnertz

DATE: 12/4/17 LICENSE NO. 14965

BOLTON & MENK

www.bolton-menk.com

REV.	BY	DATE
A	DWR	12-4-17

CITY OF WINDOM, MINNESOTA

WASTEWATER TREATMENT FACILITY IMPROVEMENTS

ANOXIC BASIN
PLANS & SECTIONS

SHEET 3.16

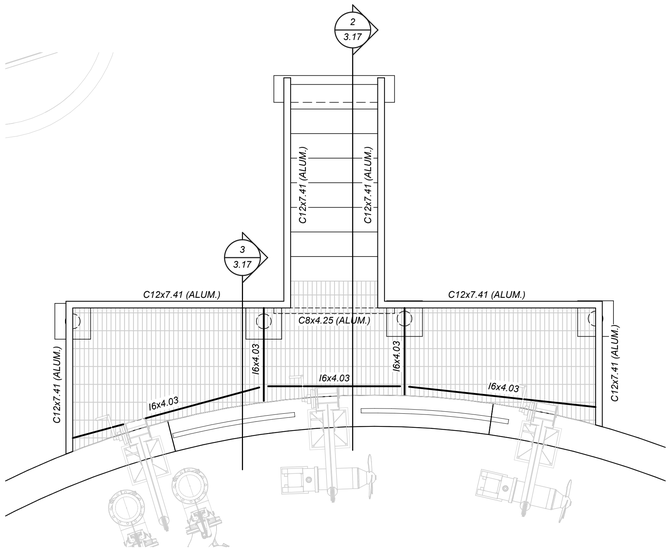

1 3.17 PLATFORM FRAMING PLAN

3/8" = 1'-0"

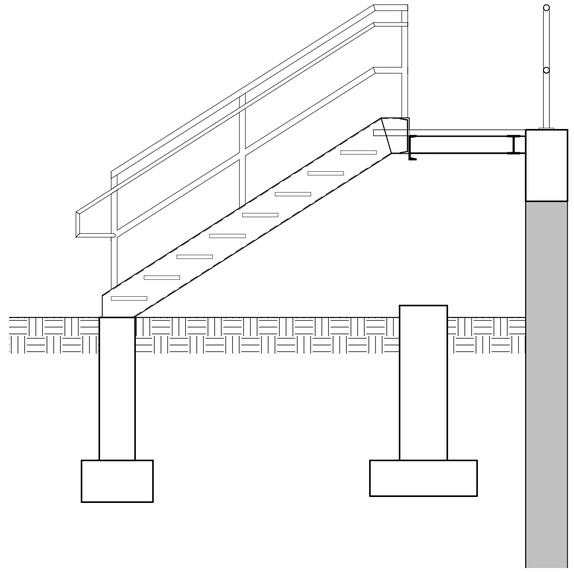

2 3.17 Section 43

1/2" = 1'-0"

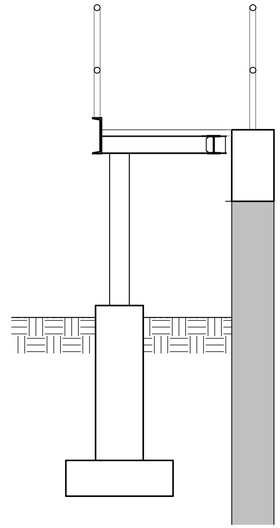

3 3.17 Section 44

1/2" = 1'-0"

SCALES SHOWN ON DRAWINGS ARE FOR 24"x36" SIZE SHEETS ONLY. DRAWINGS PLOTTED ON ANY OTHER SIZE SHEETS NEED TO HAVE SCALES ADJUSTED ACCORDINGLY.

© Bolton & Menk, Inc. 2017, All Rights Reserved

DWR 12/5/2017 11:26:30 AM

LSE JOB#: 17-223

LSEngineers
234 N. Main St.
LeSueur, MN 56058

I HEREBY CERTIFY THAT THIS PLAN, SPECIFICATION OR REPORT WAS PREPARED BY ME OR UNDER MY DIRECT SUPERVISION, AND THAT I AM A DULY LICENSED PROFESSIONAL ENGINEER UNDER THE LAWS OF THE STATE OF MINNESOTA

SIGNATURE: Will P. Lehnertz TYPED OR PRINTED NAME: William P Lehnertz

DATE: 12/4/17 LICENSE NO. 14965

BOLTON & MENK

www.bolton-menk.com

REV.	BY	DATE

CITY OF WINDOM, MINNESOTA

WASTEWATER TREATMENT FACILITY IMPROVEMENTS

ANOXIC BASIN
PLANS & SECTIONS

SHEET 3.17

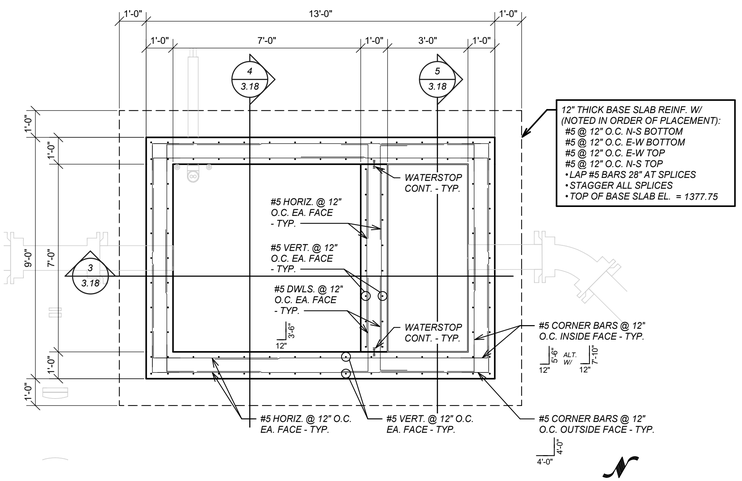

1 / 3.18 WALL PLAN

3/8" = 1'-0"

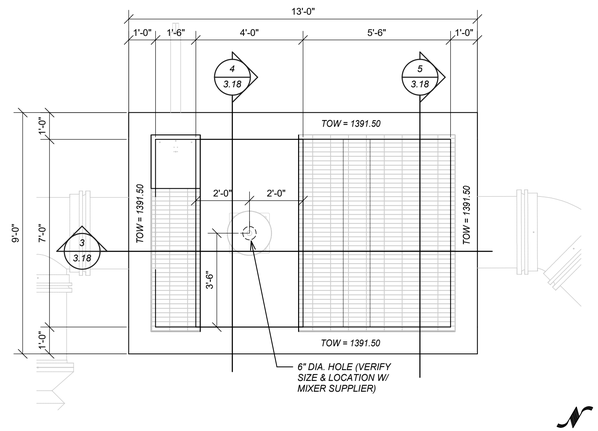

2 / 3.18 TOP OF WALL PLAN

3/8" = 1'-0"

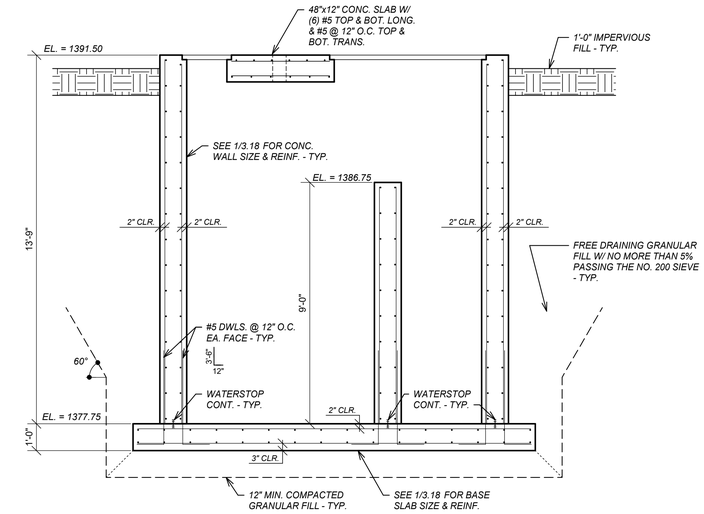

3 / 3.18 SECTION

3/8" = 1'-0"

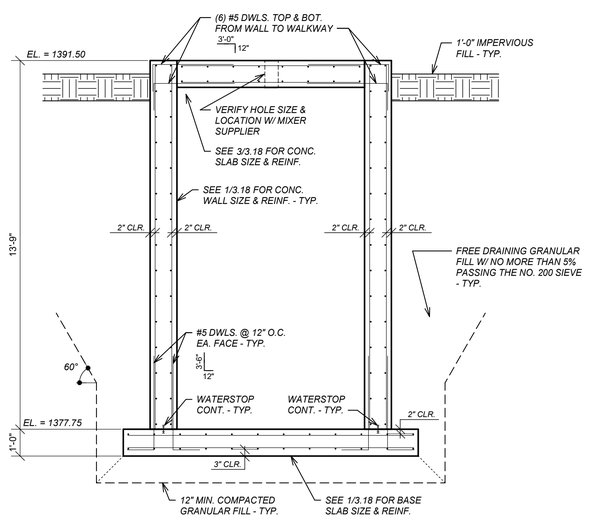

4 / 3.18 SECTION

3/8" = 1'-0"

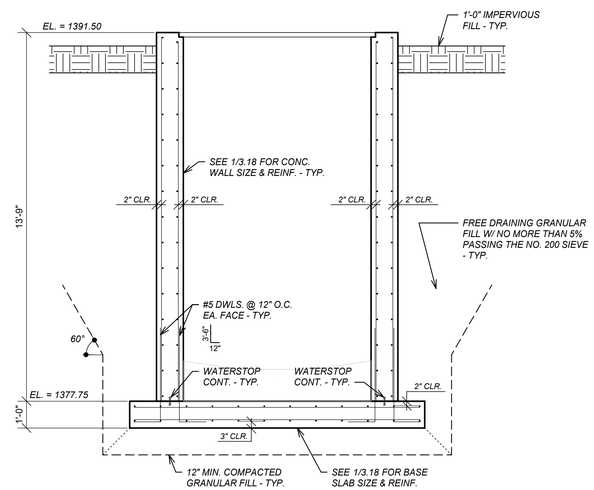

5 / 3.18 SECTION

3/8" = 1'-0"

SCALES SHOWN ON DRAWINGS ARE FOR 24"x36" SIZE SHEETS ONLY. DRAWINGS PLOTTED ON ANY OTHER SIZE SHEETS NEED TO HAVE SCALES ADJUSTED ACCORDINGLY.

© Bolton & Menk, Inc. 2017, All Rights Reserved

DWR 12/5/2017 11:27:02 AM

1' 2' 4'
Graphic Scale for 3/8"=1'-0"

LSE JOB#: 17-223

LSEngineers
234 N. Main St.
LeSueur, MN 56058

I HEREBY CERTIFY THAT THIS PLAN, SPECIFICATION OR REPORT WAS PREPARED BY ME OR UNDER MY DIRECT SUPERVISION, AND THAT I AM A DULY LICENSED PROFESSIONAL ENGINEER UNDER THE LAWS OF THE STATE OF MINNESOTA

SIGNATURE: Will P Lehnertz
TYPED OR PRINTED NAME: William P Lehnertz
DATE: 12/4/17
LICENSE NO. 14965

BOLTON & MENK
www.bolton-menk.com

REV.	BY	DATE

CITY OF WINDOM, MINNESOTA
WASTEWATER TREATMENT FACILITY IMPROVEMENTS
RAPID MIX STRUCTURE
PLANS & SECTIONS

SHEET 3.18

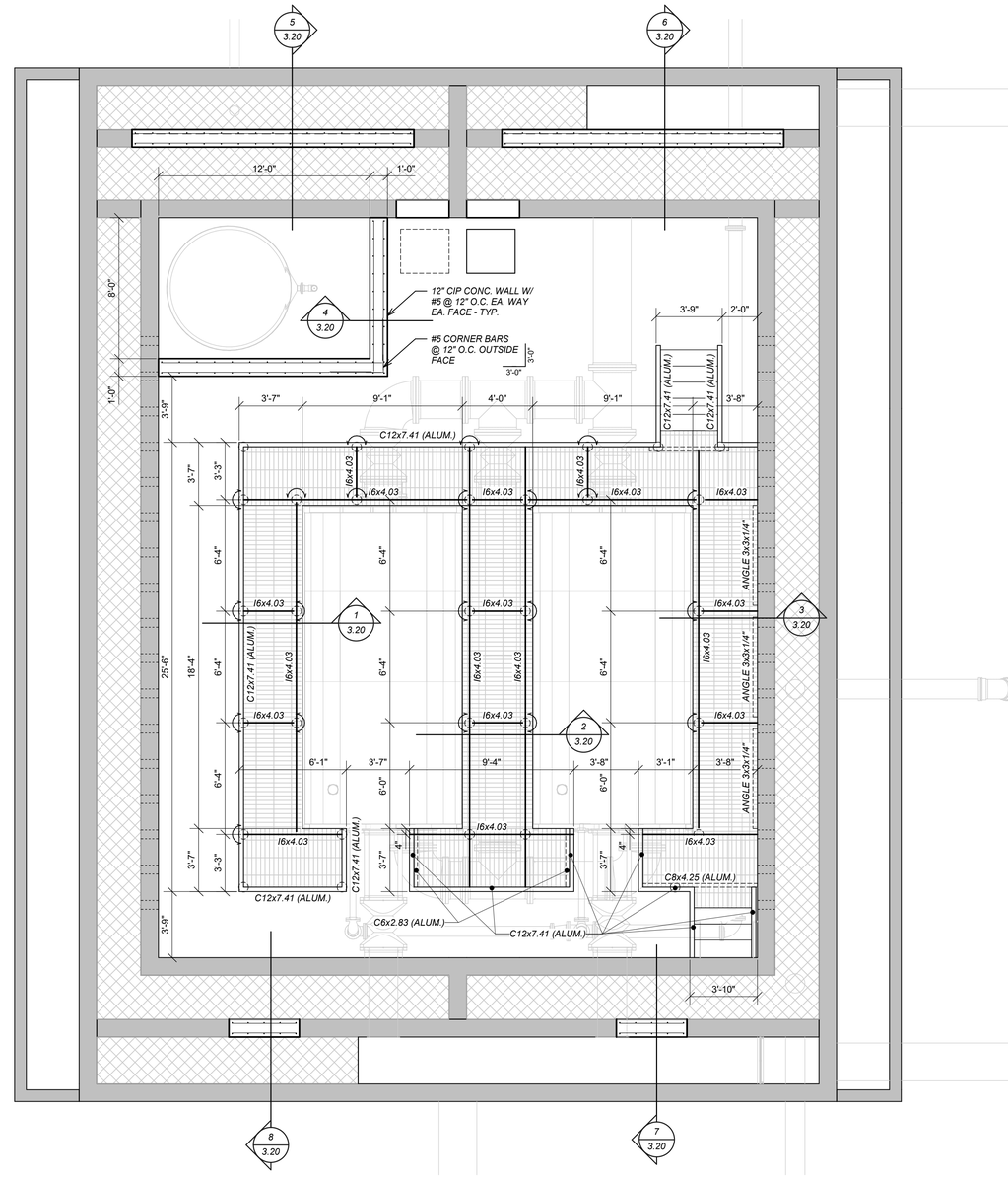

1 / 3.19 FRAMING PLAN

1/4" = 1'-0"

SCALES SHOWN ON DRAWINGS ARE FOR 24"x36" SIZE SHEETS ONLY. DRAWINGS PLOTTED ON ANY OTHER SIZE SHEETS NEED TO HAVE SCALES ADJUSTED ACCORDINGLY.

© Bolton & Menk, Inc. 2017, All Rights Reserved

DWR 12/5/2017 11:27:23 AM

LSE JOB#: 17-223

LSEngineers
234 N. Main St.
LeSueur, MN 56058

I HEREBY CERTIFY THAT THIS PLAN, SPECIFICATION OR REPORT WAS PREPARED BY ME OR UNDER MY DIRECT SUPERVISION, AND THAT I AM A DULY LICENSED PROFESSIONAL ENGINEER UNDER THE LAWS OF THE STATE OF MINNESOTA

SIGNATURE: Wil P. Lehnertz TYPED OR PRINTED NAME: William P Lehnertz

DATE: 12/4/17 LICENSE NO. 14965

BOLTON & MENK

www.bolton-menk.com

REV.	BY	DATE

CITY OF WINDOM, MINNESOTA

WASTEWATER TREATMENT FACILITY IMPROVEMENTS

FILTER BUILDING
PLAN

SHEET 3.19

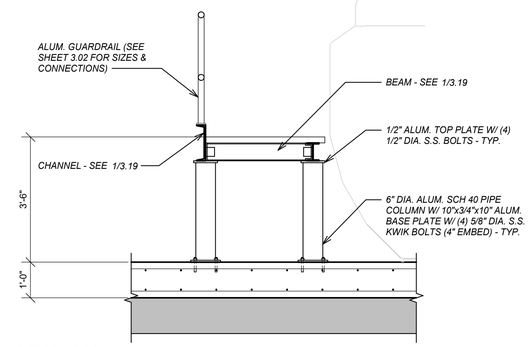

1 / 3.20 SECTION
1/2" = 1'-0"

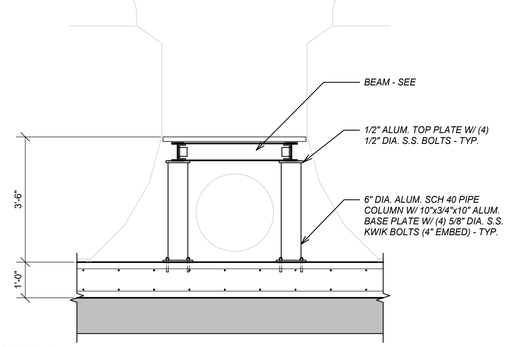

2 / 3.20 SECTION
1/2" = 1'-0"

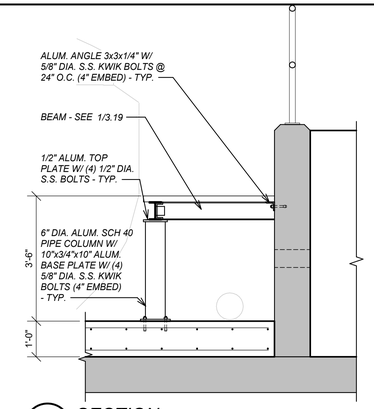

3 / 3.20 SECTION
1/2" = 1'-0"

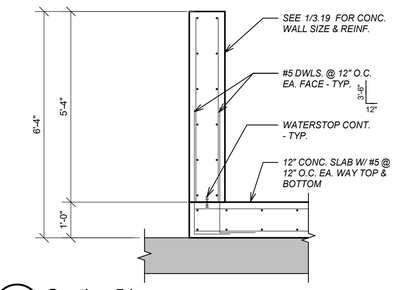

4 / 3.20 Section 51
1/2" = 1'-0"

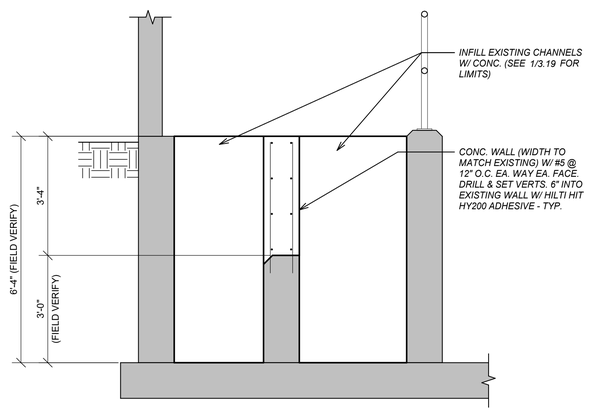

5 / 3.20 Section 52
1/2" = 1'-0"

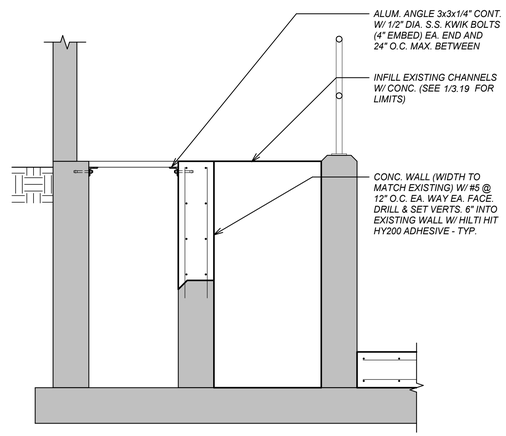

6 / 3.20 Section 53
1/2" = 1'-0"

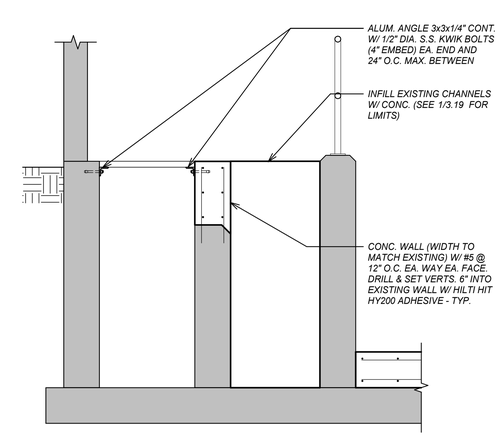

7 / 3.20 Section 54
1/2" = 1'-0"

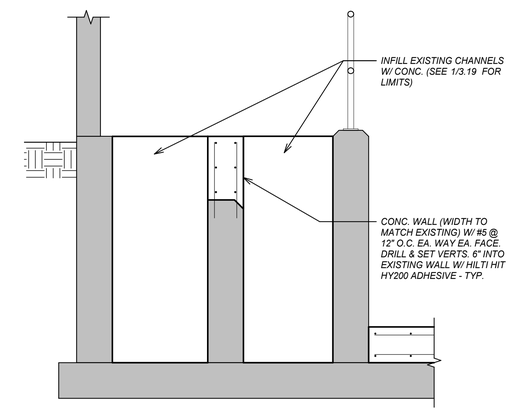

8 / 3.20 Section 55
1/2" = 1'-0"

SCALES SHOWN ON DRAWINGS ARE FOR 24"x36" SIZE SHEETS ONLY. DRAWINGS PLOTTED ON ANY OTHER SIZE SHEETS NEED TO HAVE SCALES ADJUSTED ACCORDINGLY.

© Bolton & Menk, Inc. 2017, All Rights Reserved
DWR 12/5/2017 11:27:48 AM

LSE JOB#: 17-223
LSEngineers
234 N. Main St.
LeSueur, MN 56058

I HEREBY CERTIFY THAT THIS PLAN, SPECIFICATION OR REPORT WAS PREPARED BY ME OR UNDER MY DIRECT SUPERVISION, AND THAT I AM A DULY LICENSED PROFESSIONAL ENGINEER UNDER THE LAWS OF THE STATE OF MINNESOTA

SIGNATURE: Will P Lehnertz TYPED OR PRINTED NAME: William P Lehnertz
DATE: 12/4/17 LICENSE NO. 14965

BOLTON & MENK
www.bolton-menk.com

REV.	BY	DATE
A	DWR	12-4-17

CITY OF WINDOM, MINNESOTA
WASTEWATER TREATMENT FACILITY IMPROVEMENTS
FILTER BUILDING
SECTIONS

SHEET 3.20

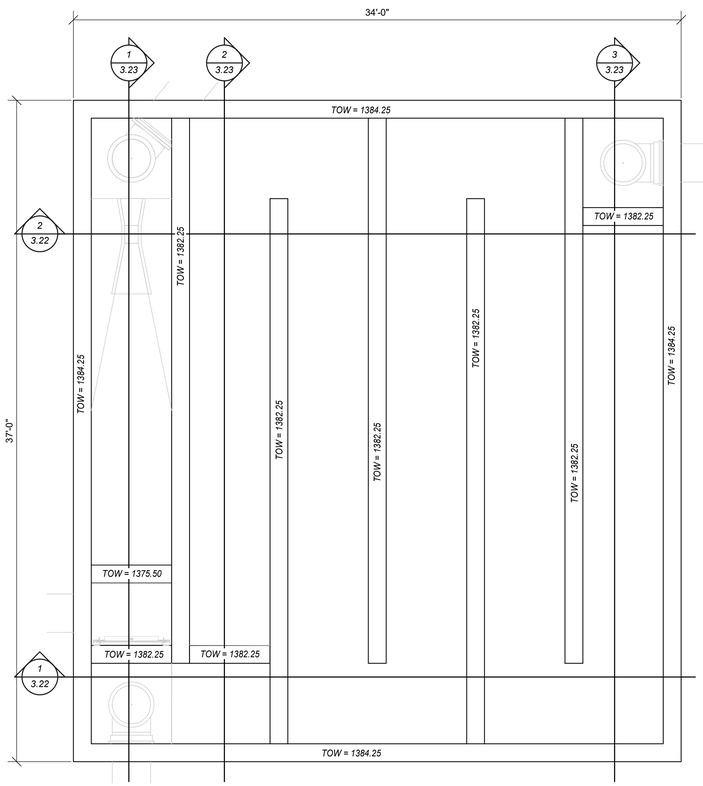

2 3.21 TOP OF WALL PLAN

1/4" = 1'-0"

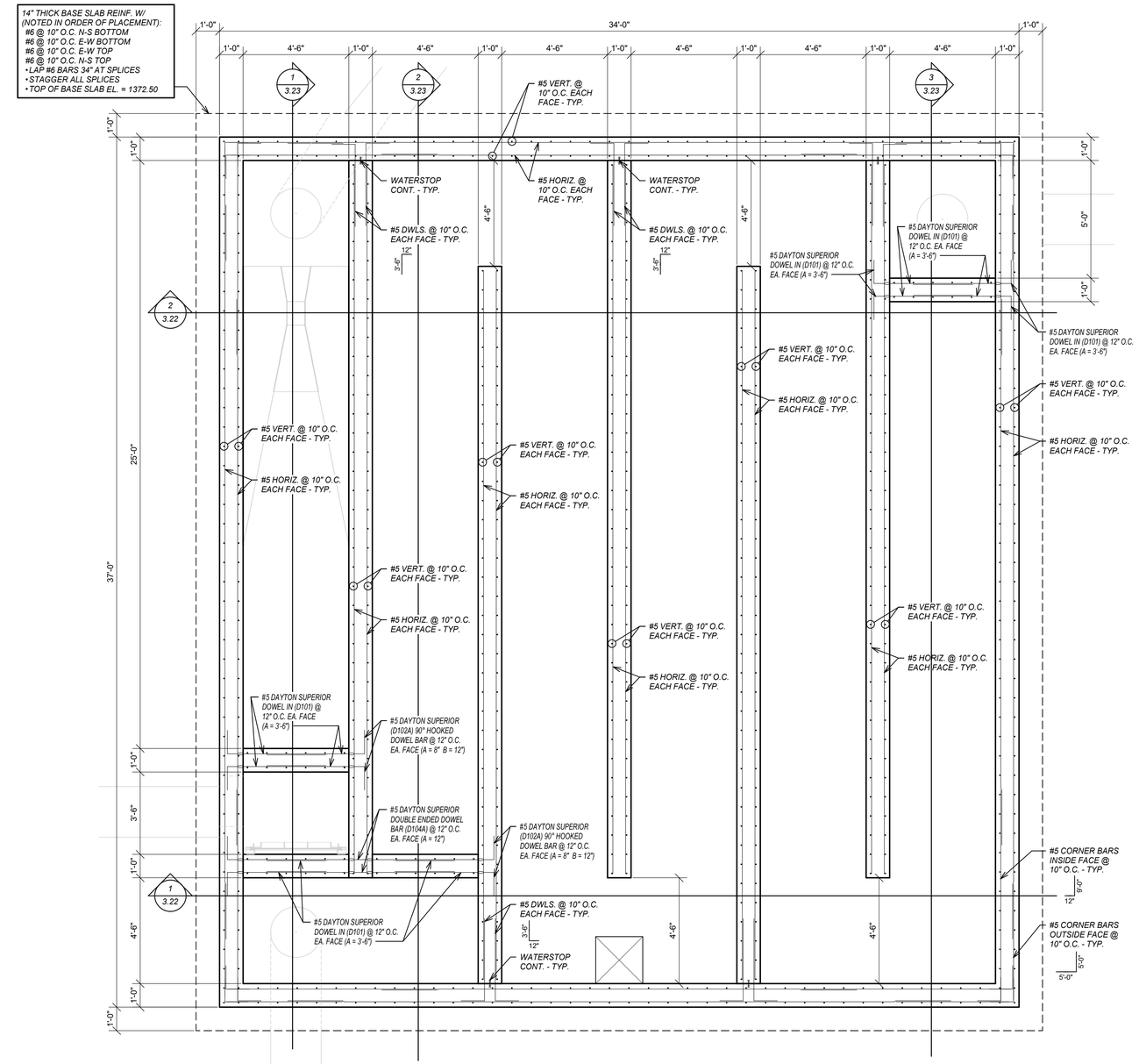

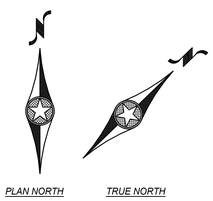

1 3.21 WALL PLAN

3/8" = 1'-0"

SCALES SHOWN ON DRAWINGS ARE FOR 24"x36" SIZE SHEETS ONLY. DRAWINGS PLOTTED ON ANY OTHER SIZE SHEETS NEED TO HAVE SCALES ADJUSTED ACCORDINGLY.

© Bolton & Menk, Inc. 2017, All Rights Reserved

DWR 12/5/2017 11:27:50 AM

LSE JOB#: 17-223

LSEngineers
234 N. Main St.
LeSueur, MN 56058

I HEREBY CERTIFY THAT THIS PLAN, SPECIFICATION OR REPORT WAS PREPARED BY ME OR UNDER MY DIRECT SUPERVISION, AND THAT I AM A DULY LICENSED PROFESSIONAL ENGINEER UNDER THE LAWS OF THE STATE OF MINNESOTA

SIGNATURE: Wm. P. Lehnertz TYPED OR PRINTED NAME: William P Lehnertz

DATE: 12/4/17 LICENSE NO. 14965

BOLTON & MENK

www.bolton-menk.com

REV.	BY	DATE
A	DWR	12-4-17

CITY OF WINDOM, MINNESOTA

WASTEWATER TREATMENT FACILITY IMPROVEMENTS

CHLORINE CONTACT BASIN PLANS

SHEET 3.21

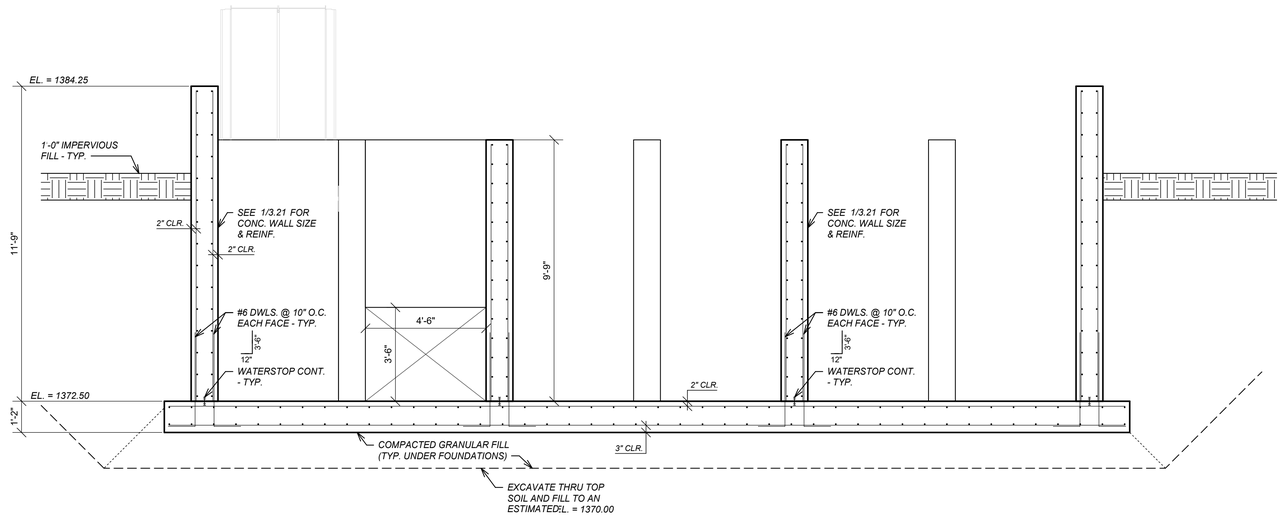

1 / 3.22 **Section 10**

3/8" = 1'-0"

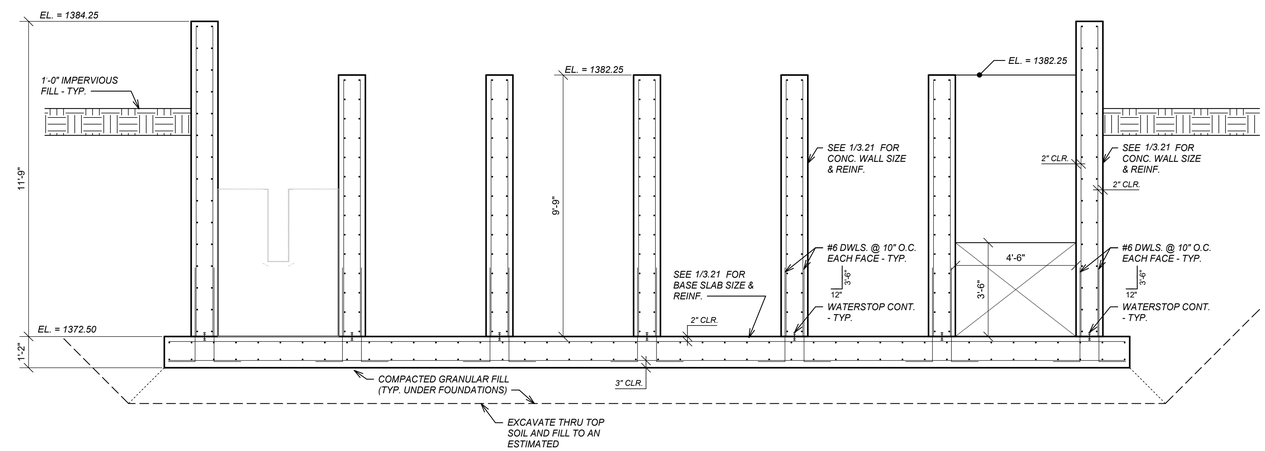

2 / 3.22 **Section 11**

3/8" = 1'-0"

SCALES SHOWN ON DRAWINGS ARE FOR 24"x36" SIZE SHEETS ONLY. DRAWINGS PLOTTED ON ANY OTHER SIZE SHEETS NEED TO HAVE SCALES ADJUSTED ACCORDINGLY.

© Bolton & Menk, Inc. 2017, All Rights Reserved

DWR 12/5/2017 11:27:51 AM

LSE JOB#: 17-223

LSEngineers
234 N. Main St.
LeSueur, MN 56058

I HEREBY CERTIFY THAT THIS PLAN, SPECIFICATION OR REPORT WAS PREPARED BY ME OR UNDER MY DIRECT SUPERVISION, AND THAT I AM A DULY LICENSED PROFESSIONAL ENGINEER UNDER THE LAWS OF THE STATE OF MINNESOTA

SIGNATURE: Will P. Lehnertz TYPED OR PRINTED NAME: William P Lehnertz

DATE: 12/4/17 LICENSE NO. 14965

BOLTON & MENK

www.bolton-menk.com

REV.	BY	DATE
A	DWR	12-4-17

CITY OF WINDOM, MINNESOTA

WASTEWATER TREATMENT FACILITY IMPROVEMENTS

CHLORINE CONTACT BASIN SECTIONS

SHEET 3.22

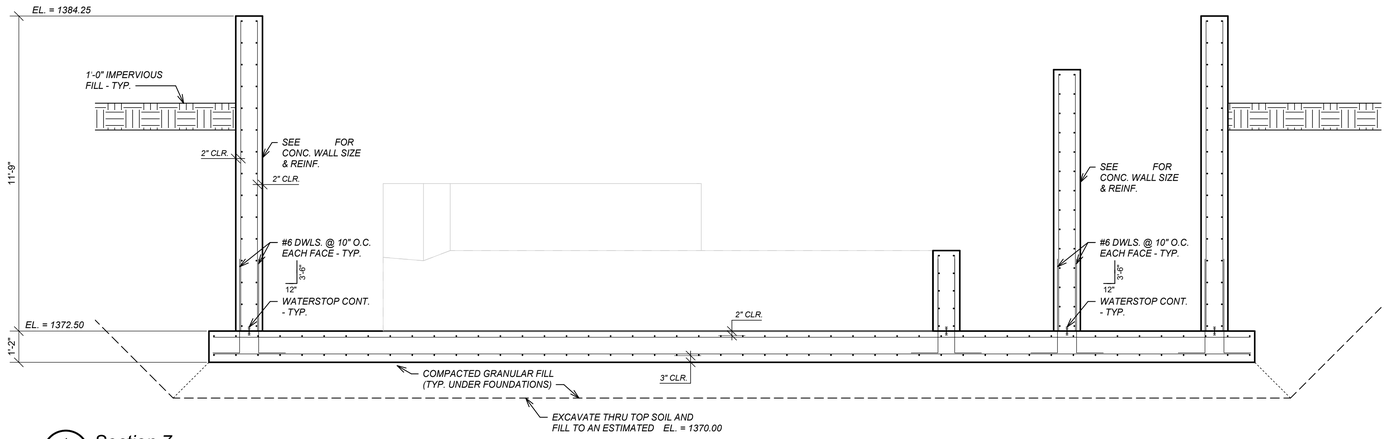

1 / 3.23 **Section 7**

3/8" = 1'-0"

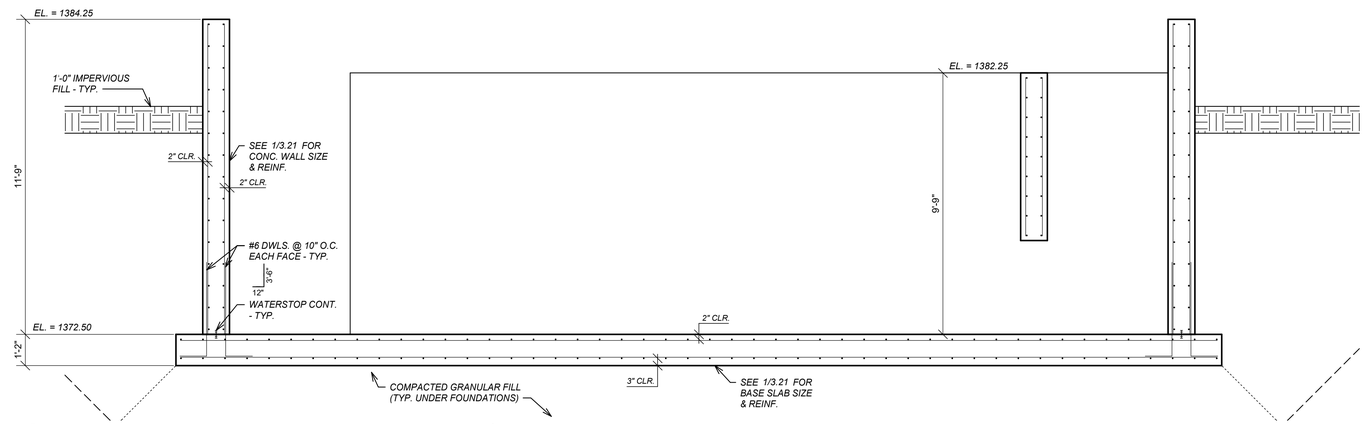

2 / 3.23 **Section 8**

3/8" = 1'-0"

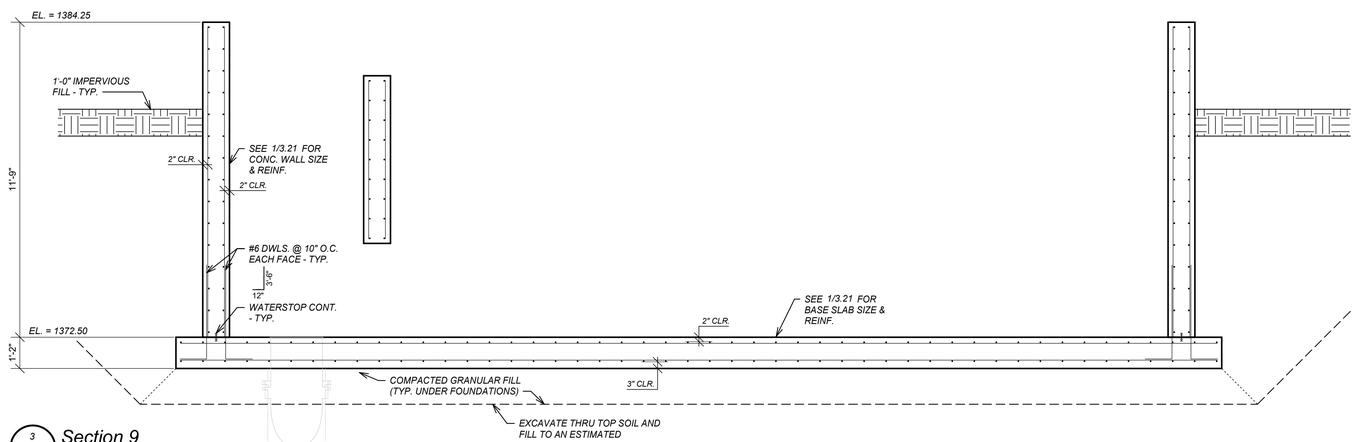

3 / 3.23 **Section 9**

3/8" = 1'-0"

SCALES SHOWN ON DRAWINGS ARE FOR 24"x36" SIZE SHEETS ONLY. DRAWINGS PLOTTED ON ANY OTHER SIZE SHEETS NEED TO HAVE SCALES ADJUSTED ACCORDINGLY.

© Bolton & Menk, Inc. 2017, All Rights Reserved

DWR 12/5/2017 11:27:52 AM

LSE JOB#: 17-223

LSEngineers
234 N. Main St.
LeSueur, MN 56058

I HEREBY CERTIFY THAT THIS PLAN, SPECIFICATION OR REPORT WAS PREPARED BY ME OR UNDER MY DIRECT SUPERVISION, AND THAT I AM A DULY LICENSED PROFESSIONAL ENGINEER UNDER THE LAWS OF THE STATE OF MINNESOTA

SIGNATURE: William P. Lehnertz TYPED OR PRINTED NAME: William P Lehnertz

DATE: 12/4/17 LICENSE NO. 14965

BOLTON & MENK

www.bolton-menk.com

REV.	BY	DATE
A	DWR	12-4-17

CITY OF WINDOM, MINNESOTA

WASTEWATER TREATMENT FACILITY IMPROVEMENTS

CHLORINE CONTACT BASIN SECTIONS

SHEET 3.23

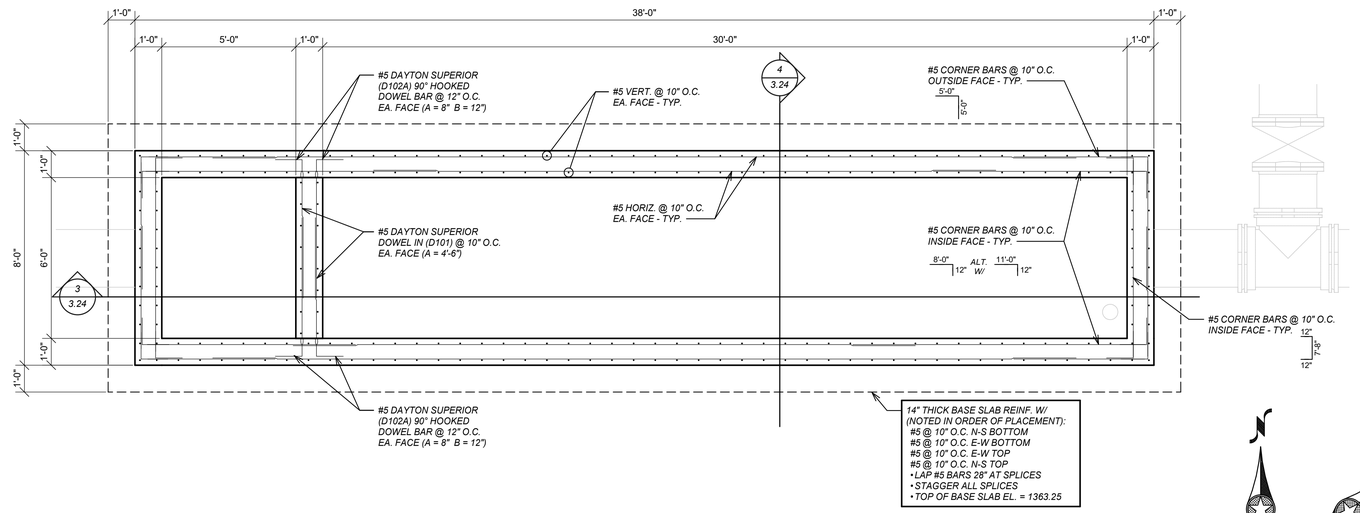

1 / 3.24 WALL PLAN

3/8" = 1'-0"

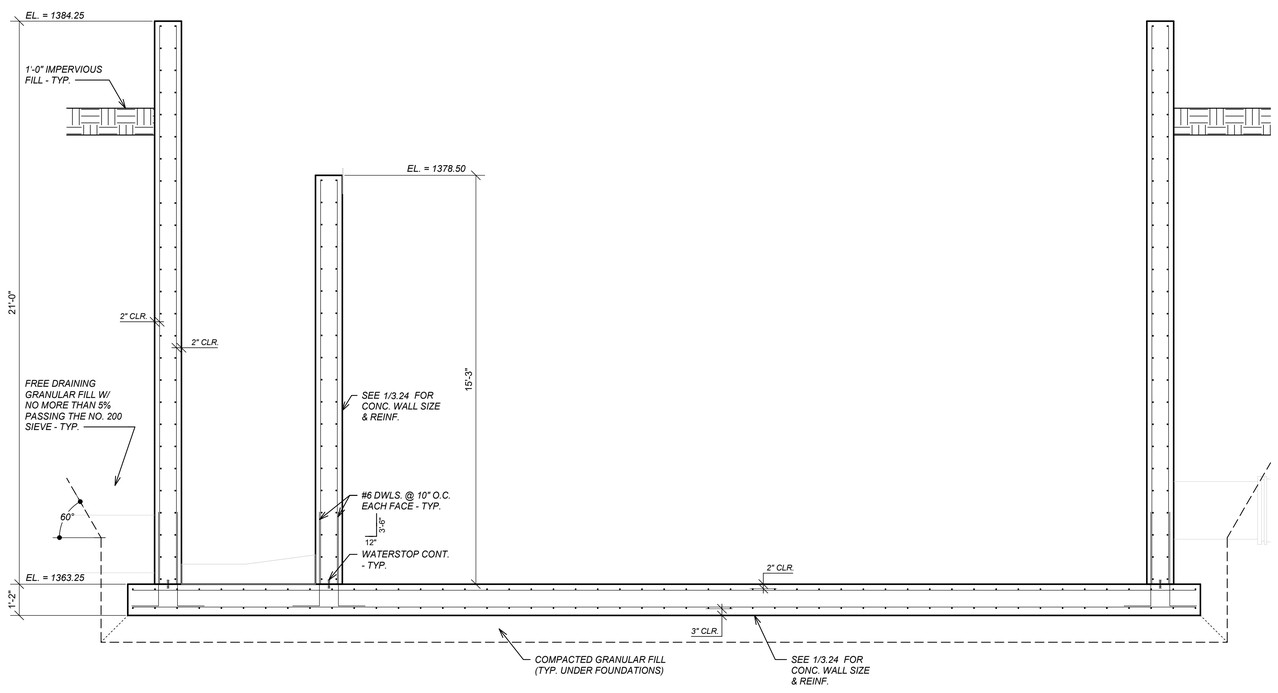

3 / 3.24 SECTION

3/8" = 1'-0"

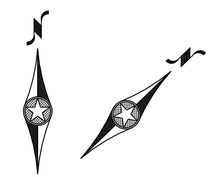

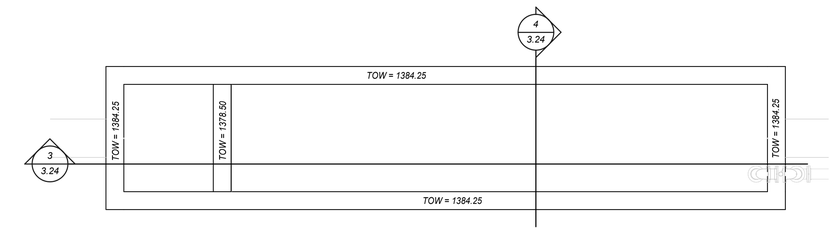

2 / 3.24 TOP OF WALL PLAN

1/4" = 1'-0"

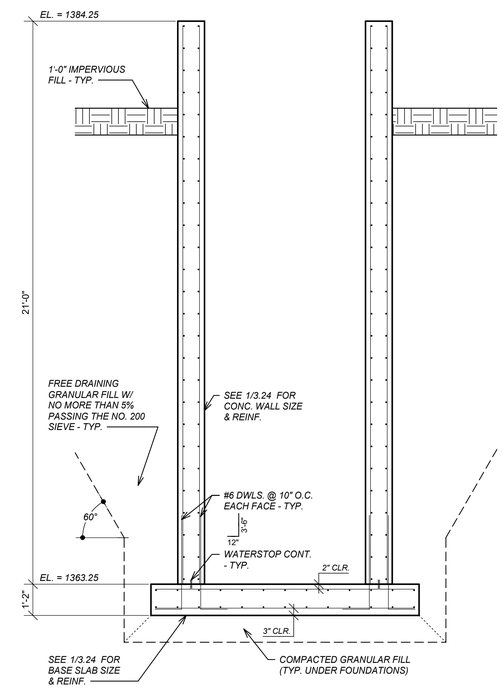

4 / 3.24 SECTION

3/8" = 1'-0"

SCALES SHOWN ON DRAWINGS ARE FOR 24"x36" SIZE SHEETS ONLY. DRAWINGS PLOTTED ON ANY OTHER SIZE SHEETS NEED TO HAVE SCALES ADJUSTED ACCORDINGLY.

© Bolton & Menk, Inc. 2017, All Rights Reserved

DWR 12/5/2017 11:28:24 AM

LSE JOB#: 17-223

LSEngineers
234 N. Main St.
LeSueur, MN 56058

I HEREBY CERTIFY THAT THIS PLAN, SPECIFICATION OR REPORT WAS PREPARED BY ME OR UNDER MY DIRECT SUPERVISION, AND THAT I AM A DULY LICENSED PROFESSIONAL ENGINEER UNDER THE LAWS OF THE STATE OF MINNESOTA

SIGNATURE: Wm. P. Lehnertz TYPED OR PRINTED NAME: William P Lehnertz

DATE: 12/4/17 LICENSE NO. 14965

BOLTON & MENK

www.bolton-menk.com

REV.	BY	DATE

CITY OF WINDOM, MINNESOTA

WASTEWATER TREATMENT FACILITY IMPROVEMENTS

POST AERATION BASIN
PLANS & SECTIONS

SHEET 3.24

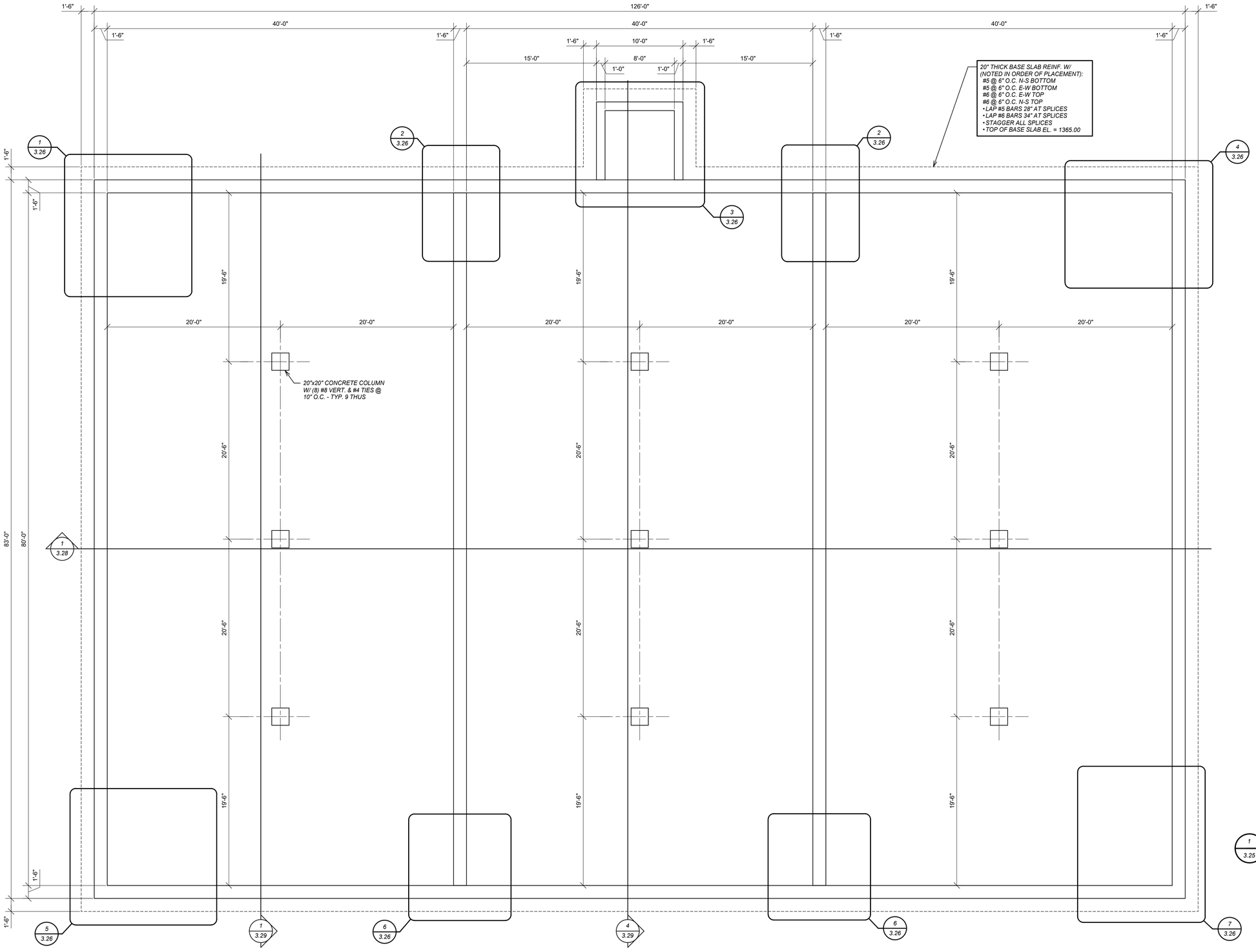

1 / 3.25 FOUNDATION PLAN

3/16" = 1'-0"

SCALES SHOWN ON DRAWINGS ARE FOR 24"x36" SIZE SHEETS ONLY. DRAWINGS PLOTTED ON ANY OTHER SIZE SHEETS NEED TO HAVE SCALES ADJUSTED ACCORDINGLY.

© Bolton & Menk, Inc. 2017, All Rights Reserved

DWR 12/5/2017 11:28:25 AM

LSE JOB#: 17-223

LSEngineers
234 N. Main St.
LeSueur, MN 56058

I HEREBY CERTIFY THAT THIS PLAN, SPECIFICATION OR REPORT WAS PREPARED BY ME OR UNDER MY DIRECT SUPERVISION, AND THAT I AM A DULY LICENSED PROFESSIONAL ENGINEER UNDER THE LAWS OF THE STATE OF MINNESOTA

SIGNATURE: Will P. Lehnertz TYPED OR PRINTED NAME: William P Lehnertz

DATE: 12/4/17 LICENSE NO. 14965

BOLTON & MENK

www.bolton-menk.com

REV.	BY	DATE
A	DWR	12-4-17

CITY OF WINDOM, MINNESOTA

WASTEWATER TREATMENT FACILITY IMPROVEMENTS

BIOSOLIDS STORAGE TANK
FOUNDATION PLAN

SHEET 3.25

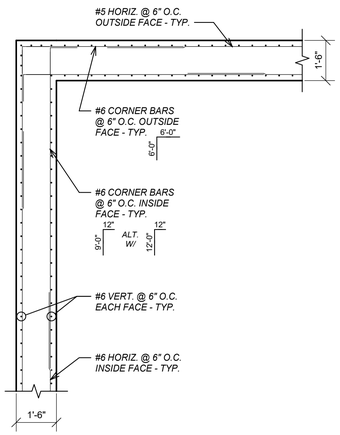

1 3.26 WALL PLAN
3/8" = 1'-0"

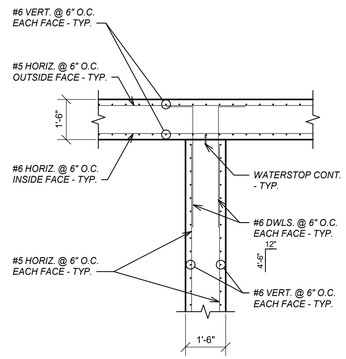

2 3.26 WALL PLAN
3/8" = 1'-0"

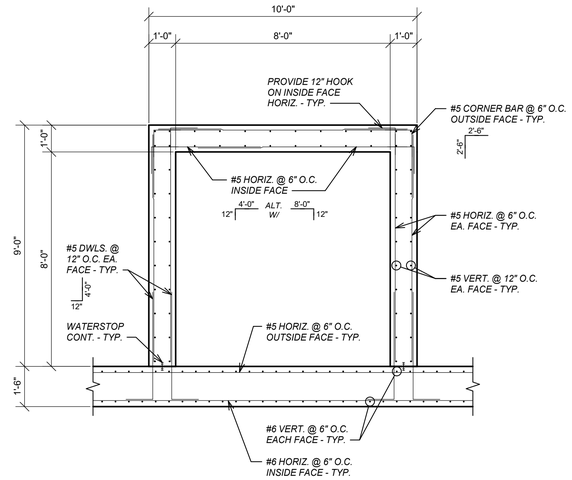

3 3.26 WALL PLAN
3/8" = 1'-0"

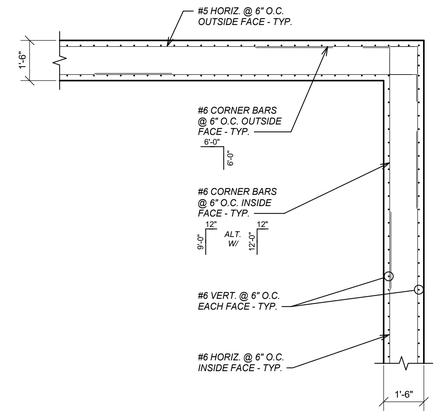

4 3.26 WALL PLAN
3/8" = 1'-0"

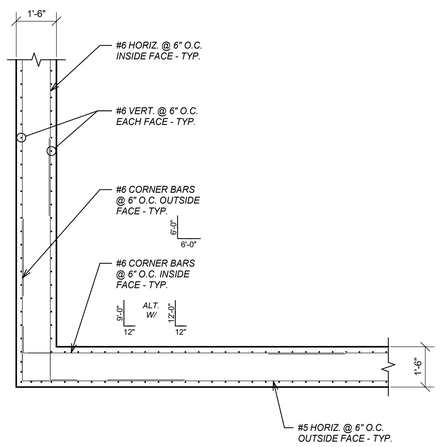

5 3.26 WALL PLAN
3/8" = 1'-0"

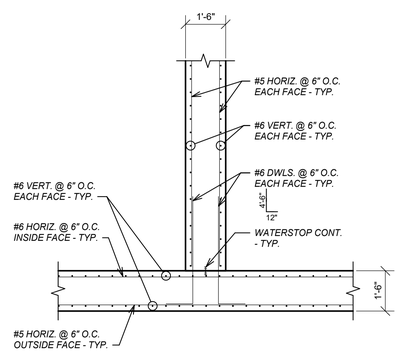

6 3.26 WALL PLAN
3/8" = 1'-0"

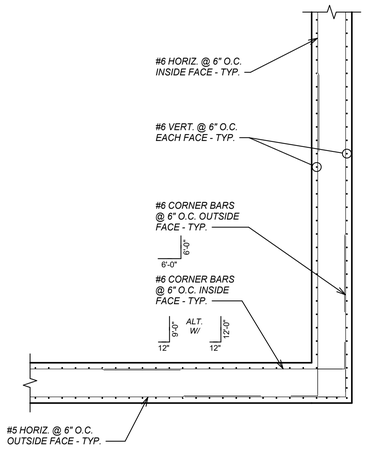

7 3.26 WALL PLAN
3/8" = 1'-0"

SCALES SHOWN ON DRAWINGS ARE FOR 24"x36" SIZE SHEETS ONLY. DRAWINGS PLOTTED ON ANY OTHER SIZE SHEETS NEED TO HAVE SCALES ADJUSTED ACCORDINGLY.

© Bolton & Menk, Inc. 2017, All Rights Reserved

DWR 12/5/2017 11:28:26 AM

LSE JOB#: 17-223

LSEngineers
234 N. Main St.
LeSueur, MN 56058

I HEREBY CERTIFY THAT THIS PLAN, SPECIFICATION OR REPORT WAS PREPARED BY ME OR UNDER MY DIRECT SUPERVISION, AND THAT I AM A DULY LICENSED PROFESSIONAL ENGINEER UNDER THE LAWS OF THE STATE OF MINNESOTA

SIGNATURE: Will P. Lehnertz TYPED OR PRINTED NAME: William P Lehnertz

DATE: 12/4/17 LICENSE NO. 14965

BOLTON & MENK

www.bolton-menk.com

REV.	BY	DATE
A	DWR	12-4-17

CITY OF WINDOM, MINNESOTA

WASTEWATER TREATMENT FACILITY IMPROVEMENTS

BIOSOLIDS STORAGE TANK
ENLARGED WALL PLANS

SHEET 3.26

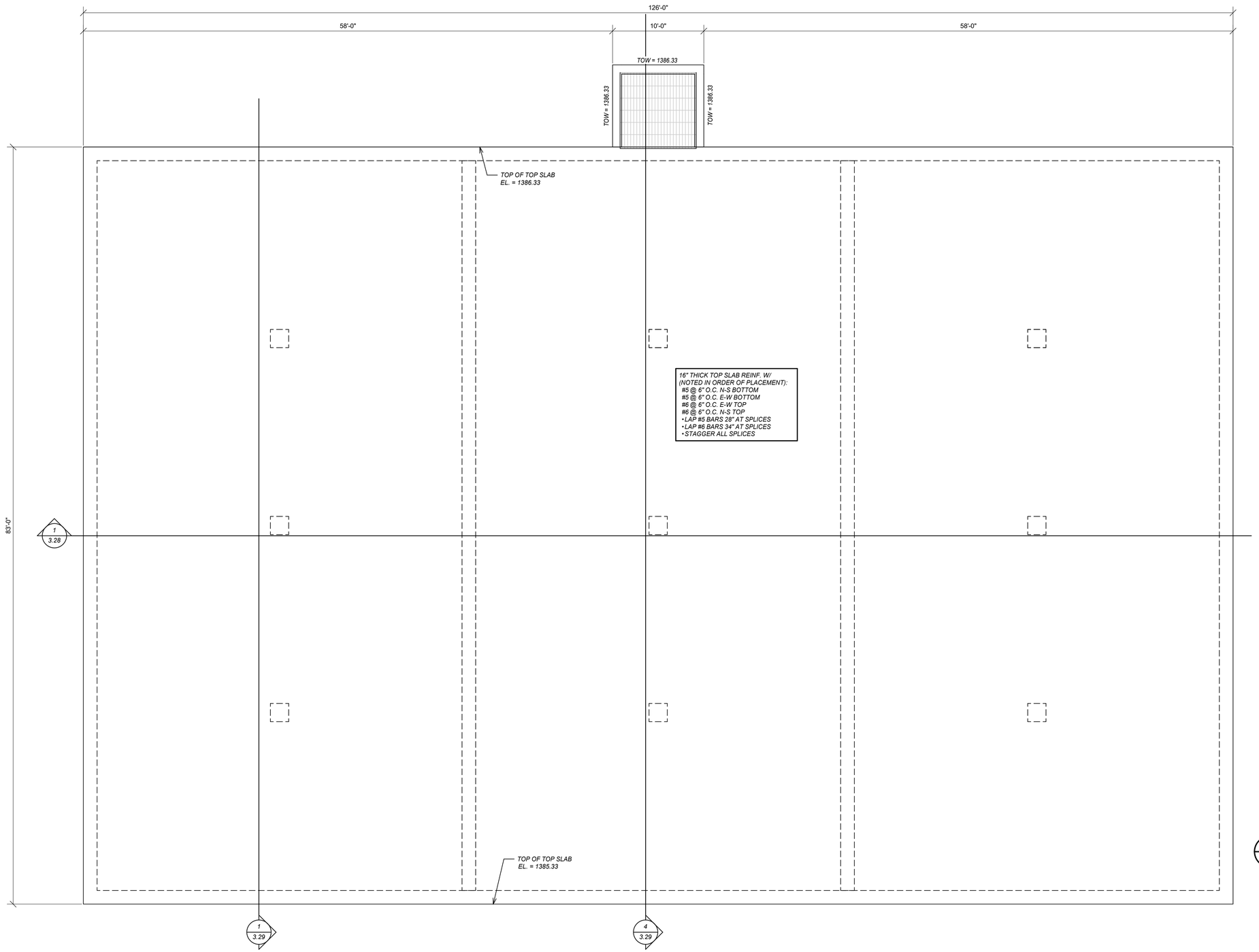

1 / 3.27 TOP SLAB PLAN

3/16" = 1'-0"

SCALES SHOWN ON DRAWINGS ARE FOR 24"x36" SIZE SHEETS ONLY. DRAWINGS PLOTTED ON ANY OTHER SIZE SHEETS NEED TO HAVE SCALES ADJUSTED ACCORDINGLY.

© Bolton & Menk, Inc. 2017, All Rights Reserved

DWR 12/5/2017 11:28:27 AM

LSE JOB#: 17-223

LSEngineers
234 N. Main St.
LeSueur, MN 56058

I HEREBY CERTIFY THAT THIS PLAN, SPECIFICATION OR REPORT WAS PREPARED BY ME OR UNDER MY DIRECT SUPERVISION, AND THAT I AM A DULY LICENSED PROFESSIONAL ENGINEER UNDER THE LAWS OF THE STATE OF MINNESOTA

SIGNATURE: Will P. Lehnertz TYPED OR PRINTED NAME: William P Lehnertz

DATE: 12/4/17 LICENSE NO. 14965

BOLTON & MENK

www.bolton-menk.com

REV.	BY	DATE
A	DWR	12-4-17

CITY OF WINDOM, MINNESOTA

WASTEWATER TREATMENT FACILITY IMPROVEMENTS

BIOSOLIDS STORAGE TANK
SECTIONS

SHEET 3.27

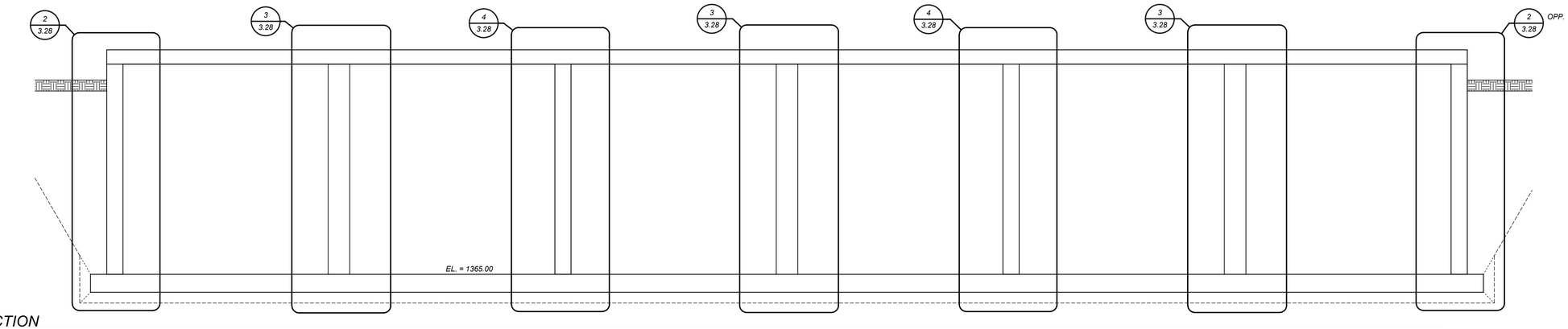

1 / 3.28 SECTION
3/16" = 1'-0"

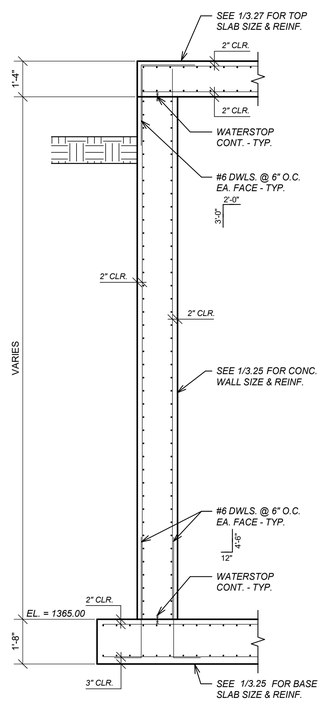

2 / 3.28 SECTION
3/8" = 1'-0"

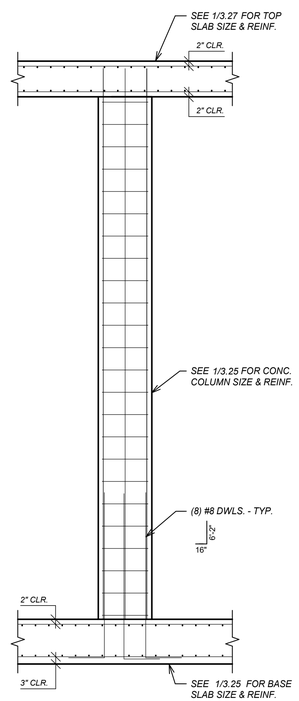

3 / 3.28 SECTION
3/8" = 1'-0"

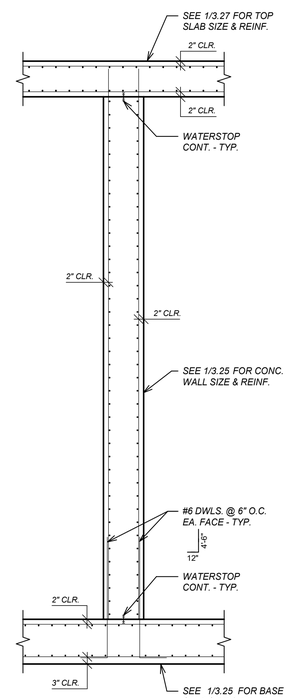

4 / 3.28 SECTION
3/8" = 1'-0"

SCALES SHOWN ON DRAWINGS ARE FOR 24"x36" SIZE SHEETS ONLY. DRAWINGS PLOTTED ON ANY OTHER SIZE SHEETS NEED TO HAVE SCALES ADJUSTED ACCORDINGLY.

© Bolton & Menk, Inc. 2017, All Rights Reserved
DWR 12/5/2017 11:28:28 AM

LSE JOB#: 17-223
LSEngineers
234 N. Main St.
LeSueur, MN 56058

I HEREBY CERTIFY THAT THIS PLAN, SPECIFICATION OR REPORT WAS PREPARED BY ME OR UNDER MY DIRECT SUPERVISION, AND THAT I AM A DULY LICENSED PROFESSIONAL ENGINEER UNDER THE LAWS OF THE STATE OF MINNESOTA

SIGNATURE: Will P. Lehnertz TYPED OR PRINTED NAME: William P Lehnertz
DATE: 12/4/17 LICENSE NO. 14965

BOLTON & MENK
www.bolton-menk.com

REV.	BY	DATE
A	DWR	12-4-17

CITY OF WINDOM, MINNESOTA
WASTEWATER TREATMENT FACILITY IMPROVEMENTS
BIOSOLIDS STORAGE TANK
SECTIONS

SHEET 3.28

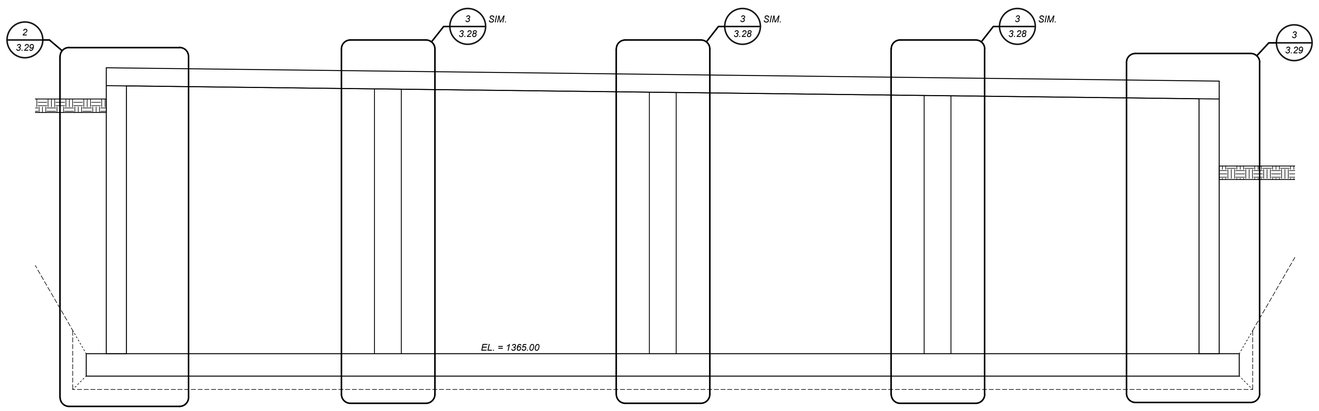

1 / 3.29 **Section 14**

3/16" = 1'-0"

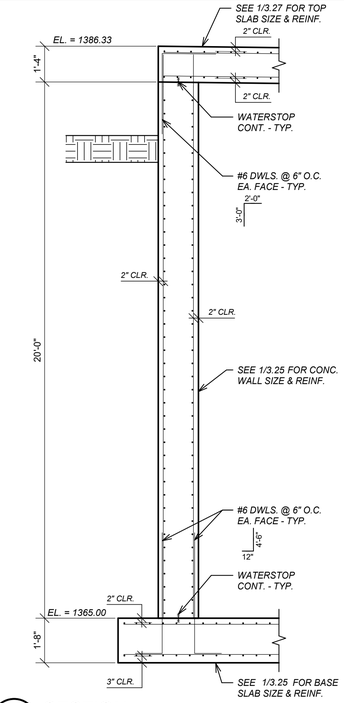

2 / 3.29 **SECTION**

3/8" = 1'-0"

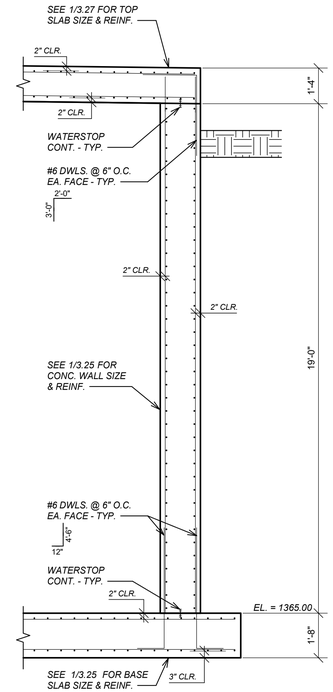

3 / 3.29 **SECTION**

3/8" = 1'-0"

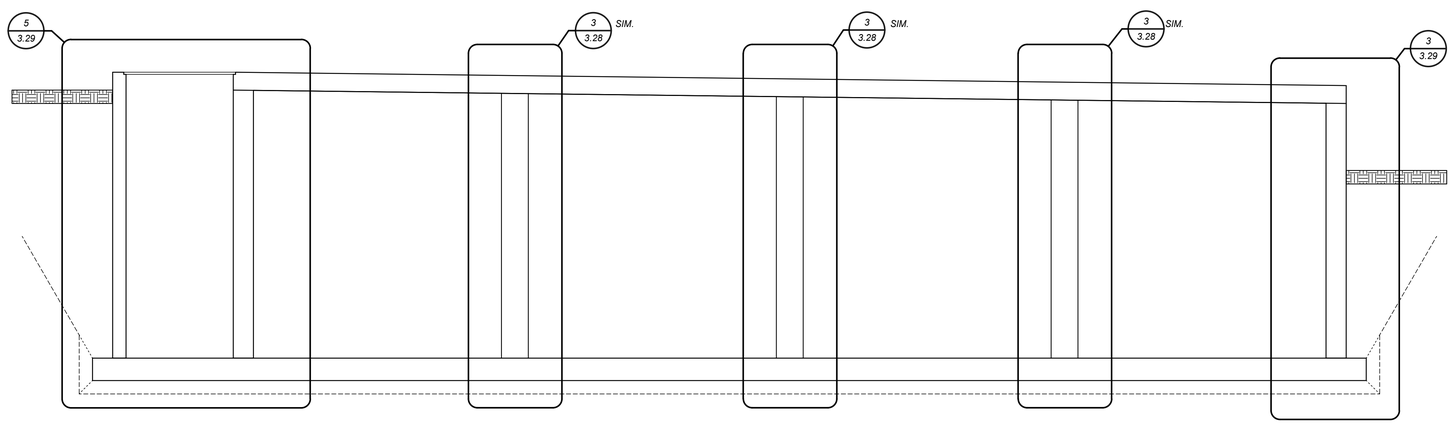

4 / 3.29 **Section 15**

3/16" = 1'-0"

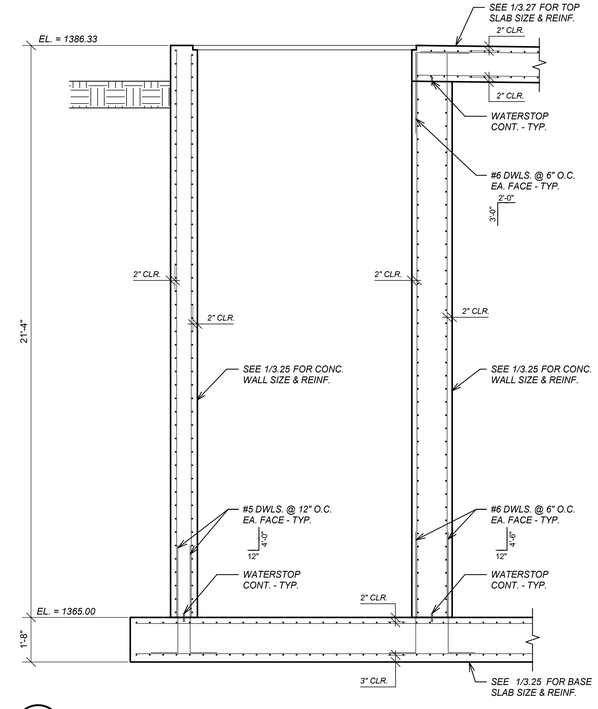

5 / 3.29 **SECTION**

3/8" = 1'-0"

SCALES SHOWN ON DRAWINGS ARE FOR 24"x36" SIZE SHEETS ONLY. DRAWINGS PLOTTED ON ANY OTHER SIZE SHEETS NEED TO HAVE SCALES ADJUSTED ACCORDINGLY.

© Bolton & Menk, Inc. 2017, All Rights Reserved

DWR 12/5/2017 11:28:28 AM

LSE JOB#: 17-223

LSEngineers
234 N. Main St.
LeSueur, MN 56058

I HEREBY CERTIFY THAT THIS PLAN, SPECIFICATION OR REPORT WAS PREPARED BY ME OR UNDER MY DIRECT SUPERVISION, AND THAT I AM A DULY LICENSED PROFESSIONAL ENGINEER UNDER THE LAWS OF THE STATE OF MINNESOTA

SIGNATURE: Will P. Lehnertz TYPED OR PRINTED NAME: William P Lehnertz

DATE: 12/4/17 LICENSE NO. 14965

BOLTON & MENK

www.bolton-menk.com

REV.	BY	DATE
A	DWR	12-4-17

CITY OF WINDOM, MINNESOTA

WASTEWATER TREATMENT FACILITY IMPROVEMENTS

BIOSOLIDS STORAGE TANK
SECTIONS

SHEET 3.29

ARCHITECTURAL ABBREVIATIONS

℄	CENTER LINE
∠	ANGLE
IL	PLATE
⌀	DIAMETER
°	DEGREES
@	AT
A.B.	ANCHOR BOLT
A.C.T.	ACOUSTIC CEILING TILE
A.F.F.	ABOVE FINISH FLOOR
ACC.	ACCESSIBLE
ADJ.	ADJACENT
ALUM.	ALUMINUM
APX.	APPROXIMATELY
B.O.	BOTTOM OF
BD.	BOARD
BLDG.	BUILDING
BLK.	BLOCK
BLKG.	BLOCKING
BOT.	BOTTOM
BTWN.	BETWEEN
C.B.	CATCH BASIN
C.J.	CONTROL JOINT
C.M.U.	CONCRETE MASONRY UNIT
C.T.	CERAMIC TILE
CAB.	CABINET
CARP.	CARPET
CLG.	CEILING
COL.	COLUMN
COMBO.	COMBINATION
CONC.	CONCRETE
CONST.	CONSTRUCTION
CONT.	CONTINUOUS
D.	DEPTH
D.L.O.	DAYLIGHT OPENING
D.S.	DOWNSPOUT
DBL.	DOUBLE
DIA.	DIAMETER
DIM	DIMENSION(S)
DISP.	DISPENSER
DN.	DOWN
DTL.	DETAIL
DWG.	DRAWING
E.I.F.S.	EXTERIOR INSULATION AND FINISH SYSTEM
E.J.	EXPANSION JOINT
EA.	EACH
ELEC.	ELECTRICAL
ELEV.	ELEVATION
EQ.	EQUAL
EST.	ESTIMATED
EXIST.	EXISTING
EXT.	EXTERIOR
F.E.	FIRE EXTINGUISHER
F.E. CAB.	FIRE EXTINGUISHER CABINET
F.O.M.	FACE OF MASONRY
F.O.S.	FACE OF STUD
F.O.S.F.	FACE OF STOREFRONT
F.O.W.	FACE OF WALL
F.R.P.	FIBERGLASS REINFORCED PANEL
F.T.	FIRE-RETARDANT TREATED
FIN.	FINISH
FLR.	FLOOR
FND.	FOUNDATION
FT.	FEET
FTG.	FOOTING
G.C.	GENERAL CONTRACTOR
GA.	GAUGE
GALV.	GALCANIZED
GYP.	GYPSUM
H.M.	HOLLOW METAL
H.V.A.C.	HEATING, VENTILATION & AIR CONDITIONING
HGT.	HEIGHT
HORIZ.	HORIZONTAL
I.D.	INSIDE DIAMETER
INSUL.	INSULATION
INV.	INVERT
L.H.	LEFT-HAND
L.H.R.	LEFT-HAND REVERSE
M.D.F.	MEDIUM DENSITY FIBERBOARD
M.O.	MASONRY OPENING
MANUF.	MANUFACTURER
MATL.	MATERIAL
MAX.	MAXIMUM
MECH.	MECHANICAL
MIN.	MINIMUM
MISC.	MISCELLANEOUS
MT.	MOUNT
MTL.	METAL
N.I.C.	NOT IN CONTRACT
N/A	NOT APPLICABLE
O.A.	OVERALL
O.C.	ON CENTER
O.D.	OUTSIDE DIAMETER
OPNG.	OPENING
OPP. HND.	OPPOSITE HAND
OVHD.	OVERHEAD
P. LAM.	PLASTIC LAMINATE
P.J.	PANEL JOINT
P.T.	PRESSURE TREATED
PED.	PEDESTAL
PLMBG.	PLUMBING
PLYWD.	PLYWOOD
PREFIN.	PREFINISH
Q.T.	QUARRY TILE
R.H.	RIGHT-HAND
R.H.R.	RIGHT-HAND REVERSE
R.O.	ROUGH OPENING
R.W.L.	RAINWATER LEADER
REINF.	REINFORCED
REQ'D.	REQUIRED
REV.	REVERSE
S.M.S.	SHEET METAL SCREW
S.S.	STAINLESS STEEL
SECT.	SECTION
SHT.	SHEET
SIM.	SIMILAR
SPEC.	SPECIFICATION
SPEC.	SPECIFICATION
SQ. FT.	SQUARE FEET
STD.	STANDARD
STL.	STEEL
STRUCT.	STRUCTURAL
SUSP.	SUSPENDED
SYS.	SYSTEM
T.O.	TOP OF
T.O.M.	TOP OF MASONRY
T.O.S.	TOP OF STEEL
T.P.	TOILET PAPER
T.S.	TUBE STEEL
TYP.	TYPICAL
U.N.O.	UNLESS NOTED OTHERWISE
V.C.T.	VINYL COMPOSITION TILE
V.I.F.	VERIFY IN FIELD
V.W.C.	VINYL WALL COVERING
VERT.	VERTICAL
W.	WIDTH
W.C.	WATER CLOSET
W.H.	WATER HEATER
W.S.	WATER SOFTENER
W.W.M.	WELDED WIRE MESH
W/	WITH
W/O	WITHOUT
WD.	WOOD

ARCHITECTURAL SYMBOLS LEGEND

- X — STRUCTURAL GRIDLINE MARKER
- 00 X0.0 — DETAIL BUBBLE & MARKER
- 00 X0.0 — ELEVATION MARKER
- 00 X0.0 — SECTION MARKER
- ELEMENT 000'-00" — SPOT ELEVATION
- Room Name 000 — ROOM NAME & NUMBER MARKER
- 00 — DOOR MARKER
- 00 — WINDOW MARKER
- 0 — REVISION NUMBER
- 00 — KEYED NOTE MARKER
- W0 — WALL TYPE MARKER
- ACCESSIBLE PATH OF TRAVEL INDICATOR OR MEANS OF EGRESS PATH INDICATOR

ARCHITECTURAL MATERIAL SYMBOLS LEGEND

- BATT INSULATION
- BRICK MASONRY
- CONCRETE MASONRY
- EARTH
- EXISTING CONSTRUCTION/ CONSTRUCTION BY OTHERS
- METAL
- PLYWOOD
- POURED CONCRETE
- RIGID INSULATION
- SAND/FILL MATERIAL(S)

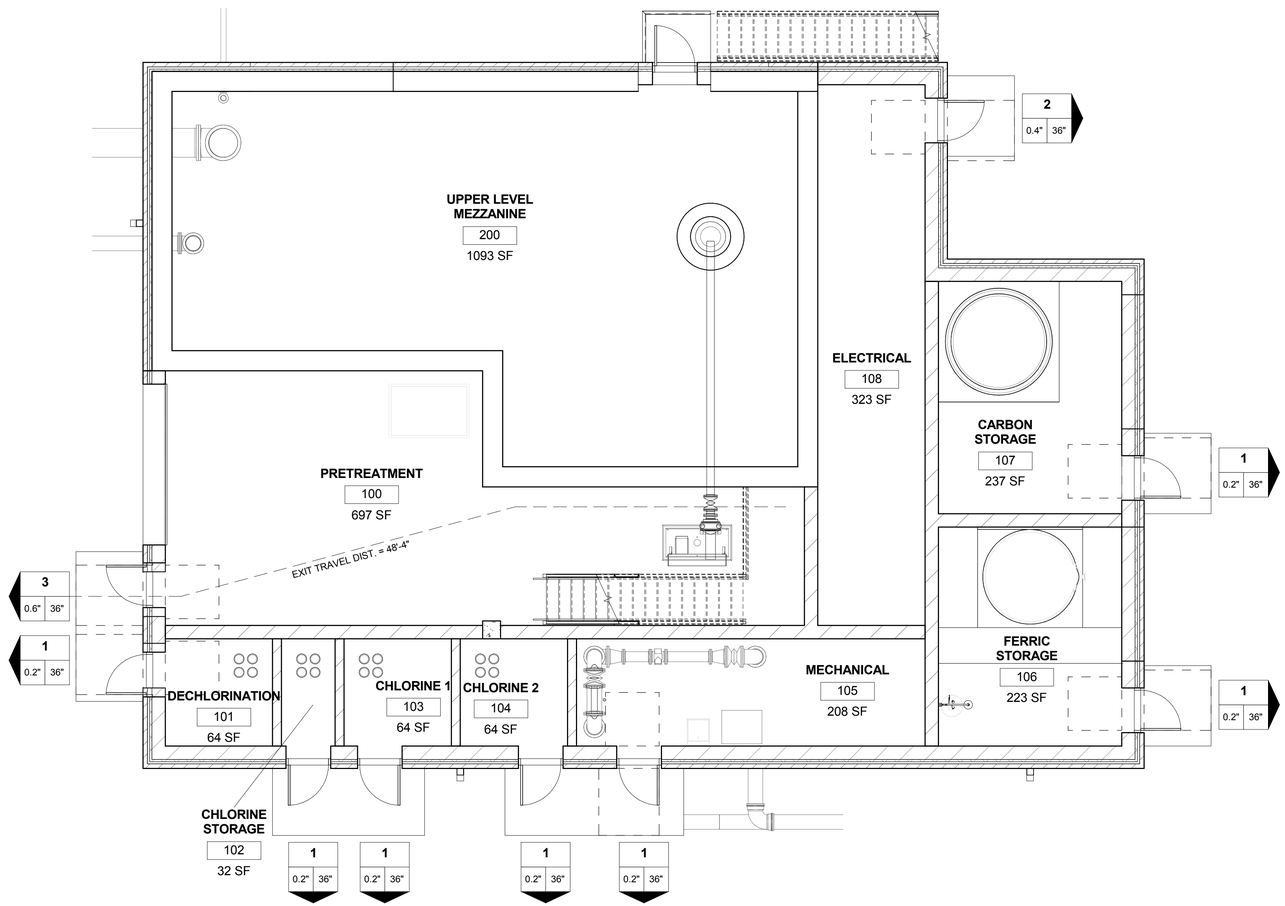

1 / 4.01 **LIFE-SAFETY PLAN**
3/16" = 1'-0"

CODE ANALYSIS

BUILDING CODE:	2015 MINNESOTA STATE BUILDING CODE
PLUMBING CODE:	2015 MINNESOTA STATE PLUMBING CODE, CHAPTER 4714
MECHANICAL CODE:	2015 MINNESOTA STATE MECHANICAL & FUEL GAS CODE
ELECTRICAL CODE:	2014 NATIONAL ELECTRIC CODE
FIRE PREVENTION CODE:	2015 MINNESOTA STATE FIRE CODE
ACCESSIBILITY CODE:	2015 MINNESOTA STATE ACCESSIBILITY CODE
ENERGY CODE:	2015 MINNESOTA STATE ENERGY CODE WITH A.S.H.R.A.E.
LIFE-SAFETY CODE:	2015 N.F.P.A. 101 LIFE-SAFETY CODE

A.) USE & OCCUPANCY CLASSIFICATION:
- Group: F-2

B.) GENERAL BUILDING HEIGHTS & AREAS:
- Building Area: 3,718 SF
- Construction Type: VB
- Proposed Use(s): F-2
- Most Restrictive Use: F-2
- Allowable Height: 1 STORIES
- Allowable Area: 13,000 SF MAX. PER STORY
- Full Building Automatic Fire Sprinkler System: No

C.) TYPES OF CONSTRUCTION:
- Required Fire-Resistive Ratings:

BUILDING ELEMENT	RATING
Structural Frame	0
Bearing Walls - Exterior	0
Bearing Walls - Interior	0
Nonbearing Walls - Exterior	0
Nonbearing Walls - Interior	0
Floor Construction	0
Roof Construction	0
Occupancy Separation Between <Group> & <Group>	0

D.) INTERIOR FINISHES:
- Required Interior Wall & Ceiling Finish Classifications:

TYPE OF SPACE	FINISH CLASSIFICATION
Exit Enclosures & Exit Passageways	C
Corridors	C
Rooms & Enclosed Spaces	C

E.) MEANS OF EGRESS:
- Minimum Number Of Exits Required = <2> Exits
- Minimum Exit Width Required: < 0'-0" >
- Minimum Width For Other Egress Components = <2.6">
- Maximum Exit Travel Distance Allowed = 200'-0"
- Occupant Load Calculations:

FUNCTION OF SPACE	AREA	AREA PER OCC.	OCC. LOAD
Factory	3,718 s.f.	300 s.f.	13
		TOTAL OCCUPANT LOAD:	**13**

F.) PLUMBING FIXTURE REQUIREMENTS:

**No toilet facility provided per MN Building Code, Chapter 29, Section 2902.1, Exception*

GENERAL NOTES

1. ALL WORK SHALL BE COMPLETED IN ACCORDANCE WITH FEDERAL, STATE AND LOCAL CODE ORDINANCES AND LAWS

2. THE CONTRACTOR SHALL VISIT THE JOB SITE, VERIFY EXISTING CONDITIONS, AND NOTIFY THE ARCHITECT OF ANY DISCREPANCIES PRIOR TO SUBMITTING A BID AND/ OR BEGINNING ANY CONSTRUCTION WORK.

3. ALL WORK, WHEN COMPLETED, SHALL CONFORM TO THE AMERICANS WITH DISABILITIES ACT ACCESSIBILITY GUIDELINES.

4. THE CONTRACTOR SHALL NOTIFY THE ARCHITECT OF ANY DISCREPANCIES FOUND BETWEEN THE DRAWINGS AND SPECIFICATIONS FOR RESOLUTION.

5. THE CONTRACTOR SHALL BE RESPONSIBLE FOR MAINTAINING A COMPLETE AS-BUILT SET OF CONSTRUCTION DRAWINGS AT THE JOB SITE AND TURNING THE AS-BUILT DRAWINGS OVER TO THE OWNER UPON COMPLETION OF THE PROJECT.

6. REFER TO INDIVIDUAL DRAWINGS WITHIN THIS SET OF CONSTRUCTION DOCUMENTS FOR ADDITIONAL GENERAL NOTES.

7. THE CONTRACTOR SHALL BE RESPONSIBLE FOR THOROUGHLY CLEANING THE COMPLETED JOB SITE PRIOR TO TURNING THE PROPERTY OVER TO THE OWNER FOR OCCUPANCY.

8. IN THE EVENT THAT THE CONTRACTOR, OR SUBCONTRACTOR AT ANY TIER, DETERMINES THAT SOME PORTION OF THE DRAWINGS, SPECIFICATIONS, OR OTHER CONTRACT DOCUMENTS REQUIRED CLARIFICATION OR INTERPRETATION BY THE ARCHITECT, THE CONTRACTOR SHALL SUBMIT A REQUEST FOR ADDITIONAL INFORMATION IN WRITING TO THE PROJECT ENGINEER.

REQUESTS FOR INFORMATION MAY ONLY ME BADE BY THE GENERAL CONTRACTOR. THE CONTRACTOR SHALL CLEARLY AND CONCISELY SET FORTH THE ISSUE FOR WHICH CLARIFICATION IS SOUGHT AND WHY A RESPONSE IS NEEDED FROM THE PROJECT ENGINEER AND/ OR CONSULTANTS. IN THE REQUEST FOR INFORMATION, THE CONTRACTOR SHALL SET FORTH AN UNDERSTANDING OF THE REQUIREMENT, ALONG WITH A REASON WHY SUCH AN UNDERSTANDING WAS REACHED. THE PROJECT ENGINEER WILL REVIEW THE REQUEST FOR INFORMATION TO DETERMINE IF IT IS A REQUEST FOR INFORMATION WITHIN THE MEANING OF THIS TERM. IF THE PROJECT ENGINEER DETERMINES THAT IT IS NOT A REQUEST FOR INFORMATION, IT WILL BE RETURNED TO THE CONTRACTOR, REVIEWED AS TO CONTENT, FOR RE-SUBMITTAL IN THE PROPER FORM AND THE PROPER MANNER.

RESPONSES TO REQUESTS FOR INFORMATION SHALL BE ISSUED UPON RECEIPT, BUT NO LATER THAN FIVE WORKING DAYS OF RECEIPT OF THE REQUEST, UNLESS THE PROJECT ENGINEER DETERMINES THAT A LONGER PERIOD OF TIME IS NEEDED IN ORDER TO PROVIDE AN ADEQUATE RESPONSE. IF A LONGER PERIOD OF TIME IS DETERMINED NECESSARY BY THE PROJECT ENGINEER, THE ARCHITECT WILL, WITHIN FIVE WORKING DAYS OF THE RECEIPT OF THE REQUEST FOR INFORMATION, NOTIFY THE CONTRACTOR OF THE ANTICIPATED RESPONSE TIME.

IF THE CONTRACTOR SUBMITS A REQUEST FOR INFORMATION WITH FIVE WORKING DAYS OR LESS FLOAT ON THE CURRENT PROJECT SCHEDULE, THE CONTRACTOR SHALL NOT BE ENTITLED TO ANY TIME EXTENSION DUE TO THE TIME IT TAKES THE PROJECT ENGINEER TO RESPOND TO THE REQUEST FOR INFORMATION, PROVIDED A RESPONSE IS GIVEN WITHIN FIVE WORKINGS DAYS AS SET FORTH ABOVE.

RESPONSES FROM THE PROJECT ENGINEER WILL NOT CHANGE ANY REQUIREMENTS OF THE CONTRACT DOCUMENTS. IN THE EVENT THAT THE CONTRACTOR BELIEVES A RESPONSE TO A REQUEST FOR INFORMATION WILL CAUSE A CHANGE TO REQUIREMENTS OF THE CONTRACT DOCUMENTS, THE CONTRACTOR SHALL IMMEDIATELY GIVE WRITTEN NOTICE TO THE PROJECT ENGINEER AND THE OWNER STATING THAT THE CONTRACTOR CONSIDERS THE RESPONSE TO BE A CHANGE ORDER. FAILURE TO GIVE SUCH WRITTEN NOTICE IMMEDIATELY SHALL WAIVE THE CONTRACTOR'S RIGHT TO SEEK ADDITIONAL TIME OR COST.

SCALES SHOWN ON DRAWINGS ARE FOR 24"X36" SIZE SHEETS ONLY. DRAWINGS PLOTTED ON ANY OTHER SIZE SHEETS NEED TO HAVE SCALES ADJUSTED ACCORDINGLY

© COPYRIGHT BOLTON & MENK, INC. 2016, ALL RIGHTS RESERVED
WILKUS ARCHITECTS, P.A. PROJECT NUMBER: 2017-0826

WILKUS ARCHITECTS
15 Ninth Avenue North
Hopkins, MN 55343
Phone: 952 941 8660
www.wilkusarch.com

I HEREBY CERTIFY THAT THIS PLAN, SPECIFICATION, OR REPORT WAS PREPARED BY ME OR UNDER MY DIRECT SUPERVISION AND THAT I AM A DULY LICENSED ARCHITECT UNDER THE LAWS OF THE STATE OF MINNESOTA.

SIGNATURE: TYPED OR PRINTED NAME: Jeffrey M. Rapp
DATE: 12/06/2017 LICENSE NO.: 22274 EXP. DATE: 06/30/2018

BOLTON & MENK
www.bolton-menk.com

REV.	BY	DATE
'A'	GMR	12/04/2017

WINDOM, MINNESOTA
WASTEWATER TREATMENT FACILITY IMPROVEMENTS
CODE ANALYSIS & LIFE-SAFETY PLAN(S)

SHEET 4.01

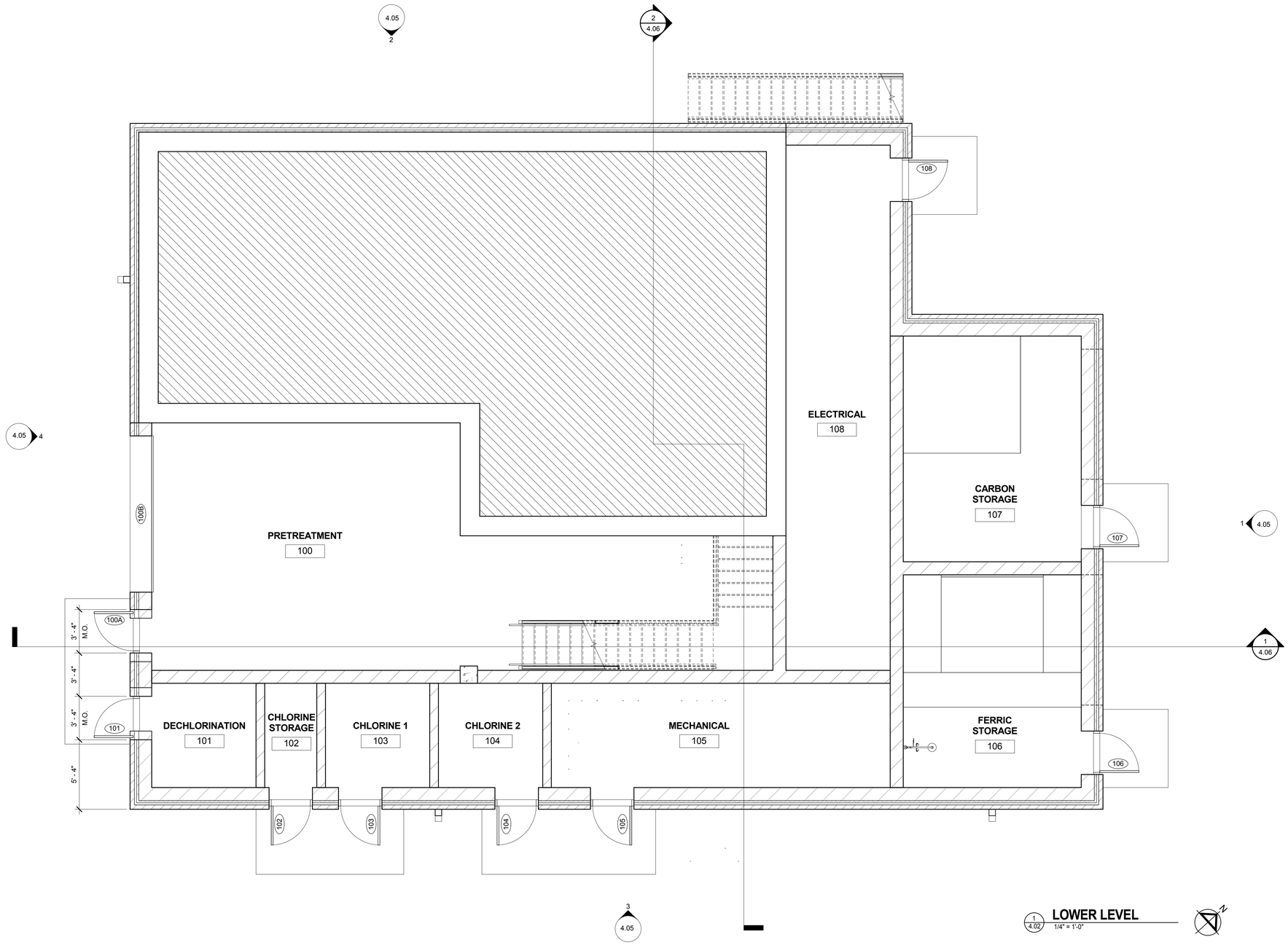

1 4.02 **LOWER LEVEL**
1/4" = 1'-0"

KEY NOTE LEGEND

FLOOR PLAN GENERAL NOTES

- ALL CONSTRUCTION SHALL COMPLY WITH ALL APPLICABLE LAWS, CODES, ORDINANCES AND REGULATIONS.
- IN THE EVENT OF A DISCREPENCY IN THE CONSTRUCTION DRAWINGS AND/OR SPECIFICATIONS AND/OR EXISTING CONDITIONS, THE G.C. SHALL CONTACT THE OWNER FOR RESOLUTION PRIOR TO COMMENCING THE WORK IN QUESTION.
- DO NOT SCALE THE CONSTRUCTION DRAWINGS.
- THE G.C. SHALL PROVIDE SOLID BLOCKING/ BACKING IN RATINGS COMPLIANT WITH THE CODE ANALYSIS AS NEEDED TO SECURE FIXTURES, FURNISHINGS AND ACCESSORIES.
- REFER TO INDIVIDUAL DRAWINGS WITHIN THE CONSTRUCTION DRAWING SET FOR ADDITIONAL GENERAL NOTES.

SCALES SHOWN ON DRAWINGS ARE FOR 24"X36" SIZE SHEETS ONLY. DRAWINGS PLOTTED ON ANY OTHER SIZE SHEETS NEED TO HAVE SCALES ADJUSTED ACCORDINGLY

© COPYRIGHT BOLTON & MENK, INC. 2016, ALL RIGHTS RESERVED
WILKUS ARCHITECTS, P.A. PROJECT NUMBER: 2017-0826

WILKUS ARCHITECTS
15 Ninth Avenue North
Hopkins, MN 55343
Phone: 952 941 8660
www.wilkusarch.com

I HEREBY CERTIFY THAT THIS PLAN, SPECIFICATION, OR REPORT WAS PREPARED BY ME OR UNDER MY DIRECT SUPERVISION AND THAT I AM A DULY LICENSED ARCHITECT UNDER THE LAWS OF THE STATE OF MINNESOTA.

SIGNATURE: TYPED OR PRINTED NAME: Jeffrey M. Rapp

DATE: 12/06/2017 LICENSE NO.: 22274 EXP. DATE: 06/30/2018

BOLTON & MENK
www.bolton-menk.com

REV.	BY	DATE
'A'	GMR	12/04/2017

WINDOM, MINNESOTA

WASTEWATER TREATMENT FACILITY IMPROVEMENTS

MAIN LEVEL ARCHITECTURAL FLOOR PLAN

SHEET 4.02

ROOM FINISH SCHEDULE

RM. #	ROOM NAME	FLOOR	BASE	WALLS	CEILING	CLG. HEIGHT	NOTES
100	PRETREATMENT						
101	DECHLORINATION						
102	CHLORINE STORAGE						
103	CHLORINE 1						
104	CHLORINE 2						
105	MECHANICAL						
106	FERRIC STORAGE						
107	CARBON STORAGE						
108	ELECTRICAL						
200	UPPER LEVEL MEZZANINE						

DOOR SCHEDULE

DOOR #	LEAF DIMENSIONS			LEAF TYPE	LEAF MATERIAL	FRAME TYPE	FRAME DIMENSIONS		FRAME MATERIAL	HARDWARE GROUP	FIRE RATING	REMARKS
	WIDTH	HEIGHT	THICKNESS				JAMB WIDTH	HEAD WIDTH				
100A	3' - 0"	7' - 0"	1 3/4"	A	H.M. (INSULATED)	1	0' - 2"	0' - 4"	H.M. (THERMALLY-BROKEN)	1	-	
100B	12' - 0"	12' - 0"	1 1/2"	B	MTL. (INSULATED)	N/A			N/A			
101	3' - 0"	7' - 0"	1 3/4"	A	H.M. (INSULATED)	1	0' - 2"	0' - 4"	H.M. (THERMALLY-BROKEN)	1	-	
102	3' - 0"	7' - 0"	1 3/4"	A	H.M. (INSULATED)	1	0' - 2"	0' - 4"	H.M. (THERMALLY-BROKEN)	1	-	
103	3' - 0"	7' - 0"	1 3/4"	A	H.M. (INSULATED)	1	0' - 2"	0' - 4"	H.M. (THERMALLY-BROKEN)	1	-	
104	3' - 0"	7' - 0"	1 3/4"	A	H.M. (INSULATED)	1	0' - 2"	0' - 4"	H.M. (THERMALLY-BROKEN)	1	-	
105	3' - 0"	7' - 0"	1 3/4"	A	H.M. (INSULATED)	1	0' - 2"	0' - 4"	H.M. (THERMALLY-BROKEN)	1	-	
106	3' - 0"	7' - 0"	1 3/4"	A	H.M. (INSULATED)	1	0' - 2"	0' - 4"	H.M. (THERMALLY-BROKEN)	1	-	
107	3' - 0"	7' - 0"	1 3/4"	A	H.M. (INSULATED)	1	0' - 2"	0' - 4"	H.M. (THERMALLY-BROKEN)	1	-	
108	3' - 0"	7' - 0"	1 3/4"	A	H.M. (INSULATED)	1	0' - 2"	0' - 4"	H.M. (THERMALLY-BROKEN)	1	-	
200	3' - 0"	7' - 0"	1 3/4"	A	H.M. (INSULATED)	1	0' - 2"	0' - 4"	H.M. (THERMALLY-BROKEN)	1	-	

FRAME, LEAF & WINDOW TYPES

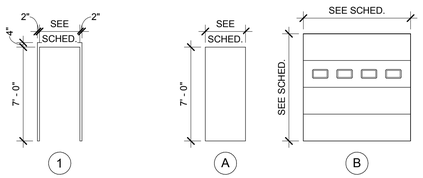

1 — H.M. - PAINT - INSUL. AND T.B.@ EXT.

A — H.M. - PAINT - INSUL. @ EXT.

B — PREFINISHED MTL. SECTIONAL - INSUL.

HARDWARE GROUPS

GROUP #1

3	BUTT HINGES
1	PANIC EXIT DEVICE W/ LEVER TRIM
1	CYLINDER
1	DOOR CLOSER W/ OVHD. STOP
1	KICK PLATE
1	THRESHOLD
1	SWEEP
1	WEATHERSTRIPPING
1	RAIN DRIP GUARD

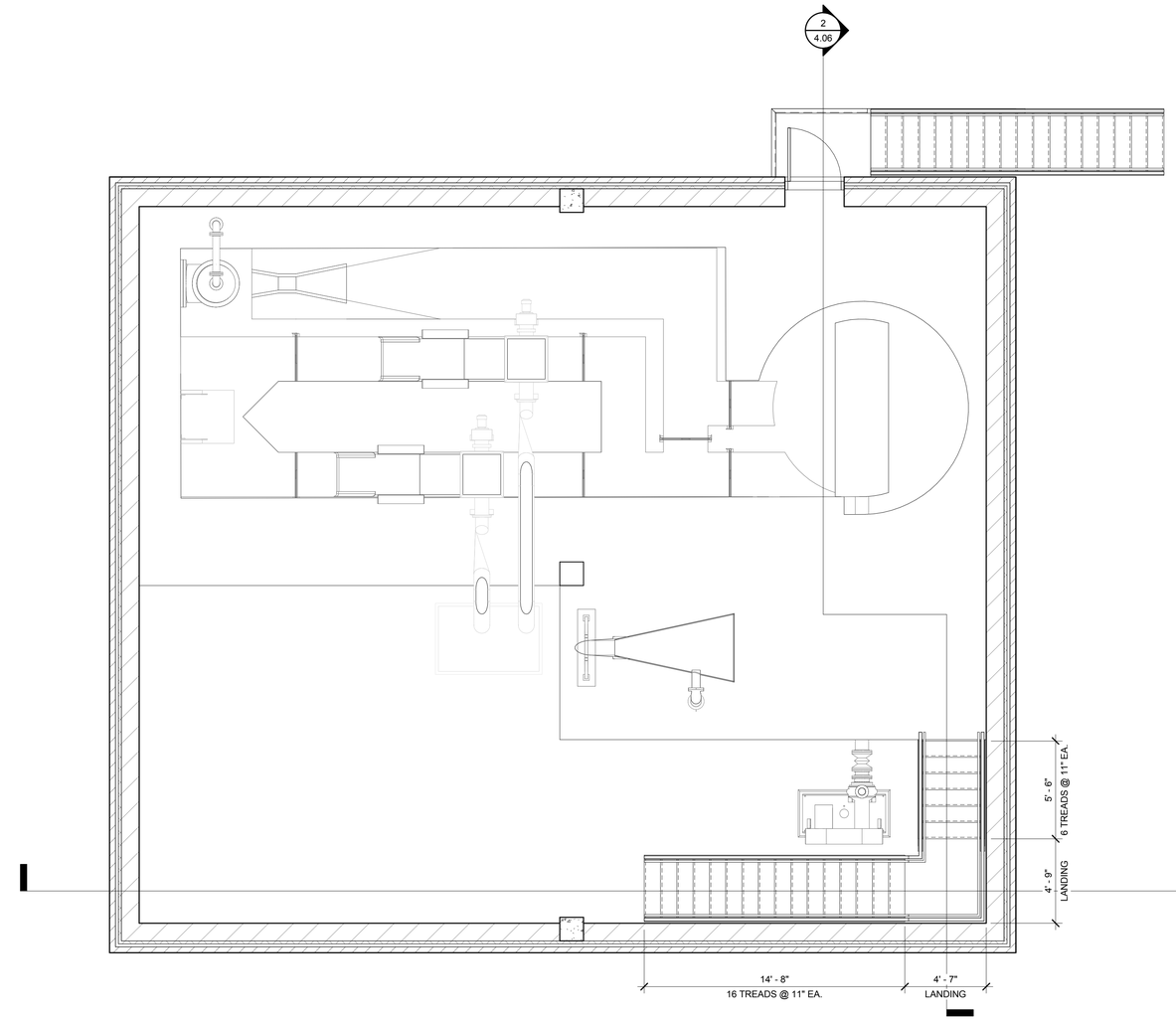

1 / 4.03 **UPPER LEVEL**
1/4" = 1'-0"

ARCHITECTURAL FLOOR PLAN GENERAL NOTES

- ALL CONSTRUCTION SHALL COMPLY WITH ALL APPLICABLE LAWS, CODES, ORDINANCES AND REGULATIONS.
- IN THE EVENT OF A DISCREPENCY IN THE CONSTRUCTION DRAWINGS AND/OR SPECFICATIONS AND/OR EXISTING CONDITIONS, THE G.C. SHALL CONTACT THE OWNER FOR RESOLUTION PRIOR TO COMMENCING THE WORK IN QUESTION.
- DO NOT SCALE THE CONSTRUCTION DRAWINGS.
- THE G.C. SHALL PROVIDE SOLID BLOCKING/ BACKING IN RATINGS COMPLIANT WITH THE CODE ANALYSIS AS NEEDED TO SECURE FIXTURES, FURNISHINGS AND ACCESSORIES.
- REFER TO INDIVIDUAL DRAWINGS WITHIN THE CONSTRUCTION DRAWING SET FOR ADDITIONAL GENERAL NOTES.

SCALES SHOWN ON DRAWINGS ARE FOR 24"X36" SIZE SHEETS ONLY. DRAWINGS PLOTTED ON ANY OTHER SIZE SHEETS NEED TO HAVE SCALES ADJUSTED ACCORDINGLY

© COPYRIGHT BOLTON & MENK, INC. 2016, ALL RIGHTS RESERVED

WILKUS ARCHITECTS PROJECT NUMBER: 2017-0826

WILKUS ARCHITECTS
15 Ninth Avenue North
Hopkins, MN 55343
Phone: 952.941.8660
www.wilkusarch.com

I HEREBY CERTIFY THAT THIS PLAN, SPECIFICATION, OR REPORT WAS PREPARED BY ME OR UNDER MY DIRECT SUPERVISION AND THAT I AM A DULY LICENSED ARCHITECT UNDER THE LAWS OF THE STATE OF MINNESOTA.

SIGNATURE: TYPED OR PRINTED NAME: Jeffrey M. Rapp

DATE: 12/06/2017 LICENSE NO.: 22274 EXP. DATE: 06/30/2018

BOLTON & MENK

www.bolton-menk.com

REV.	BY	DATE
'A'	GMR	12/04/2017

WINDOM, MINNESOTA

WASTEWATER TREATMENT FACILITY IMPROVEMENTS

UPPER LEVEL ARCHITECTURAL FLOOR PLAN & SCHEDULES

SHEET 4.03

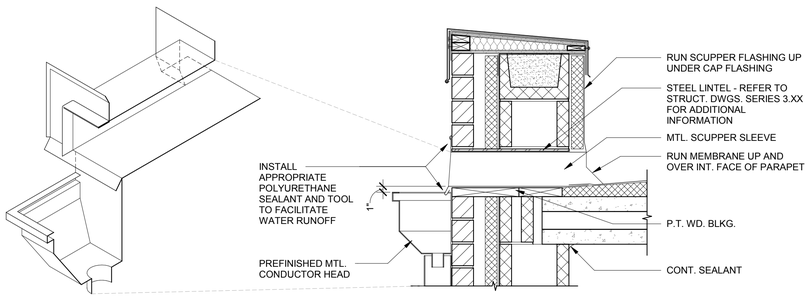

2/4.04 **SCUPPER (TYP.)**
1" = 1'-0"

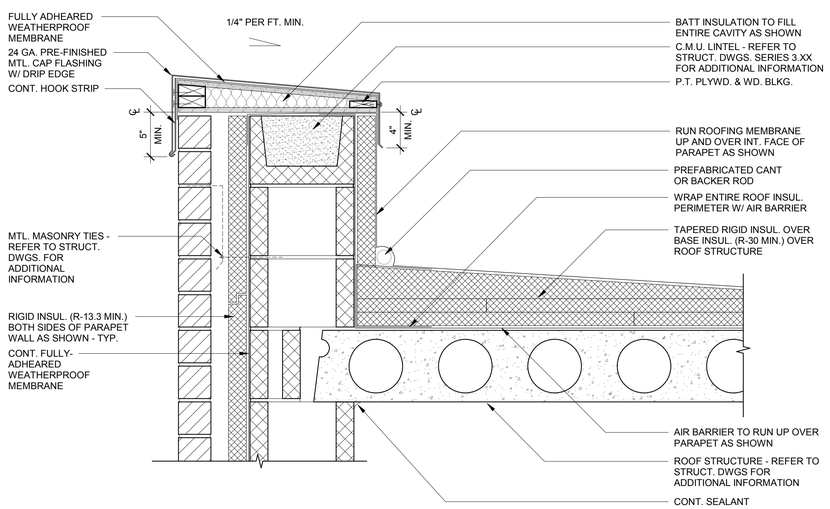

3/4.04 **PARAPET (TYP.)**
1 1/2" = 1'-0"

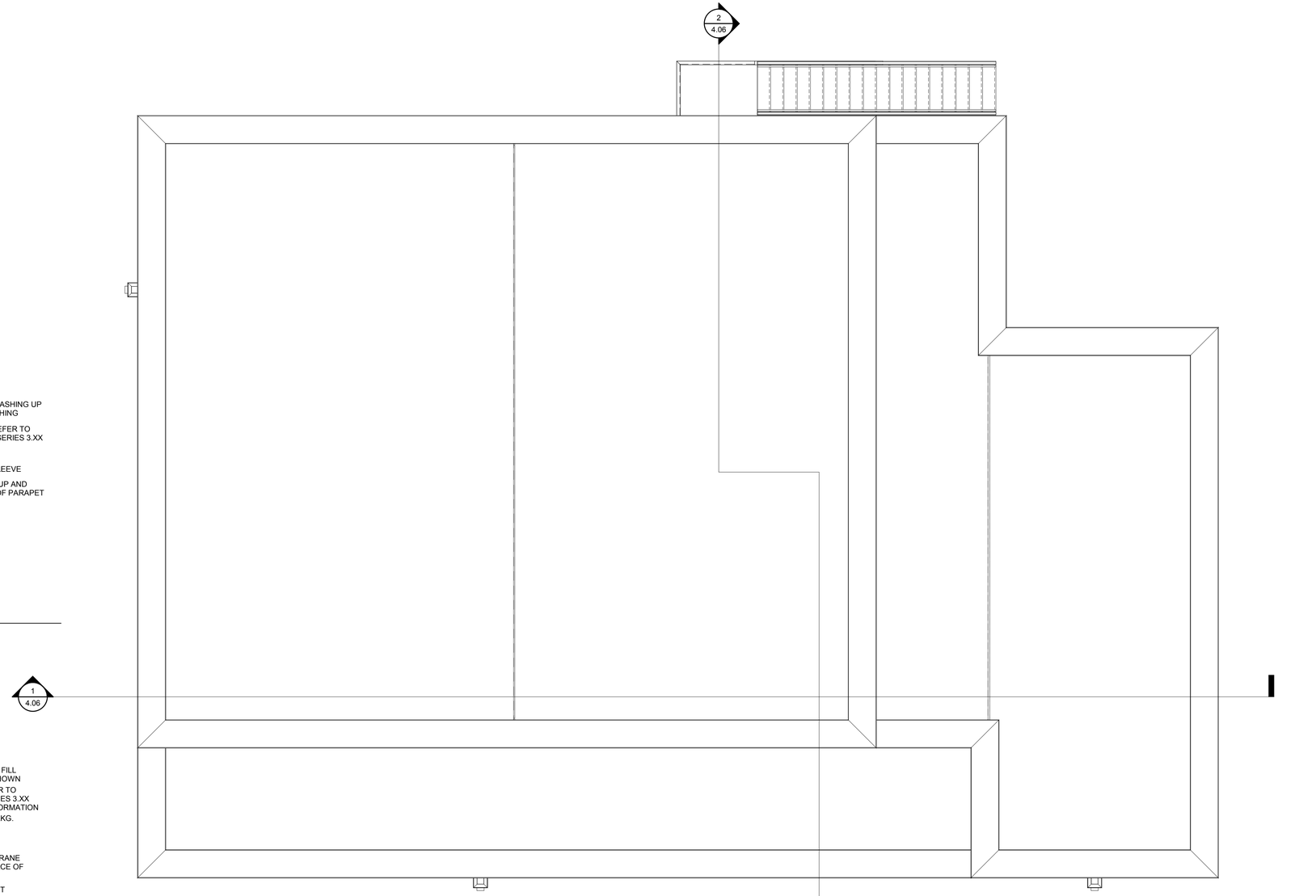

1/4.04 **ROOF PLAN**
1/4" = 1'-0"

KEY NOTE LEGEND

SCALES SHOWN ON DRAWINGS ARE FOR 24"X36" SIZE SHEETS ONLY. DRAWINGS PLOTTED ON ANY OTHER SIZE SHEETS NEED TO HAVE SCALES ADJUSTED ACCORDINGLY

© COPYRIGHT BOLTON & MENK, INC. 2016, ALL RIGHTS RESERVED
WILKUS ARCHITECTS, P.A. PROJECT NUMBER: 2017-0826

WILKUS ARCHITECTS
15 Ninth Avenue North
Hopkins, MN 55343
Phone: 952.941.8660
www.wilkusarch.com

I HEREBY CERTIFY THAT THIS PLAN, SPECIFICATION, OR REPORT WAS PREPARED BY ME OR UNDER MY DIRECT SUPERVISION AND THAT I AM A DULY LICENSED ARCHITECT UNDER THE LAWS OF THE STATE OF MINNESOTA.

SIGNATURE: TYPED OR PRINTED NAME: Jeffrey M. Rapp
DATE: 12/06/2017 LICENSE NO.: 22274 EXP. DATE: 06/30/2018

BOLTON & MENK
www.bolton-menk.com

REV.	BY	DATE
'A'	GMR	12/04/2017

WINDOM, MINNESOTA
WASTEWATER TREATMENT FACILITY IMPROVEMENTS
ARCHITECTURAL ROOF PLAN

SHEET 4.04

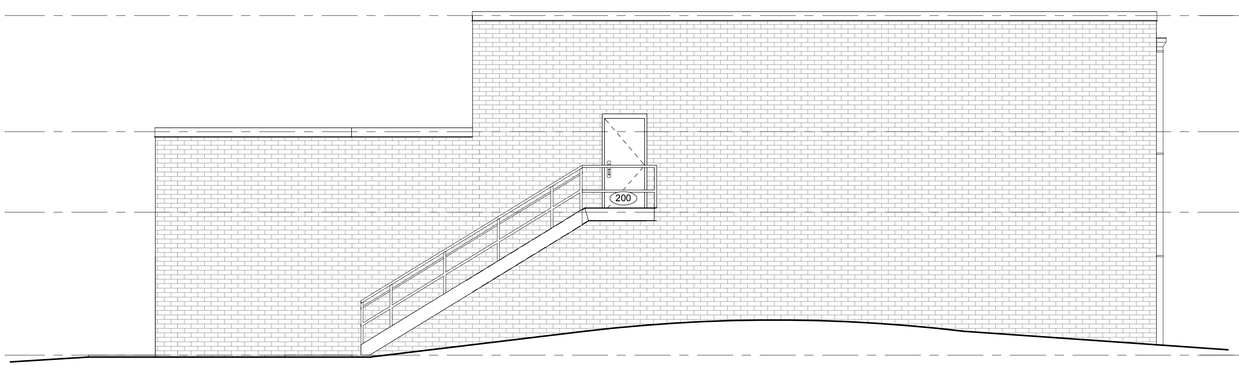

2 / 4.05 **NORTHWEST**
3/16" = 1'-0"

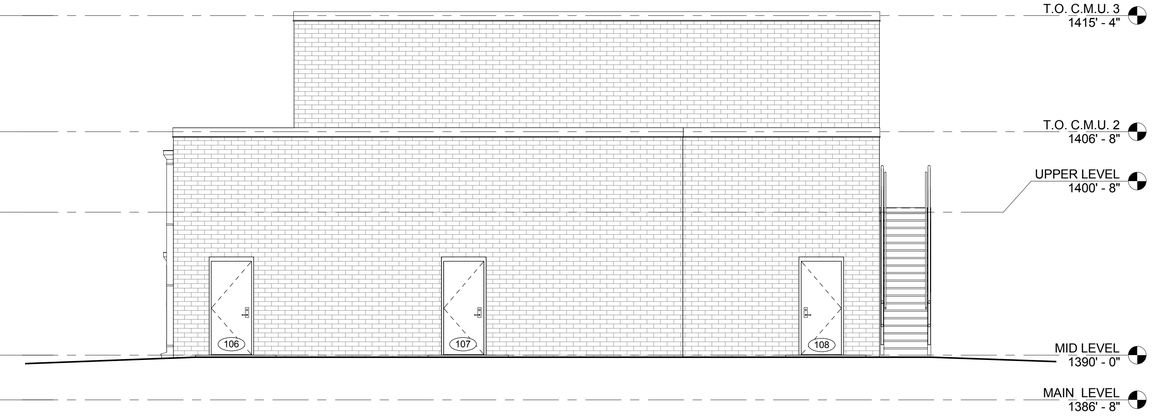

1 / 4.05 **NORTHEAST**
3/16" = 1'-0"

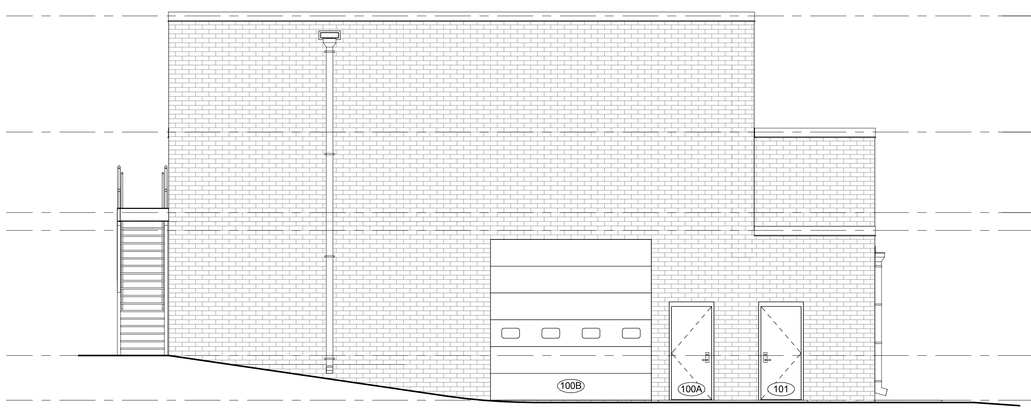

4 / 4.05 **SOUTHWEST**
3/16" = 1'-0"

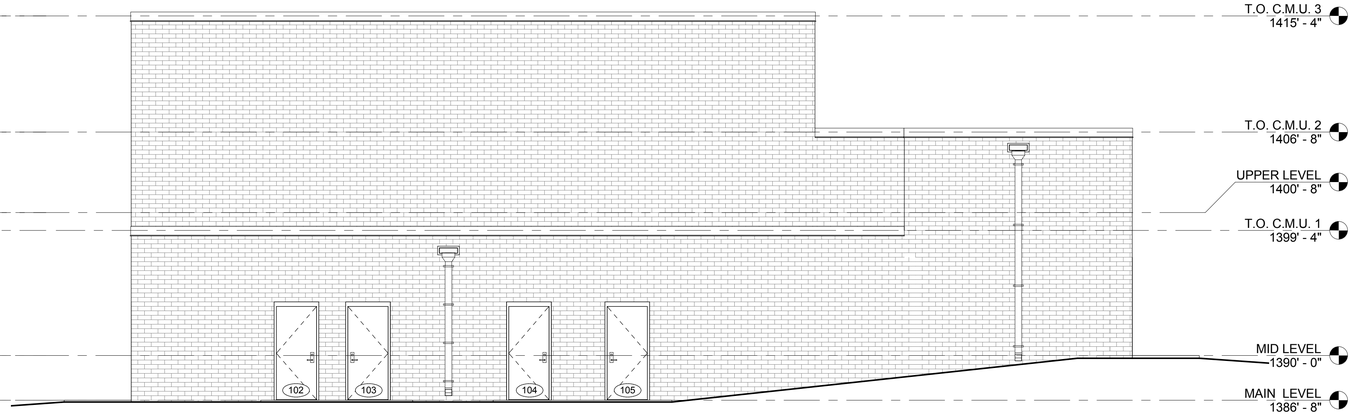

3 / 4.05 **SOUTHEAST**
3/16" = 1'-0"

SCALES SHOWN ON DRAWINGS ARE FOR 24"X36" SIZE SHEETS ONLY. DRAWINGS PLOTTED ON ANY OTHER SIZE SHEETS NEED TO HAVE SCALES ADJUSTED ACCORDINGLY

© COPYRIGHT BOLTON & MENK, INC. 2016, ALL RIGHTS RESERVED
WILKUS ARCHITECTS, P.A. PROJECT NUMBER: 2017-0826

WILKUS ARCHITECTS
15 Ninth Avenue North
Hopkins, MN 55343
Phone: 952.941.8660
www.wilkusarch.com

I HEREBY CERTIFY THAT THIS PLAN, SPECIFICATION, OR REPORT WAS PREPARED BY ME OR UNDER MY DIRECT SUPERVISION AND THAT I AM A DULY LICENSED ARCHITECT UNDER THE LAWS OF THE STATE OF MINNESOTA.

SIGNATURE: _____ TYPED OR PRINTED NAME: Jeffrey M. Rapp

DATE: 12/06/2017 LICENSE NO.: 22274 EXP. DATE: 06/30/2018

BOLTON & MENK
www.bolton-menk.com

REV.	BY	DATE
'A'	GMR	12/04/2017

WINDOM, MINNESOTA

WASTEWATER TREATMENT FACILITY IMPROVEMENTS

EXTERIOR ELEVATIONS

SHEET
4.05

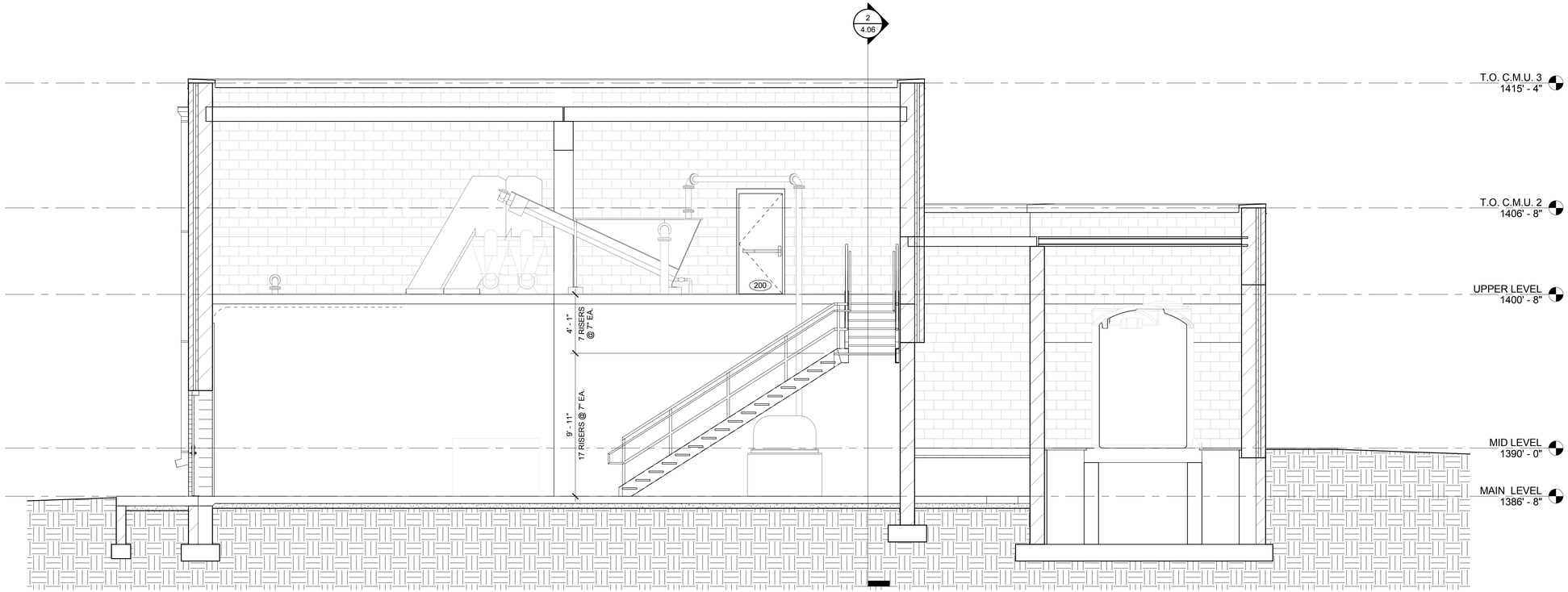

1 4.06 **SECTION 1**
1/4" = 1'-0"

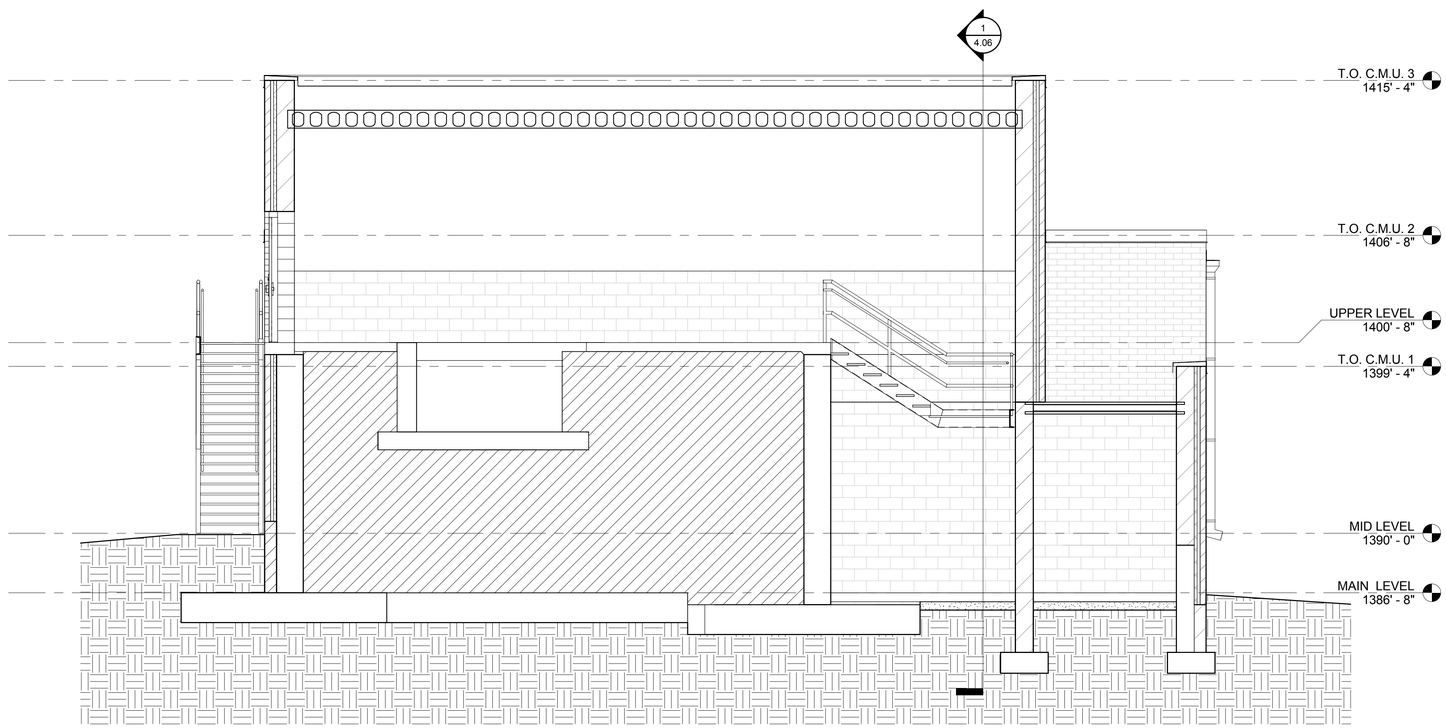

2 4.06 **SECTION 2**
1/4" = 1'-0"

SCALES SHOWN ON DRAWINGS ARE FOR 24"X36" SIZE SHEETS ONLY. DRAWINGS PLOTTED ON ANY OTHER SIZE SHEETS NEED TO HAVE SCALES ADJUSTED ACCORDINGLY

© COPYRIGHT BOLTON & MENK, INC. 2016, ALL RIGHTS RESERVED

WILKUS ARCHITECTS PROJECT NUMBER: 2017-0826

WILKUS ARCHITECTS
15 Ninth Avenue North
Hopkins, MN 55343
Phone: 952 941 8660
www.wilkusarch.com

I HEREBY CERTIFY THAT THIS PLAN, SPECIFICATION, OR REPORT WAS PREPARED BY ME OR UNDER MY DIRECT SUPERVISION AND THAT I AM A DULY LICENSED ARCHITECT UNDER THE LAWS OF THE STATE OF MINNESOTA.

SIGNATURE: _____ TYPED OR PRINTED NAME: Jeffrey M. Rapp

DATE: 12/06/2017 LICENSE NO.: 22274 EXP. DATE: 06/30/2018

BOLTON & MENK
www.bolton-menk.com

REV.	BY	DATE
'A'	GMR	12/04/2017

WINDOM, MINNESOTA

WASTEWATER TREATMENT FACILITY IMPROVEMENTS

ARCHITECTURAL BUILDING SECTIONS

SHEET 4.06

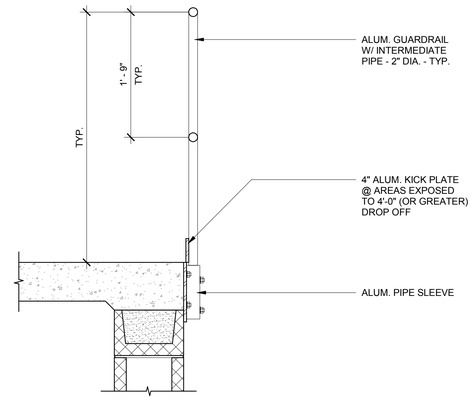

15 / 4.07 **GUARDRAIL (TYP.)**
1" = 1'-0"

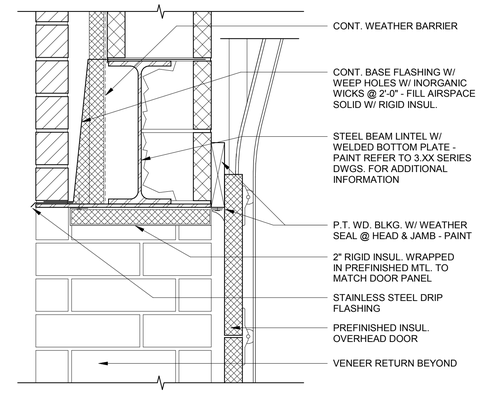

13 / 4.07 **OVERHEAD DOOR HEAD**
1 1/2" = 1'-0"

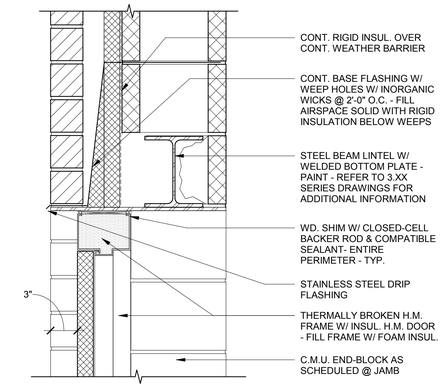

11 / 4.07 **DOOR HEAD**
1 1/2" = 1'-0"

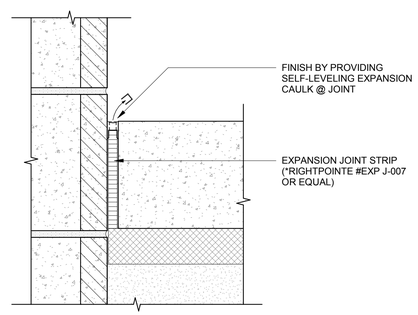

10 / 4.07 **FLOOR SLAB EXPANSION JOINT (INT.)**
3" = 1'-0"

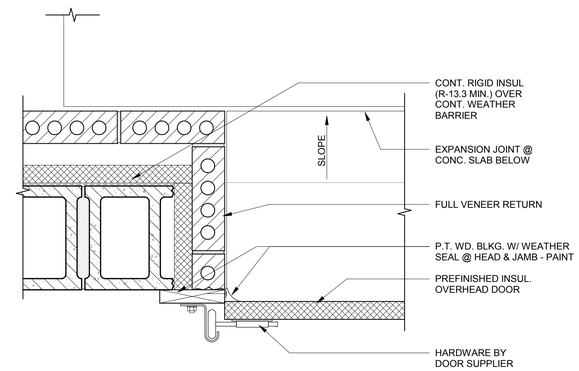

14 / 4.07 **OVERHEAD DOOR JAMB**
1 1/2" = 1'-0"

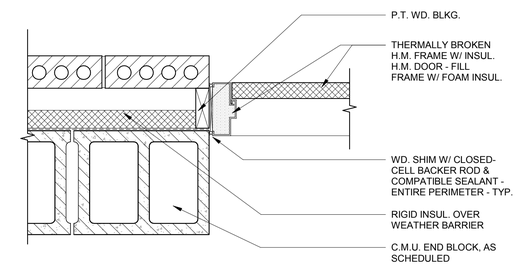

4 / 4.07 **DOOR JAMB**
1 1/2" = 1'-0"

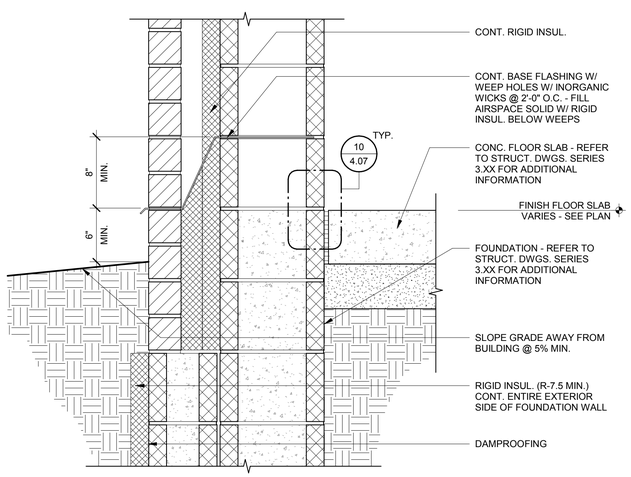

1 / 4.07 **WALL BASE (TYP.)**
1 1/2" = 1'-0"

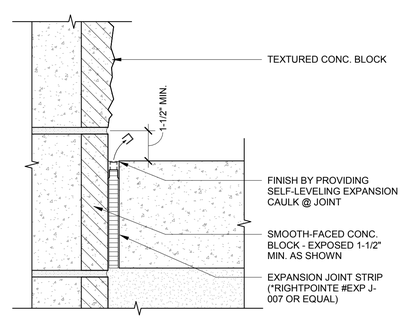

9 / 4.07 **FLOOR SLAB EXPANSION JOINT (EXT.)**
3" = 1'-0"

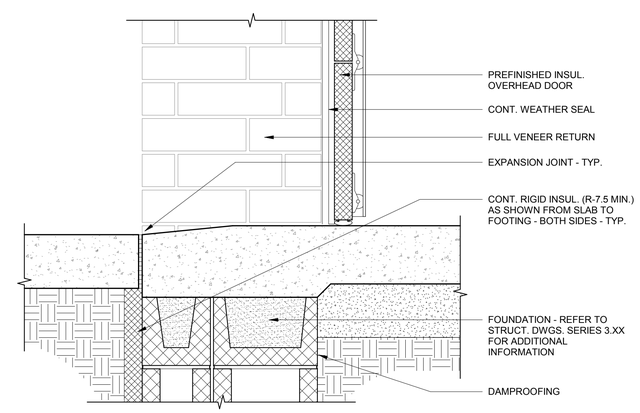

12 / 4.07 **OVERHEAD DOOR THRESHOLD**
1 1/2" = 1'-0"

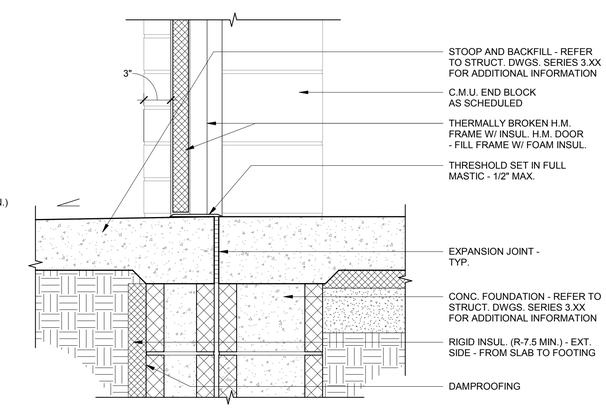

6 / 4.07 **DOOR THRESHOLD**
1 1/2" = 1'-0"

SCALES SHOWN ON DRAWINGS ARE FOR 24"X36" SIZE SHEETS ONLY. DRAWINGS PLOTTED ON ANY OTHER SIZE SHEETS NEED TO HAVE SCALES ADJUSTED ACCORDINGLY

© COPYRIGHT BOLTON & MENK, INC. 2016, ALL RIGHTS RESERVED
WILKUS ARCHITECTS, P.A. PROJECT NUMBER: 2017-0826

WILKUS ARCHITECTS
15 Ninth Avenue North
Hopkins, MN 55343
Phone: 952 941 8660
www.wilkusarch.com

I HEREBY CERTIFY THAT THIS PLAN, SPECIFICATION, OR REPORT WAS PREPARED BY ME OR UNDER MY DIRECT SUPERVISION AND THAT I AM A DULY LICENSED ARCHITECT UNDER THE LAWS OF THE STATE OF MINNESOTA.

SIGNATURE: TYPED OR PRINTED NAME: Jeffrey M. Rapp
DATE: 12/06/2017 LICENSE NO.: 22274 EXP. DATE: 06/30/2018

BOLTON & MENK
www.bolton-menk.com

REV.	BY	DATE
'A'	GMR	12/04/2017

WINDOM, MINNESOTA
WASTEWATER TREATMENT FACILITY IMPROVEMENTS
ARCHITECTURAL DETAILS

SHEET 4.07

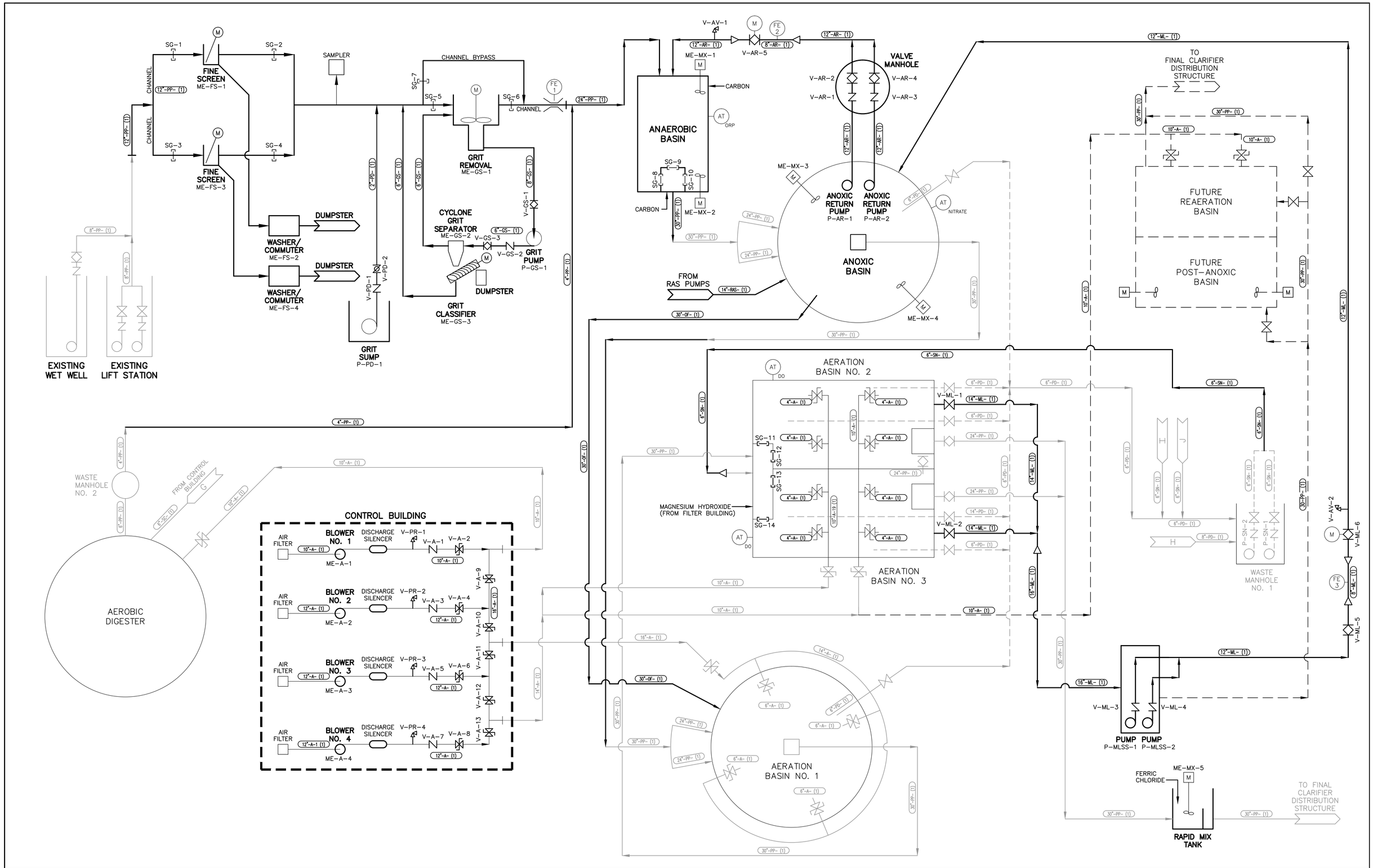

SCALES SHOWN ON DRAWINGS ARE FOR 24"x36" SIZE SHEETS ONLY. DRAWINGS PLOTTED ON ANY OTHER SIZE SHEETS NEED TO HAVE SCALES ADJUSTED ACCORDINGLY

© Bolton & Menk, Inc. 2017, All Rights Reserved
H:\WIND\T22113672\CAD\ENV\113672_D_BASE_501-503-PROCESS-FLOW.DWG 12/7/2017 6:21:05 PM

I HEREBY CERTIFY THAT THIS PLAN, SPECIFICATION OR REPORT WAS PREPARED BY ME OR UNDER MY DIRECT SUPERVISION, AND THAT I AM A DULY LICENSED PROFESSIONAL ENGINEER UNDER THE LAWS OF THE STATE OF MINNESOTA

SIGNATURE: Tejpal S. Bala TYPED OR PRINTED NAME: Tejpal Singh Bala

DATE 12/4/2017 LIC. NO. 49574

BOLTON & MENK

www.bolton-menk.com

REV.	BY	DATE
A	CAL	12/4/2017

CITY OF WINDOM, MINNESOTA

2017 WASTEWATER TREATMENT FACILITY IMPROVEMENTS

PROCESS FLOW DIAGRAM

SHEET 5.01

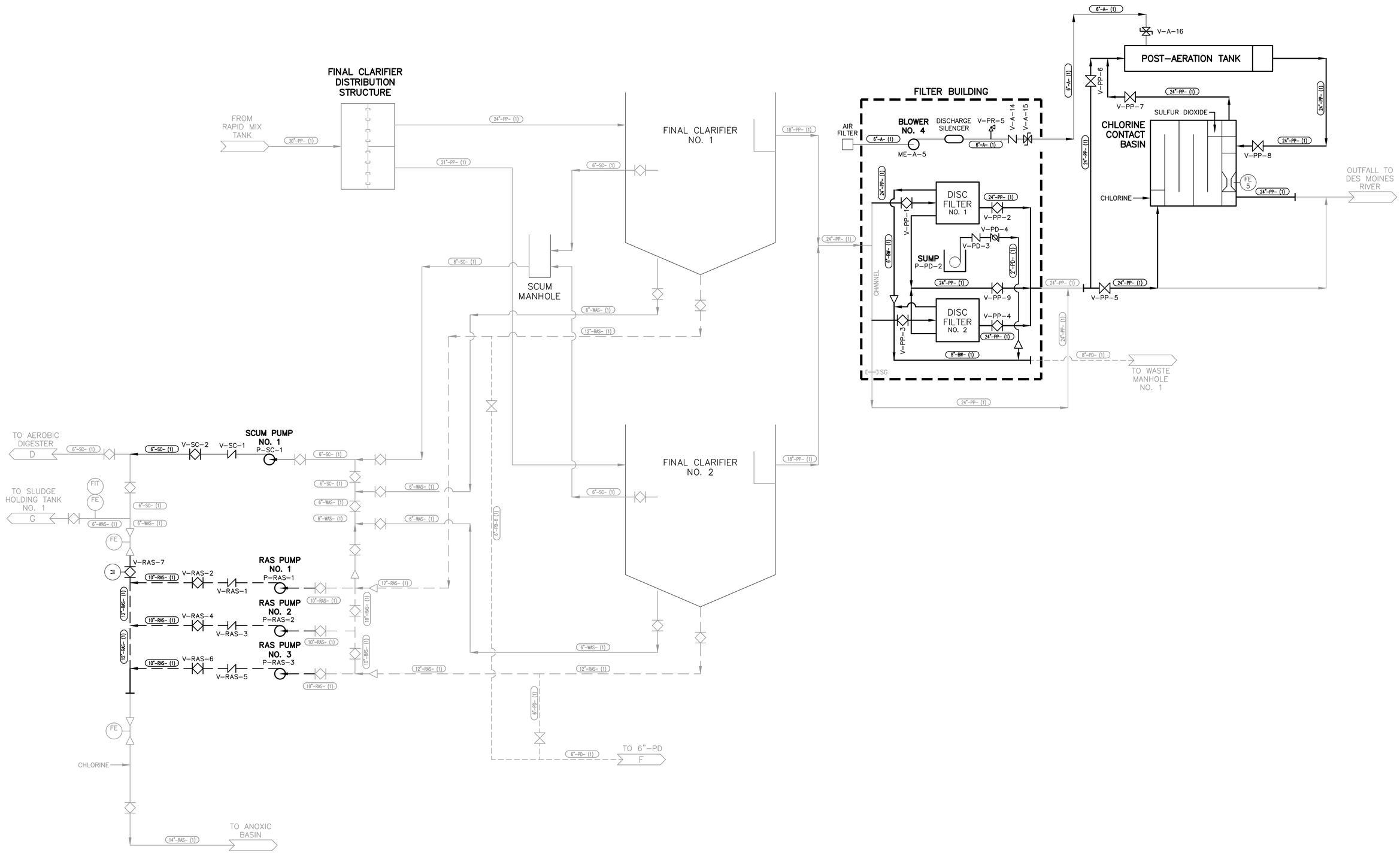

SCALES SHOWN ON DRAWINGS ARE FOR 24"x36" SIZE SHEETS ONLY. DRAWINGS PLOTTED ON ANY OTHER SIZE SHEETS NEED TO HAVE SCALES ADJUSTED ACCORDINGLY

© Bolton & Menk, Inc. 2017, All Rights Reserved
H:\WIND\T22113672\CAD\ENV\113672_D_BASE_501-503-PROCESS-FLOW.DWG 12/7/2017 6:21:05 PM

I HEREBY CERTIFY THAT THIS PLAN, SPECIFICATION OR REPORT WAS PREPARED BY ME OR UNDER MY DIRECT SUPERVISION, AND THAT I AM A DULY LICENSED PROFESSIONAL ENGINEER UNDER THE LAWS OF THE STATE OF MINNESOTA

SIGNATURE: Tejpal S. Bala TYPED OR PRINTED NAME: Tejpal Singh Bala

DATE 12/4/2017 LIC. NO. 49574

BOLTON & MENK

www.bolton-menk.com

REV.	BY	DATE
A	CAL	12/4/2017

CITY OF WINDOM, MINNESOTA

2017 WASTEWATER TREATMENT FACILITY IMPROVEMENTS

PROCESS FLOW DIAGRAM

SHEET 5.02

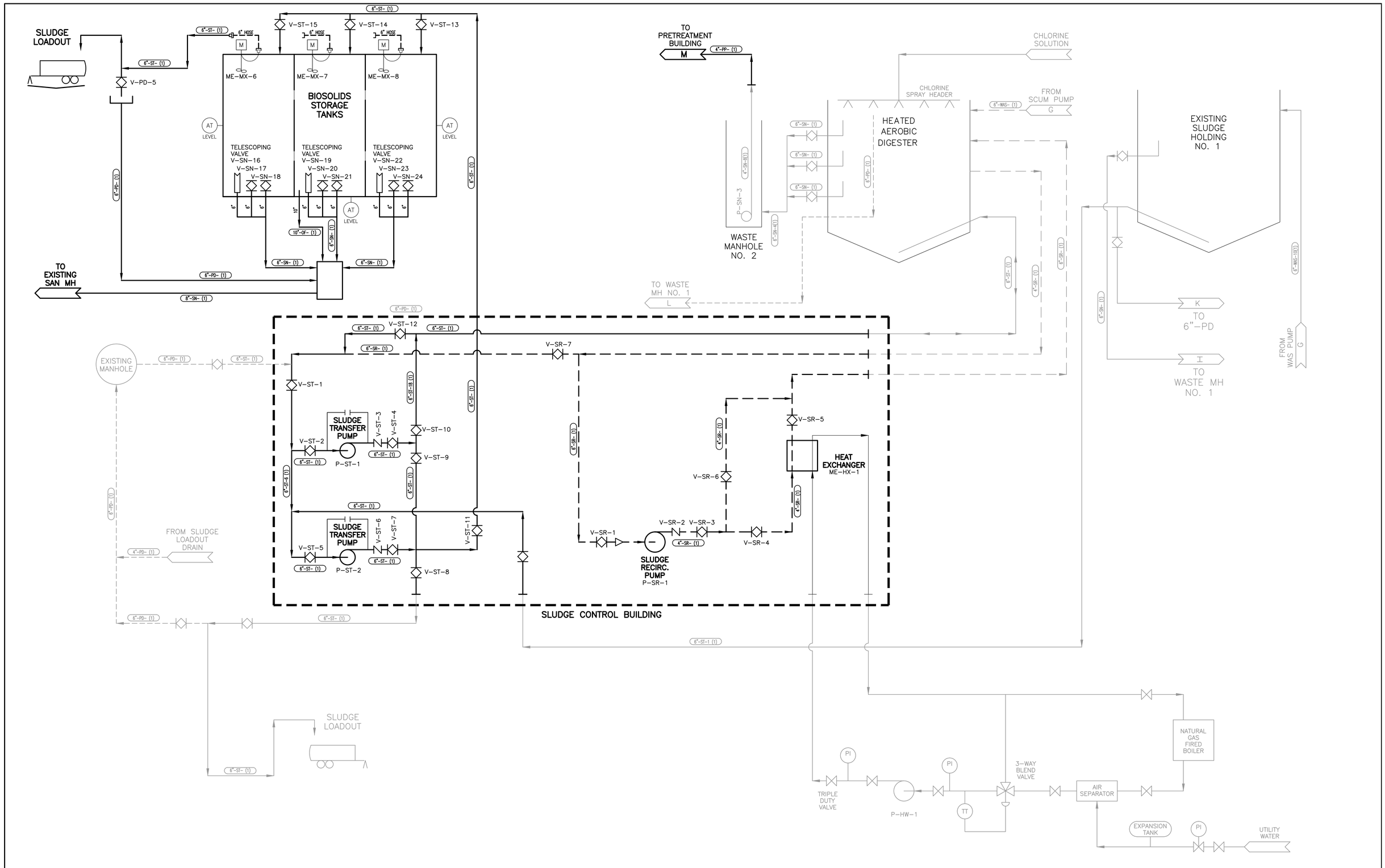

SCALES SHOWN ON DRAWINGS ARE FOR 24"x36" SIZE SHEETS ONLY. DRAWINGS PLOTTED ON ANY OTHER SIZE SHEETS NEED TO HAVE SCALES ADJUSTED ACCORDINGLY

© Bolton & Menk, Inc. 2017, All Rights Reserved
H:\WIND\T22113672\CAD\ENV\113672_D_BASE_501-503-PROCESS-FLOW.DWG 12/7/2017 6:21:05 PM

I HEREBY CERTIFY THAT THIS PLAN, SPECIFICATION OR REPORT WAS PREPARED BY ME OR UNDER MY DIRECT SUPERVISION, AND THAT I AM A DULY LICENSED PROFESSIONAL ENGINEER UNDER THE LAWS OF THE STATE OF MINNESOTA

SIGNATURE: Tejpal S. Bala TYPED OR PRINTED NAME: Tejpal Singh Bala

DATE 12/4/2017 LIC. NO. 49574

BOLTON & MENK

www.bolton-menk.com

REV.	BY	DATE
A	CAL	12/4/2017

CITY OF WINDOM, MINNESOTA

2017 WASTEWATER TREATMENT FACILITY IMPROVEMENTS

PROCESS FLOW DIAGRAM

SHEET 5.03

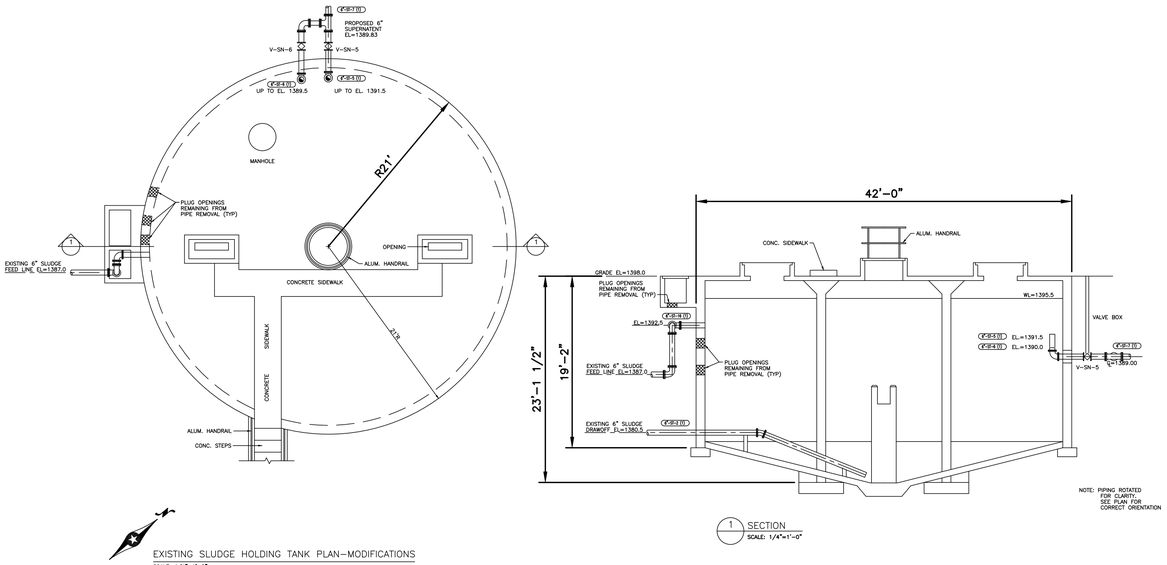

EXISTING SLUDGE HOLDING TANK PLAN–MODIFICATIONS
SCALE: 1/4"=1'-0"

1 SECTION
SCALE: 1/4"=1'-0"

DEMOLISH – EXISTING SLUDGE HOLDING TANK NO. 2

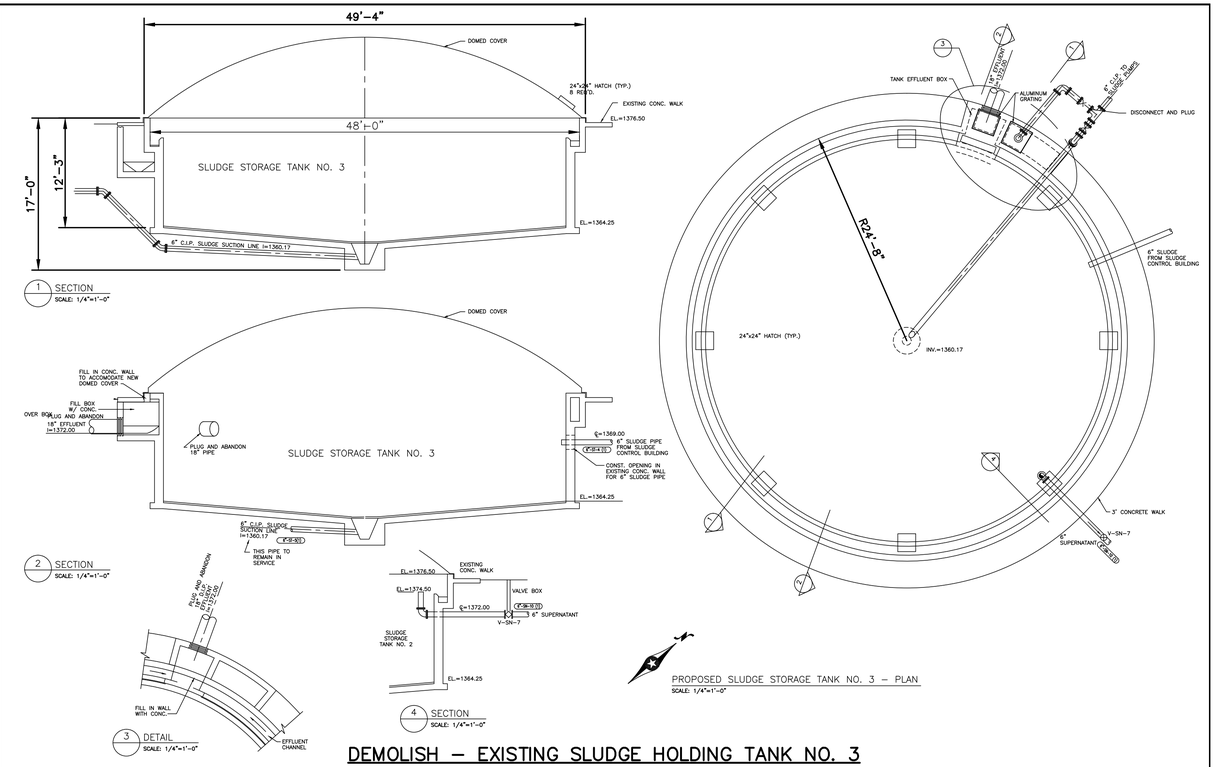

PROPOSED SLUDGE STORAGE TANK NO. 3 – PLAN
SCALE: 1/4"=1'-0"

DEMOLISH – EXISTING SLUDGE HOLDING TANK NO. 3

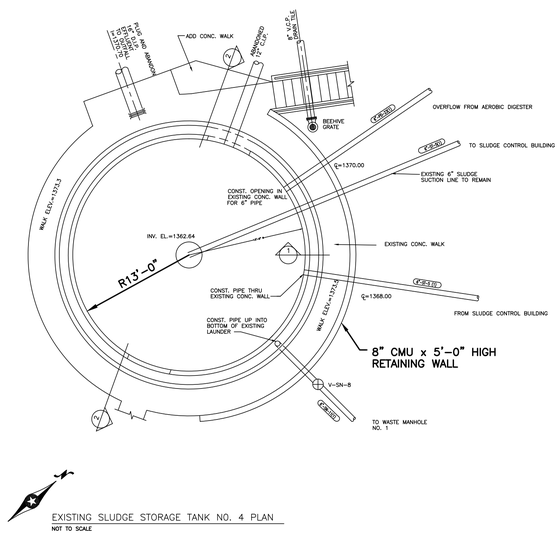

EXISTING SLUDGE STORAGE TANK NO. 4 PLAN
NOT TO SCALE

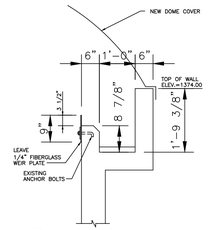

1 DETAIL
NOT TO SCALE

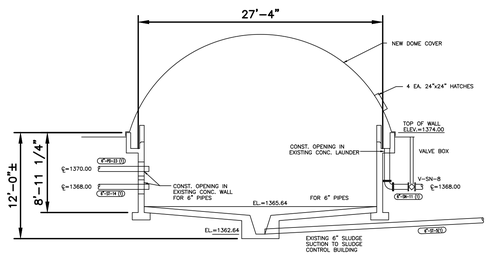

2 PROPOSED SLUDGE STORAGE TANK SECTION
NOT TO SCALE

NOTE: PIPING ROTATED IN SECTION FOR CLARITY. SEE PLAN FOR CORRECT ORIENTATION

DEMOLISH – EXISTING SLUDGE HOLDING TANK NO. 4

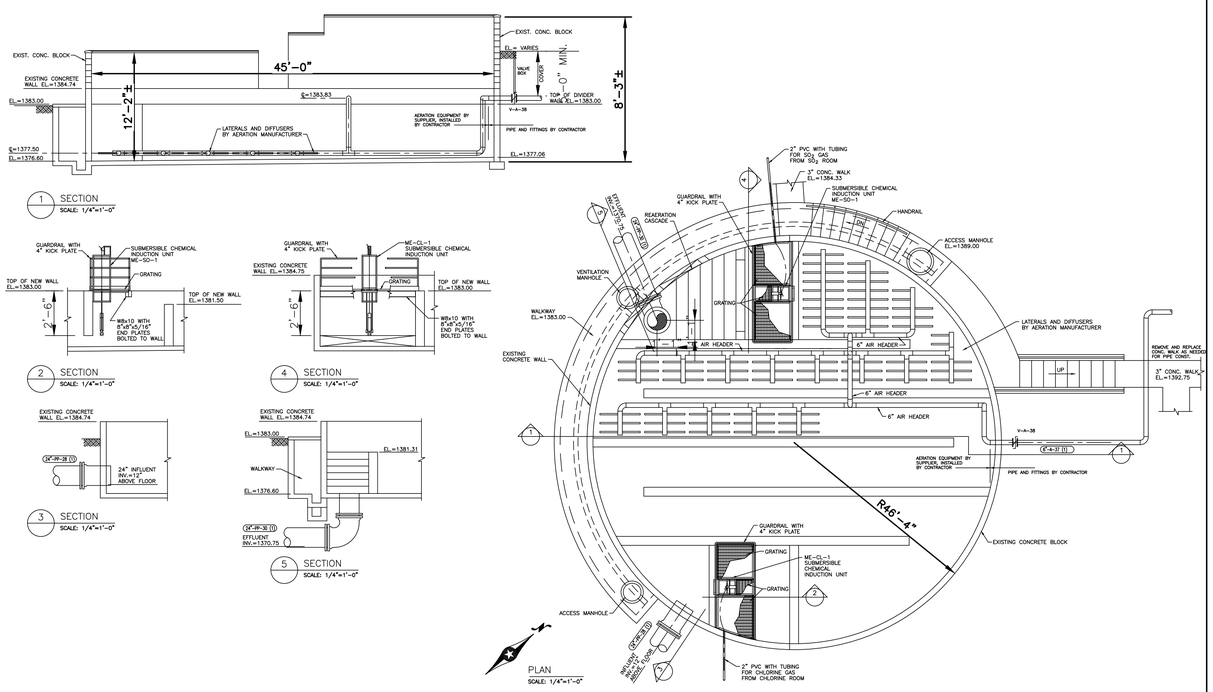

DEMOLISH – EXISTING CHLORINE CONTACT BASIN

SCALES SHOWN ON DRAWINGS ARE FOR 24"x36" SIZE SHEETS ONLY. DRAWINGS PLOTTED ON ANY OTHER SIZE SHEETS NEED TO HAVE SCALES ADJUSTED ACCORDINGLY

© Bolton & Menk, Inc. 2017, All Rights Reserved
H:\WIND\T22113672\CAD\ENV\113672_D_BASE_204–DEMOLITION–PLANS.DWG 12/7/2017 6:18:31 PM

I HEREBY CERTIFY THAT THIS PLAN, SPECIFICATION OR REPORT WAS PREPARED BY ME OR UNDER MY DIRECT SUPERVISION, AND THAT I AM A DULY LICENSED PROFESSIONAL ENGINEER UNDER THE LAWS OF THE STATE OF MINNESOTA

SIGNATURE: Tejpal S. Bala TYPED OR PRINTED NAME: Tejpal Singh Bala
DATE 12/4/2017 LIC. NO. 49574

BOLTON & MENK
www.bolton-menk.com

REV.	BY	DATE
A	CAL	12/4/2017

CITY OF WINDOM, MINNESOTA
2017 WASTEWATER TREATMENT FACILITY IMPROVEMENTS
EIXSTING SLUDGE HOLDING TANKS AND EXISTING CHLORINE CONTACT BASIN – DEMOLITION PLANS & SECTIONS

SHEET 5.04

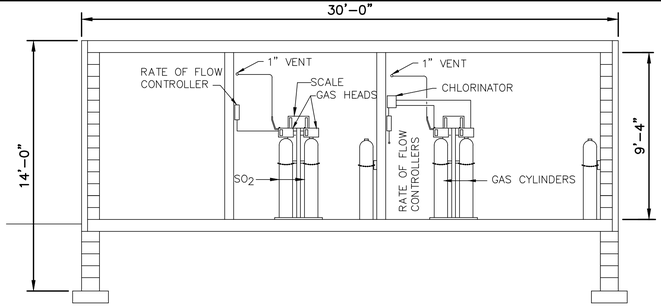

1 M4 SECTION
SCALE: 1/4"=1'-0"

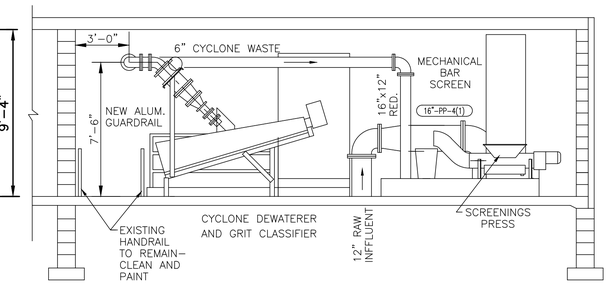

2 M4 SECTION
SCALE: 1/4"=1'-0"

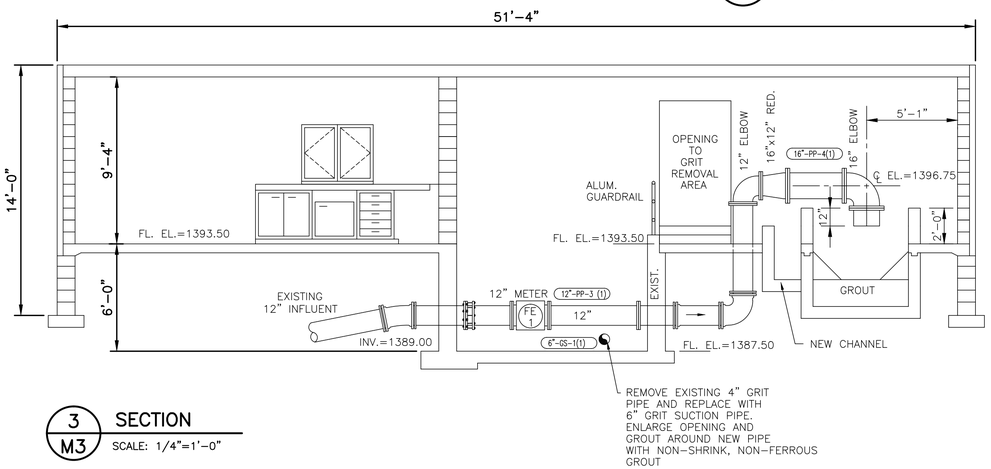

3 M3 SECTION
SCALE: 1/4"=1'-0"

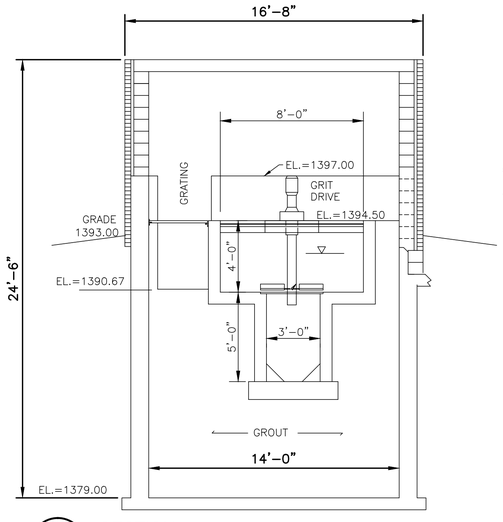

4 M4 SECTION
SCALE: 1/4"=1'-0"

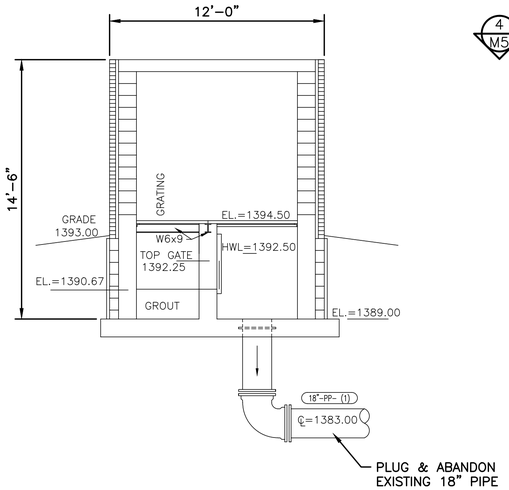

5 M4 SECTION
SCALE: 1/4"=1'-0"

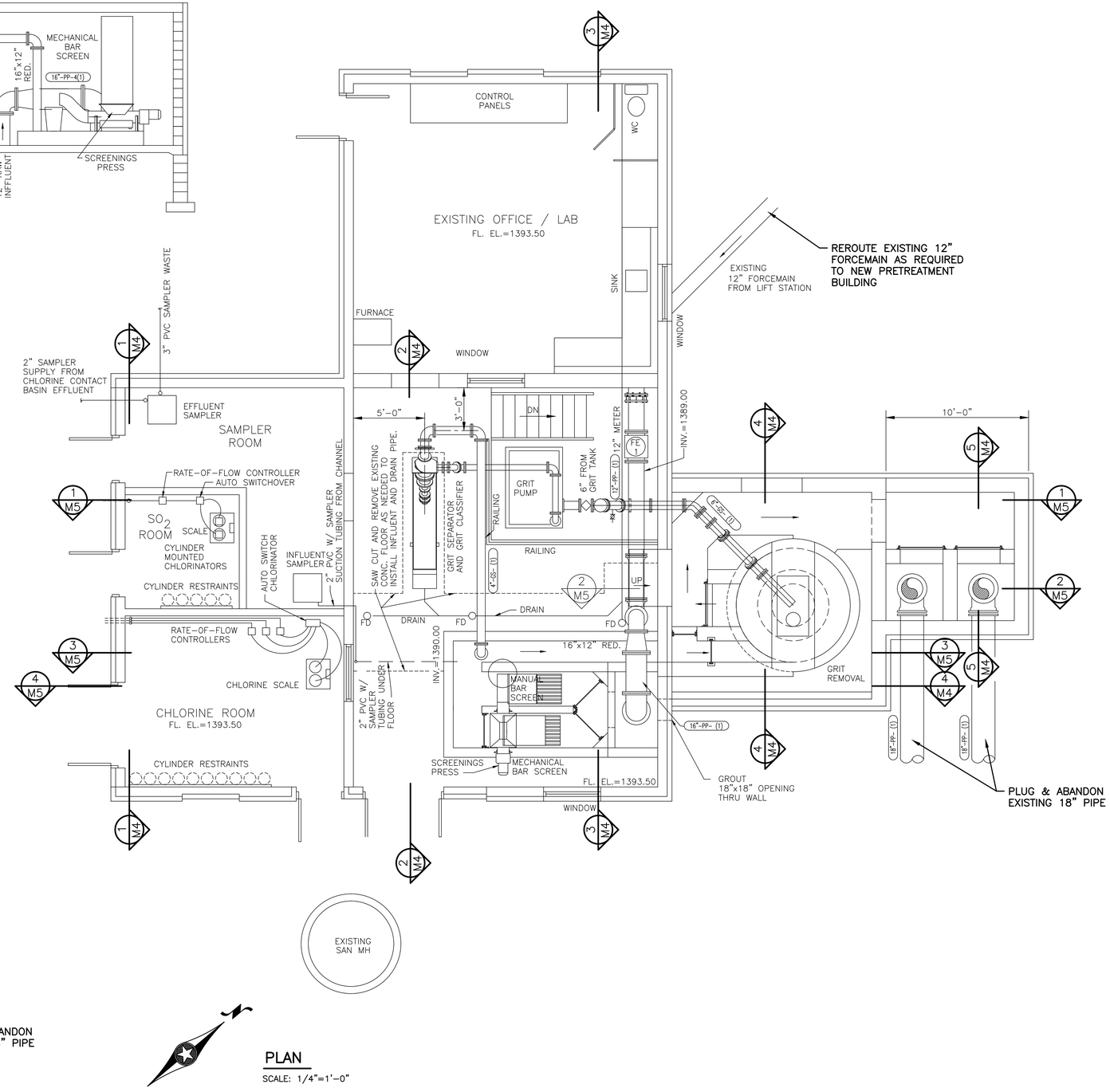

PLAN
SCALE: 1/4"=1'-0"

SCALES SHOWN ON DRAWINGS ARE FOR 24"x36" SIZE SHEETS ONLY. DRAWINGS PLOTTED ON ANY OTHER SIZE SHEETS NEED TO HAVE SCALES ADJUSTED ACCORDINGLY

© Bolton & Menk, Inc. 2017, All Rights Reserved
H:\WIND\T22113672\CAD\ENV\113672_D_BASE_204-DEMOLITION-PLANS.DWG 12/7/2017 6:18:31 PM

I HEREBY CERTIFY THAT THIS PLAN, SPECIFICATION OR REPORT WAS PREPARED BY ME OR UNDER MY DIRECT SUPERVISION, AND THAT I AM A DULY LICENSED PROFESSIONAL ENGINEER UNDER THE LAWS OF THE STATE OF MINNESOTA

SIGNATURE: Tejpal S. Bala TYPED OR PRINTED NAME: Tejpal Singh Bala
DATE 12/4/2017 LIC. NO. 49574

BOLTON & MENK
www.bolton-menk.com

REV.	BY	DATE
A	CAL	12/4/2017

CITY OF WINDOM, MINNESOTA
2017 WASTEWATER TREATMENT FACILITY IMPROVEMENTS
EXISTING PRETREATMENT BUILDING
DEMOLITION PLAN & SECTIONS

SHEET 5.05

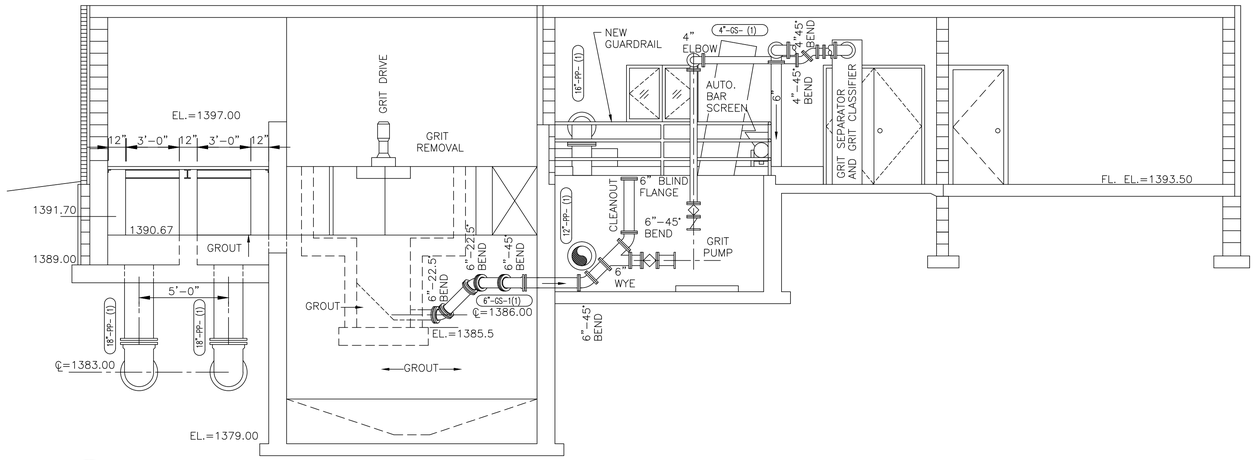

1 M4 SECTION
SCALE: 1/4"=1'-0"

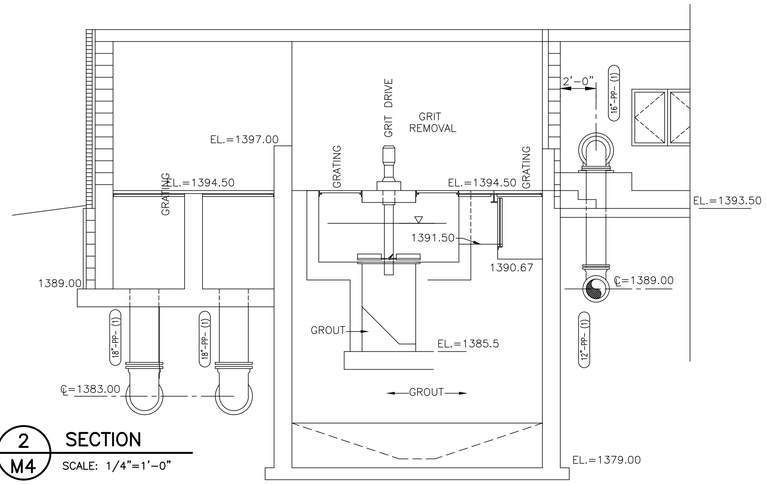

2 M4 SECTION
SCALE: 1/4"=1'-0"

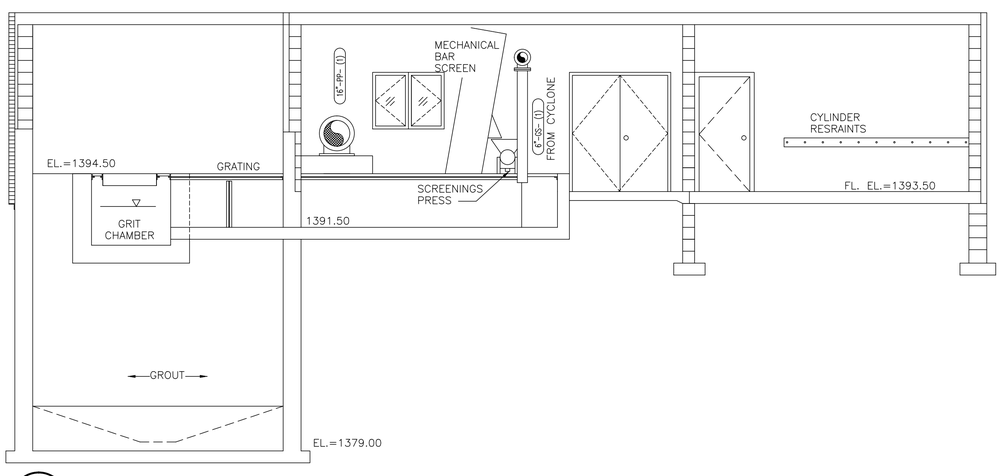

3 M4 SECTION
SCALE: 1/4"=1'-0"

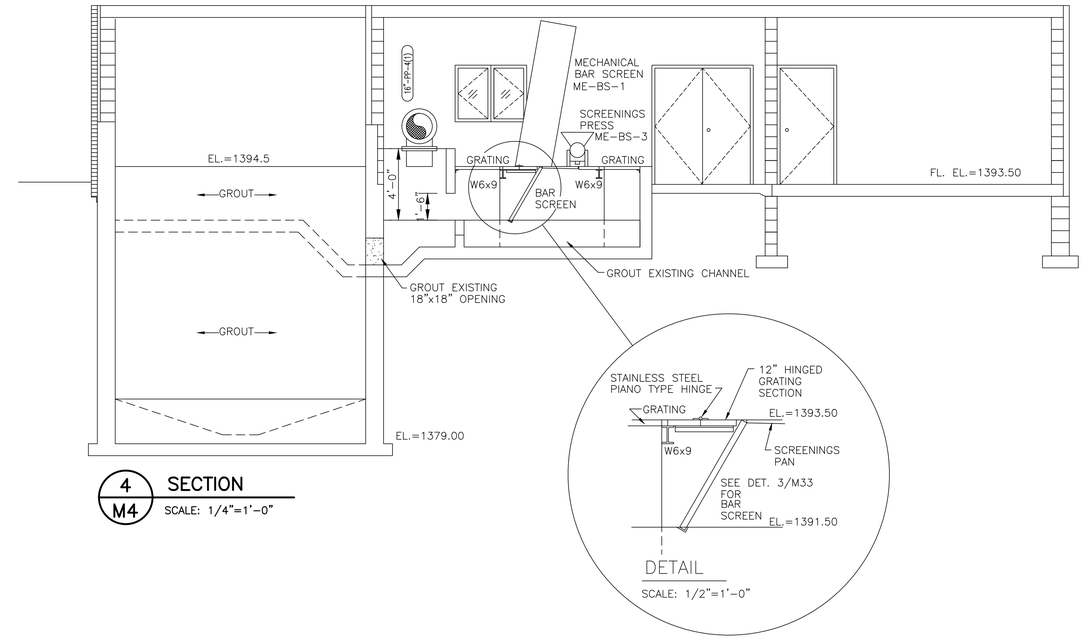

4 M4 SECTION
SCALE: 1/4"=1'-0"

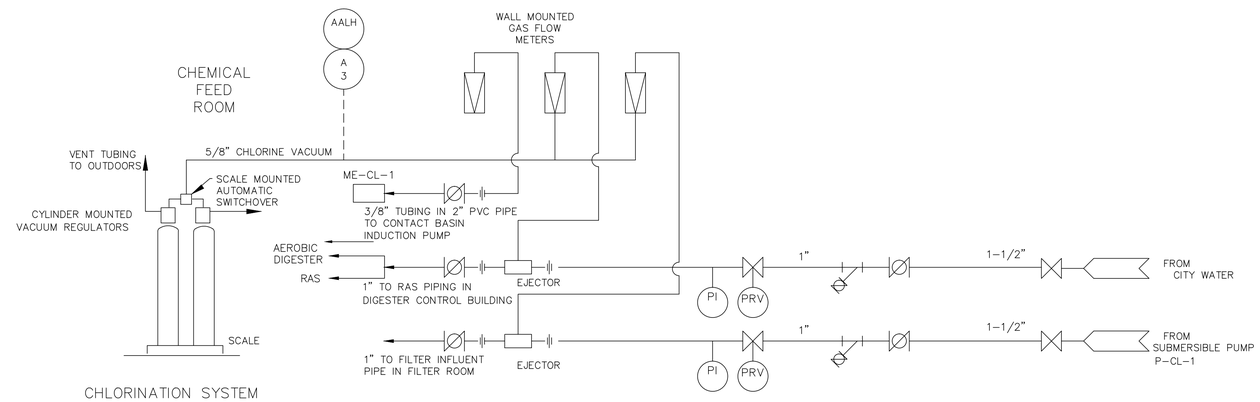

CHLORINATION SYSTEM

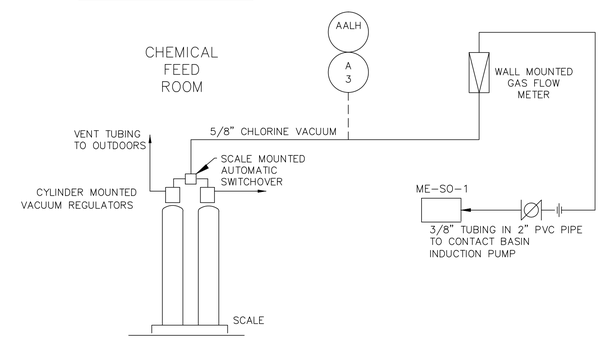

DECHLORINATION SYSTEM

NOTES:
REMOVE & DISPOSE OF ALL CHLORINATION DECHLORINATION PIPING AND APPURTANANCES.

SCALES SHOWN ON DRAWINGS ARE FOR 24"x36" SIZE SHEETS ONLY. DRAWINGS PLOTTED ON ANY OTHER SIZE SHEETS NEED TO HAVE SCALES ADJUSTED ACCORDINGLY

© Bolton & Menk, Inc. 2017, All Rights Reserved
H:\WIND\T22113672\CAD\ENV\113672_D_BASE_204-DEMOLITION-PLANS.DWG 12/7/2017 6:18:31 PM

I HEREBY CERTIFY THAT THIS PLAN, SPECIFICATION OR REPORT WAS PREPARED BY ME OR UNDER MY DIRECT SUPERVISION, AND THAT I AM A DULY LICENSED PROFESSIONAL ENGINEER UNDER THE LAWS OF THE STATE OF MINNESOTA

SIGNATURE: Tejpal S. Bala TYPED OR PRINTED NAME: Tejpal Singh Bala
DATE 12/4/2017 LIC. NO. 49574

BOLTON & MENK
www.bolton-menk.com

REV.	BY	DATE
A	CAL	12/4/2017

CITY OF WINDOM, MINNESOTA
2017 WASTEWATER TREATMENT FACILITY IMPROVEMENTS
EXISTING PRETREATMENT BUILDING DEMOLITION SECTIONS

SHEET 5.06

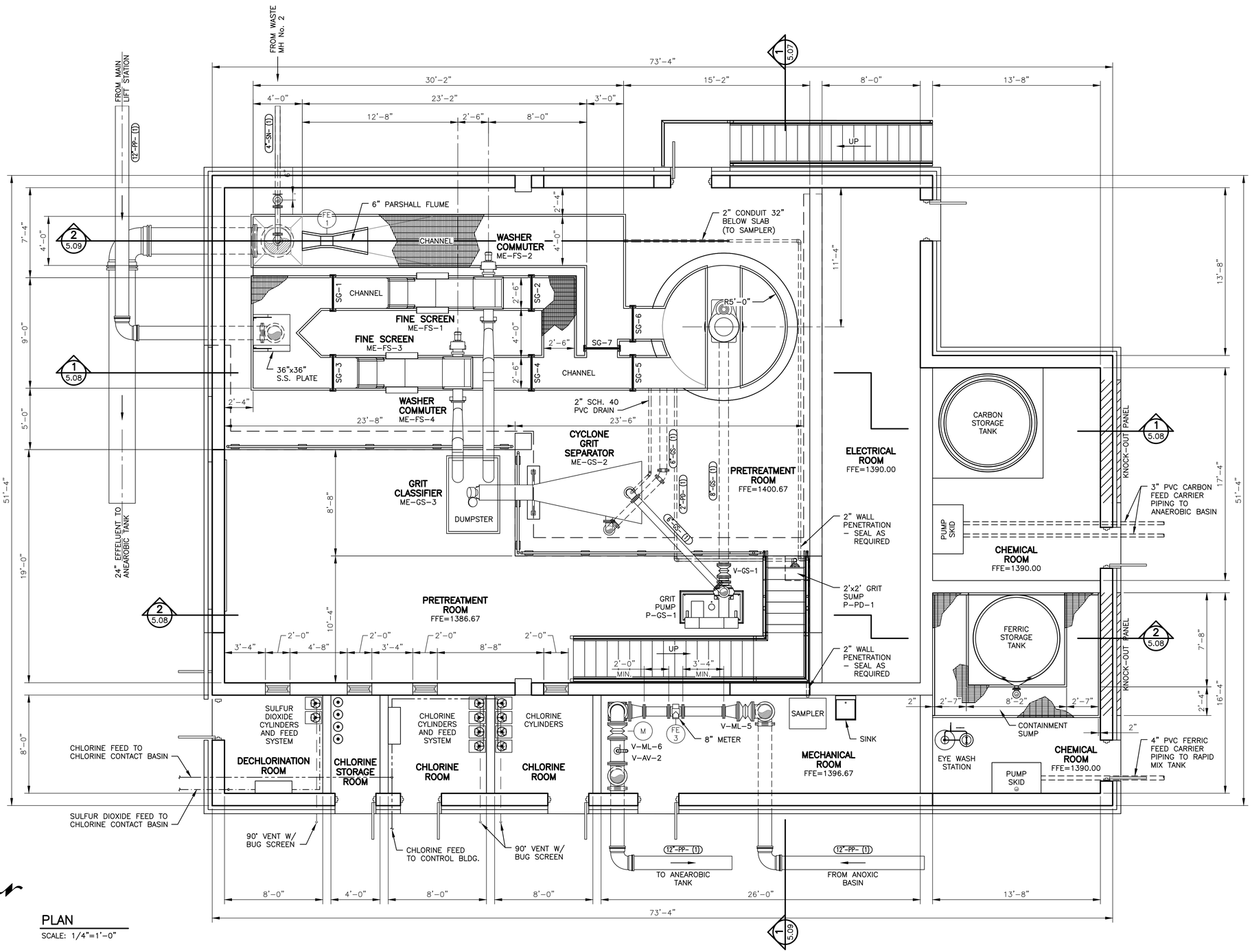

PLAN

SCALE: 1/4"=1'-0"

SCALES SHOWN ON DRAWINGS ARE FOR 24"x36" SIZE SHEETS ONLY. DRAWINGS PLOTTED ON ANY OTHER SIZE SHEETS NEED TO HAVE SCALES ADJUSTED ACCORDINGLY

© Bolton & Menk, Inc. 2017, All Rights Reserved
H:\WIND\T22113672\CAD\ENV\Plant 3D\Windom WWTF\Windom WWTF\Orthos\DWGs\Pretreatment Building_Plan Sheet.dwg 12/7/2017 5:57 PM

I HEREBY CERTIFY THAT THIS PLAN, SPECIFICATION OR REPORT WAS PREPARED BY ME OR UNDER MY DIRECT SUPERVISION, AND THAT I AM A DULY LICENSED PROFESSIONAL ENGINEER UNDER THE LAWS OF THE STATE OF MINNESOTA

SIGNATURE: Tejpal S. Bala TYPED OR PRINTED NAME: Tejpal Singh Bala

DATE 12/4/2017 LIC. NO. 49574

BOLTON & MENK

www.bolton-menk.com

REV.	BY	DATE
A	CAL	12/4/2017

CITY OF WINDOM, MINNESOTA

2017 WASTEWATER TREATMENT FACILITY IMPROVEMENTS

PRETREATMENT BUILIDING PLAN

SHEET 5.07

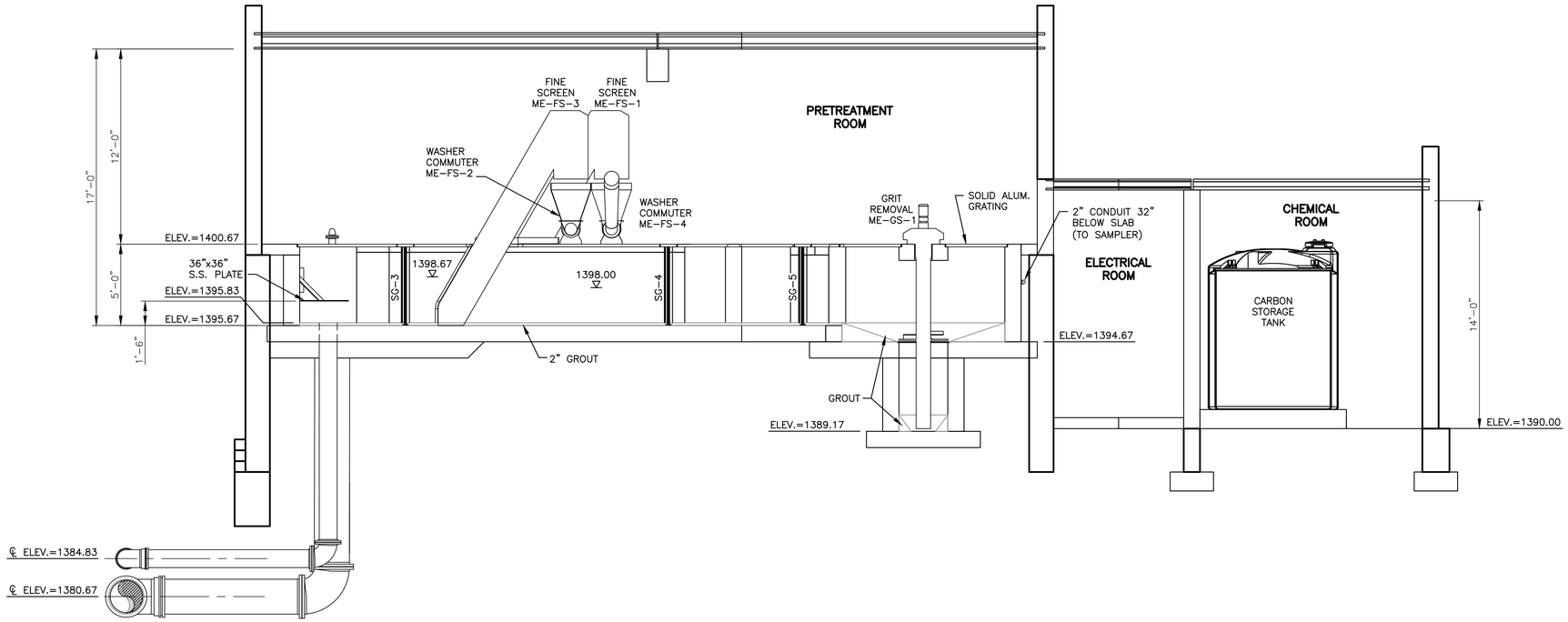

1 / 5.07 SECTION
SCALE: 1/4"=1'-0"

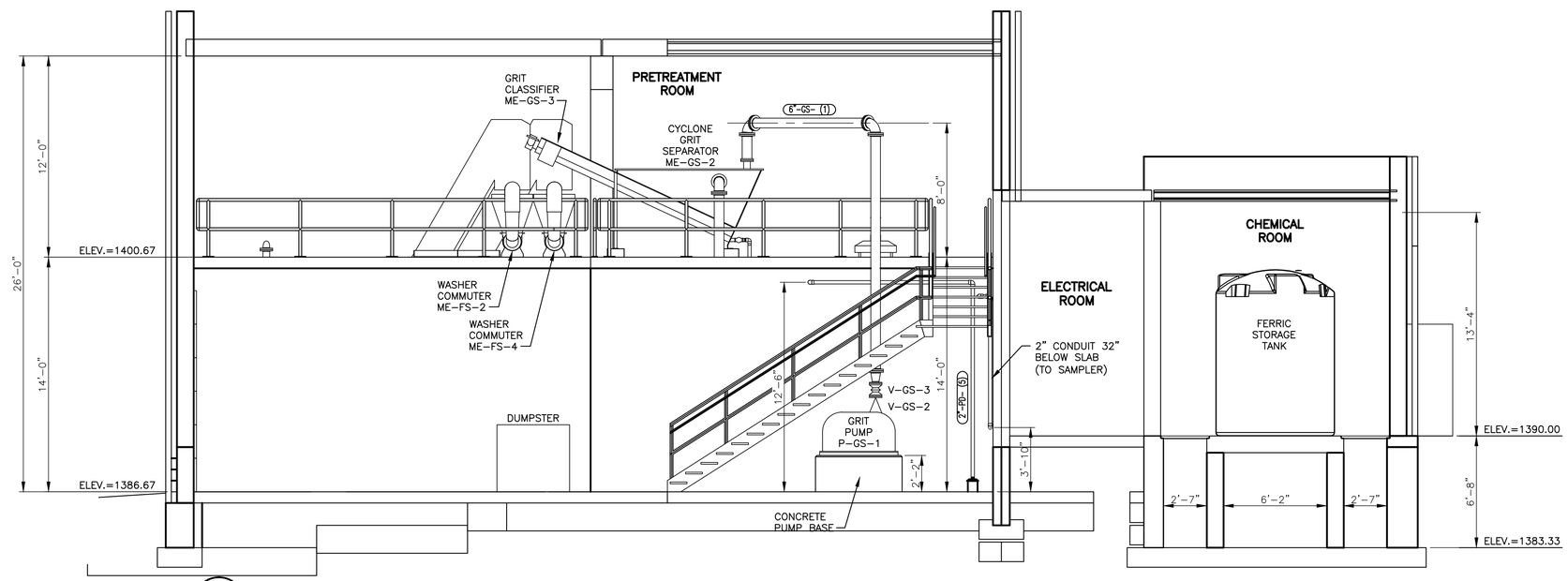

2 / 5.07 SECTION
SCALE: 1/4"=1'-0"

SCALES SHOWN ON DRAWINGS ARE FOR 24"x36" SIZE SHEETS ONLY. DRAWINGS PLOTTED ON ANY OTHER SIZE SHEETS NEED TO HAVE SCALES ADJUSTED ACCORDINGLY

© Bolton & Menk, Inc. 2017, All Rights Reserved
H:\WIND\T22113672\CAD\ENV\Plant 3D\Windom WWTF\Windom WWTF\Orthos\DWGs\Pretreatment Building_Section Sheet1.dwg 12/7/2017 2:53 PM

I HEREBY CERTIFY THAT THIS PLAN, SPECIFICATION OR REPORT WAS PREPARED BY ME OR UNDER MY DIRECT SUPERVISION, AND THAT I AM A DULY LICENSED PROFESSIONAL ENGINEER UNDER THE LAWS OF THE STATE OF MINNESOTA

SIGNATURE: Tejpal S. Bala TYPED OR PRINTED NAME: Tejpal Singh Bala
DATE 12/4/2017 LIC. NO. 49574

BOLTON & MENK
www.bolton-menk.com

REV.	BY	DATE
A	CAL	12/4/2017

CITY OF WINDOM, MINNESOTA
2017 WASTEWATER TREATMENT FACILITY IMPROVEMENTS
PRETREATMENT BUILDING SECTIONS

SHEET 5.08

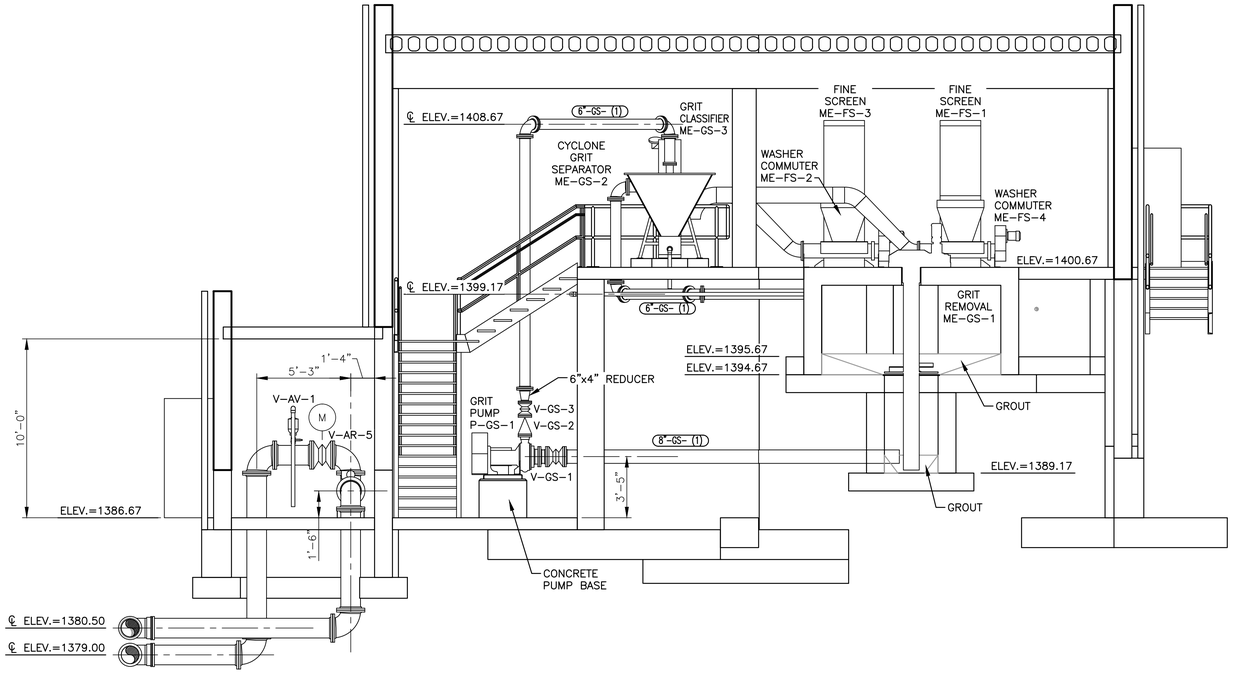

1 / 5.07 SECTION
SCALE: 1/4"=1'-0"

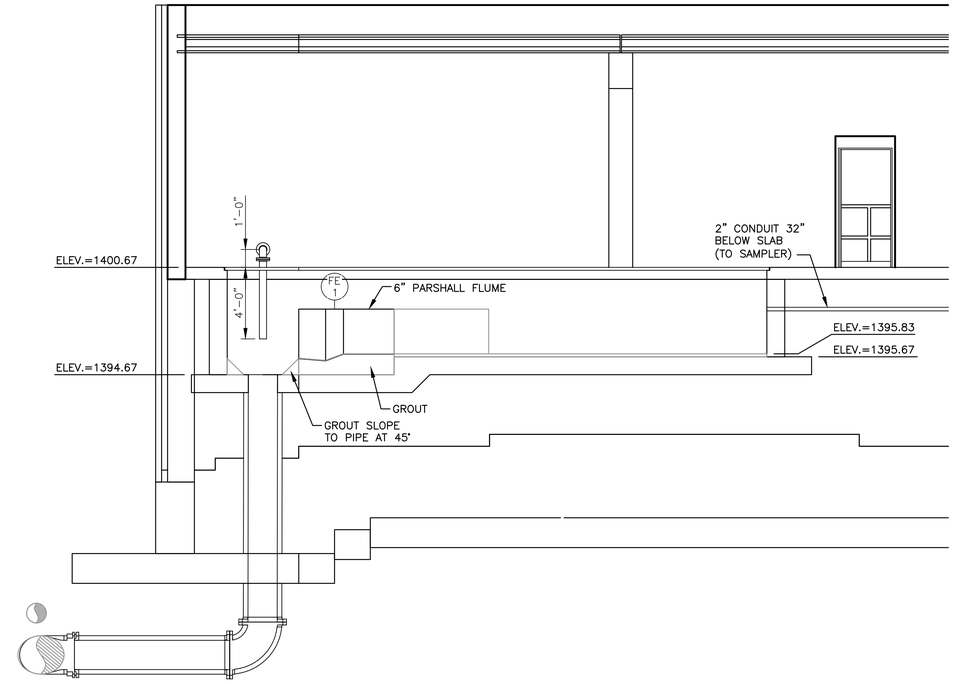

2 / 5.07 SECTION
SCALE: 1/4"=1'-0"

SCALES SHOWN ON DRAWINGS ARE FOR 24"x36" SIZE SHEETS ONLY. DRAWINGS PLOTTED ON ANY OTHER SIZE SHEETS NEED TO HAVE SCALES ADJUSTED ACCORDINGLY

© Bolton & Menk, Inc. 2017, All Rights Reserved
H:\WIND\T22113672\CAD\ENV\Plant 3D\Windom WWTF\Windom WWTF\Orthos\DWGs\Pretreatment Building_Section Sheet2.dwg 12/7/2017 2:52 PM

I HEREBY CERTIFY THAT THIS PLAN, SPECIFICATION OR REPORT WAS PREPARED BY ME OR UNDER MY DIRECT SUPERVISION, AND THAT I AM A DULY LICENSED PROFESSIONAL ENGINEER UNDER THE LAWS OF THE STATE OF MINNESOTA

SIGNATURE: Tejpal S. Bala TYPED OR PRINTED NAME: Tejpal Singh Bala

DATE 12/4/2017 LIC. NO. 49574

BOLTON & MENK

www.bolton-menk.com

REV.	BY	DATE
A	CAL	12/4/2017

CITY OF WINDOM, MINNESOTA

2017 WASTEWATER TREATMENT FACILITY IMPROVEMENTS

PRETREATMENT BUILDING
SECTIONS

SHEET 5.09

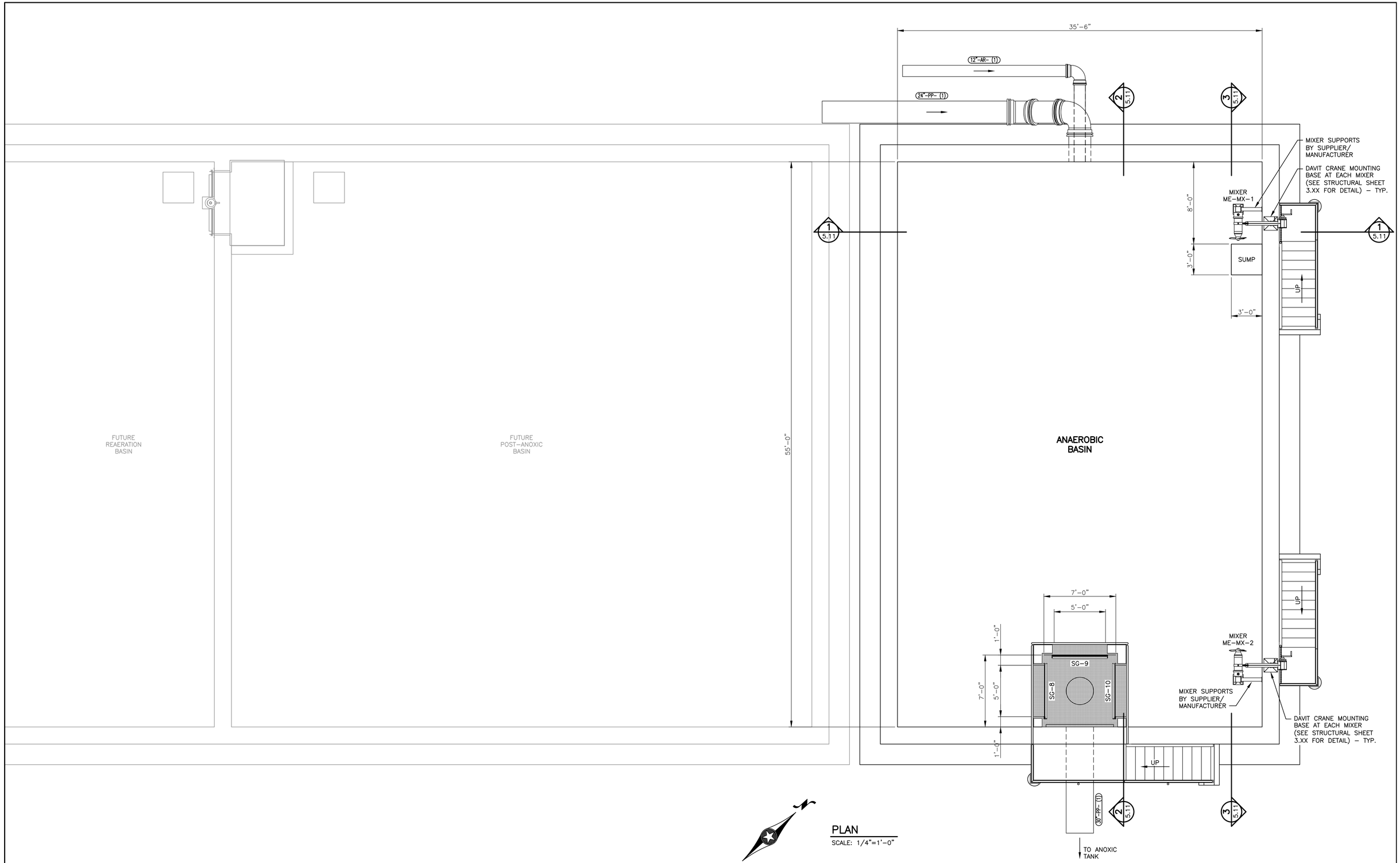

PLAN

SCALE: 1/4"=1'-0"

SCALES SHOWN ON DRAWINGS ARE FOR 24"x36" SIZE SHEETS ONLY. DRAWINGS PLOTTED ON ANY OTHER SIZE SHEETS NEED TO HAVE SCALES ADJUSTED ACCORDINGLY

© Bolton & Menk, Inc. 2017, All Rights Reserved
H:\WIND\T22113672\CAD\ENV\Plant 3D\Windom WWTF\Windom WWTF\Orthos\DWGs\Anaerobic Basin_Plan Sheet.dwg 12/7/2017 3:22 PM

I HEREBY CERTIFY THAT THIS PLAN, SPECIFICATION OR REPORT WAS PREPARED BY ME OR UNDER MY DIRECT SUPERVISION, AND THAT I AM A DULY LICENSED PROFESSIONAL ENGINEER UNDER THE LAWS OF THE STATE OF MINNESOTA

SIGNATURE: Tejpal S. Bala TYPED OR PRINTED NAME: Tejpal Singh Bala

DATE 12/4/2017 LIC. NO. 49574

BOLTON & MENK

www.bolton-menk.com

REV.	BY	DATE
A	CAL	12/4/2017

CITY OF WINDOM, MINNESOTA

2017 WASTEWATER TREATMENT FACILITY IMPROVEMENTS

ANAEROBIC BASIN
PLAN

SHEET 5.10

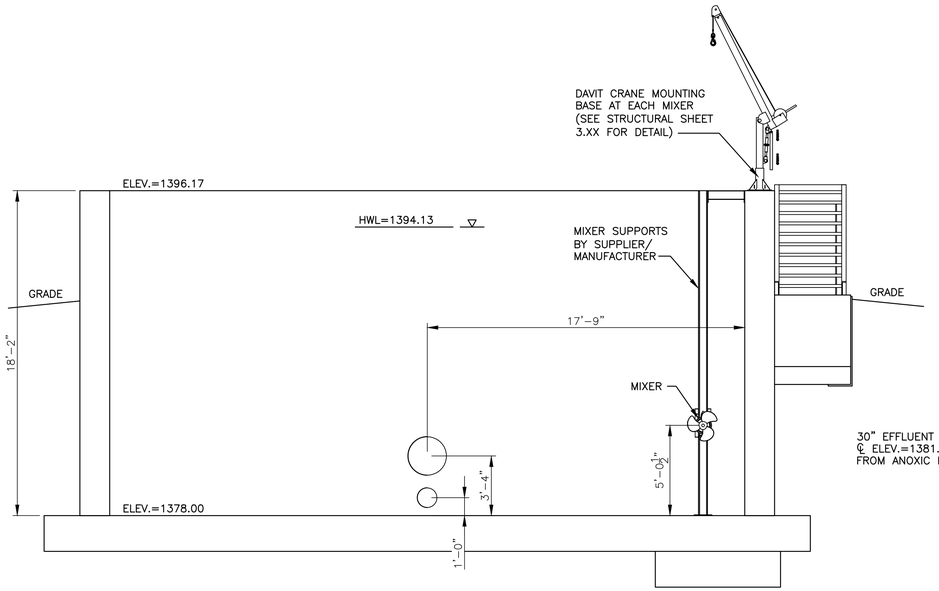

1 / 5.10 SECTION
SCALE: 1/4"=1'-0"

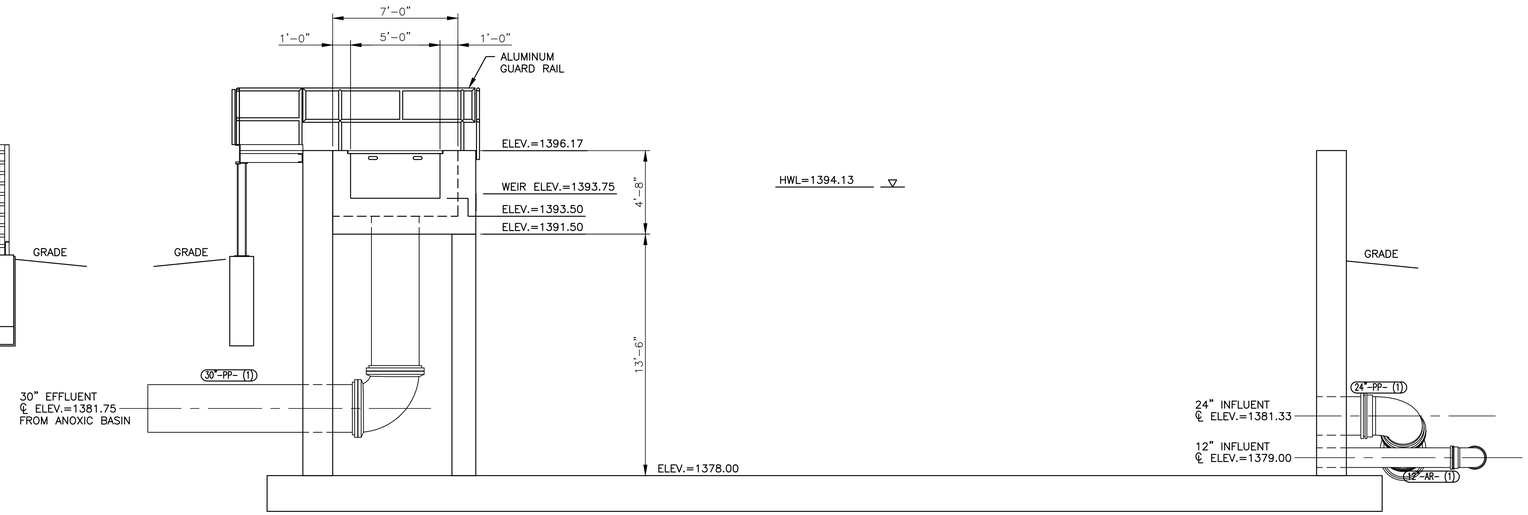

2 / 5.10 SECTION
SCALE: 1/4"=1'-0"

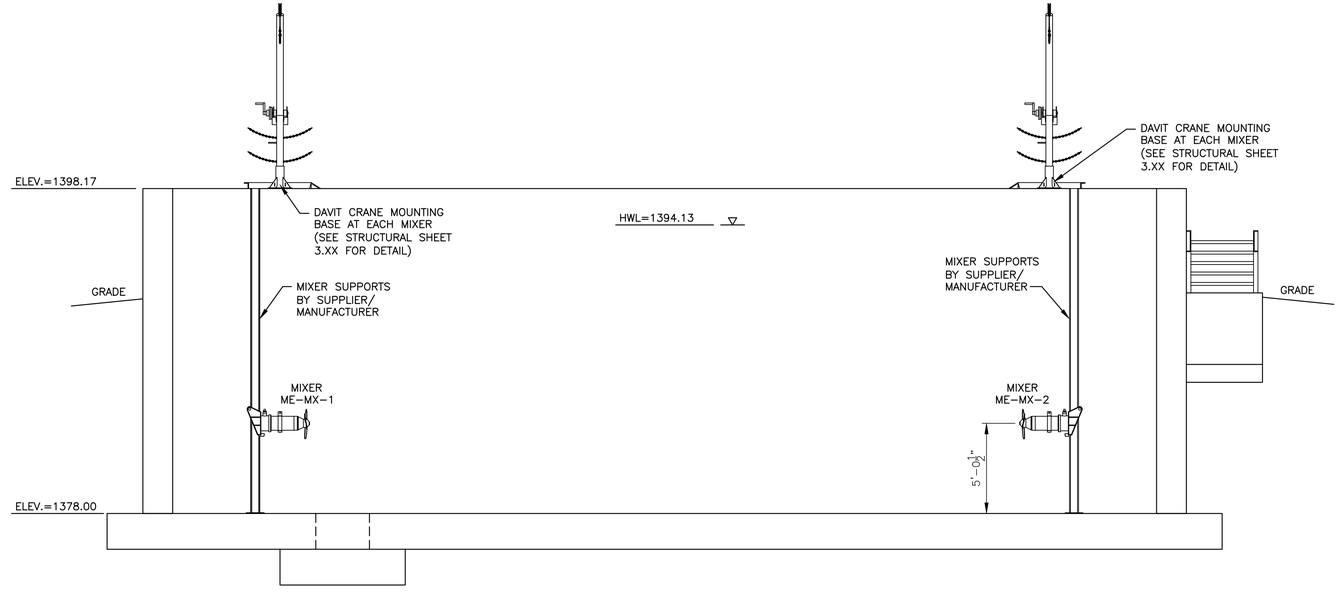

3 / 5.10 SECTION
SCALE: 1/4"=1'-0"

SCALES SHOWN ON DRAWINGS ARE FOR 24"x36" SIZE SHEETS ONLY. DRAWINGS PLOTTED ON ANY OTHER SIZE SHEETS NEED TO HAVE SCALES ADJUSTED ACCORDINGLY

© Bolton & Menk, Inc. 2017, All Rights Reserved
H:\WIND\T22113672\CAD\ENV\Plant 3D\Windom WWTF\Windom WWTF\Orthos\DWGs\Anaerobic Basin_Section Sheet.dwg 12/7/2017 3:21 PM

I HEREBY CERTIFY THAT THIS PLAN, SPECIFICATION OR REPORT WAS PREPARED BY ME OR UNDER MY DIRECT SUPERVISION, AND THAT I AM A DULY LICENSED PROFESSIONAL ENGINEER UNDER THE LAWS OF THE STATE OF MINNESOTA

SIGNATURE: Tejpal S. Bala TYPED OR PRINTED NAME: Tejpal Singh Bala
DATE 12/4/2017 LIC. NO. 49574

BOLTON & MENK
www.bolton-menk.com

REV.	BY	DATE
A	CAL	12/4/2017

CITY OF WINDOM, MINNESOTA
2017 WASTEWATER TREATMENT FACILITY IMPROVEMENTS
ANAEROBIC BASIN
SECTIONS

SHEET 5.11

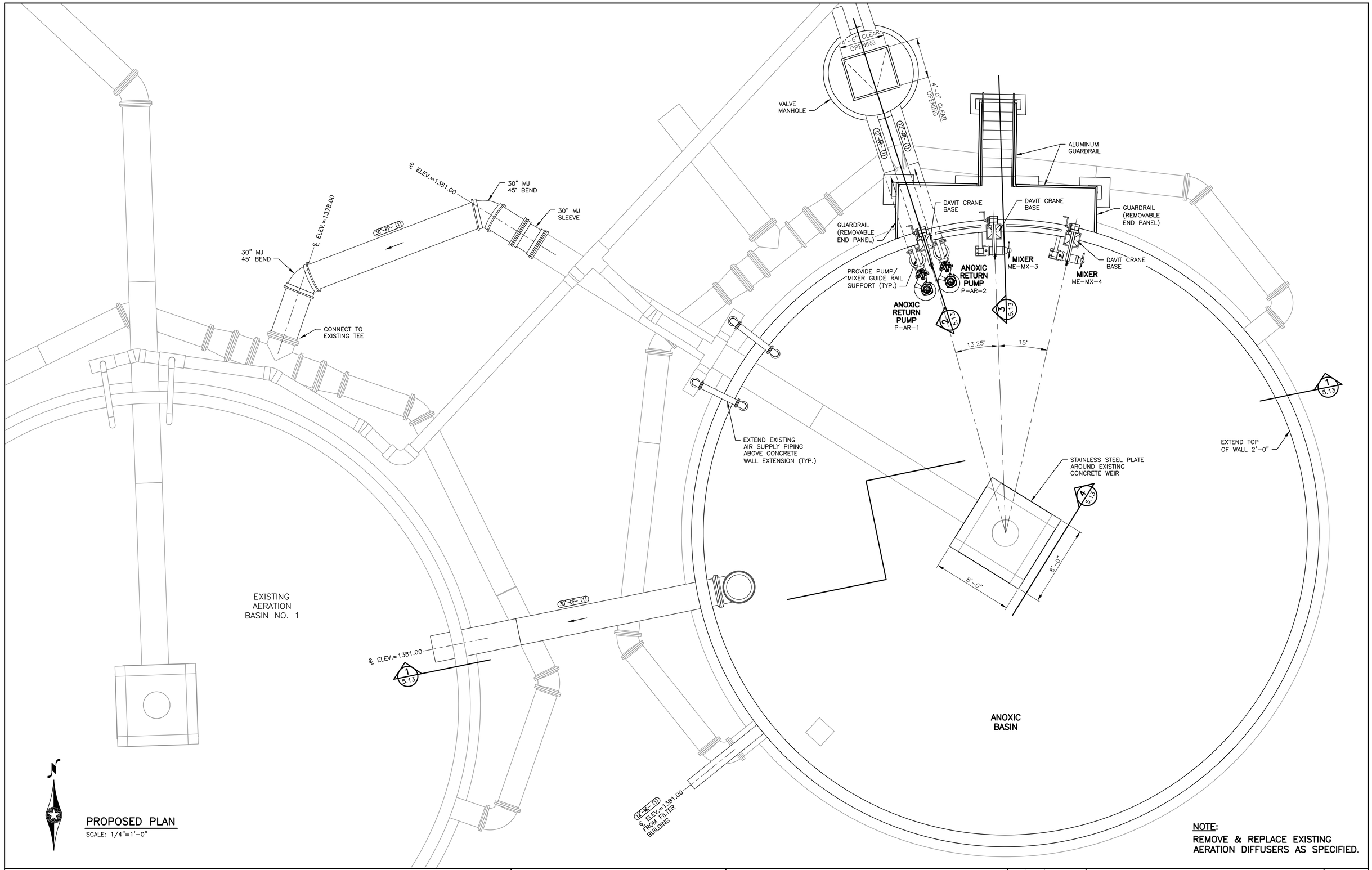

PROPOSED PLAN

SCALE: 1/4"=1'-0"

NOTE:
REMOVE & REPLACE EXISTING AERATION DIFFUSERS AS SPECIFIED.

SCALES SHOWN ON DRAWINGS ARE FOR 24"x36" SIZE SHEETS ONLY. DRAWINGS PLOTTED ON ANY OTHER SIZE SHEETS NEED TO HAVE SCALES ADJUSTED ACCORDINGLY

© Bolton & Menk, Inc. 2017, All Rights Reserved
H:\WIND\T22113672\CAD\ENV\Plant 3D\Windom WWTF\Windom WWTF\Orthos\DWGs\Anoxic Basin_Plan Sheet.dwg 12/7/2017 3:26 PM

I HEREBY CERTIFY THAT THIS PLAN, SPECIFICATION OR REPORT WAS PREPARED BY ME OR UNDER MY DIRECT SUPERVISION, AND THAT I AM A DULY LICENSED PROFESSIONAL ENGINEER UNDER THE LAWS OF THE STATE OF MINNESOTA

SIGNATURE: Tejpal S. Bala TYPED OR PRINTED NAME: Tejpal Singh Bala
DATE 12/4/2017 LIC. NO. 49574

BOLTON & MENK
www.bolton-menk.com

REV.	BY	DATE
A	CAL	12/4/2017

CITY OF WINDOM, MINNESOTA
2017 WASTEWATER TREATMENT FACILITY IMPROVEMENTS
EXISTING AERATION BASIN No. 1
REPURPOSED TO ANOXIC BASIN

SHEET 5.12

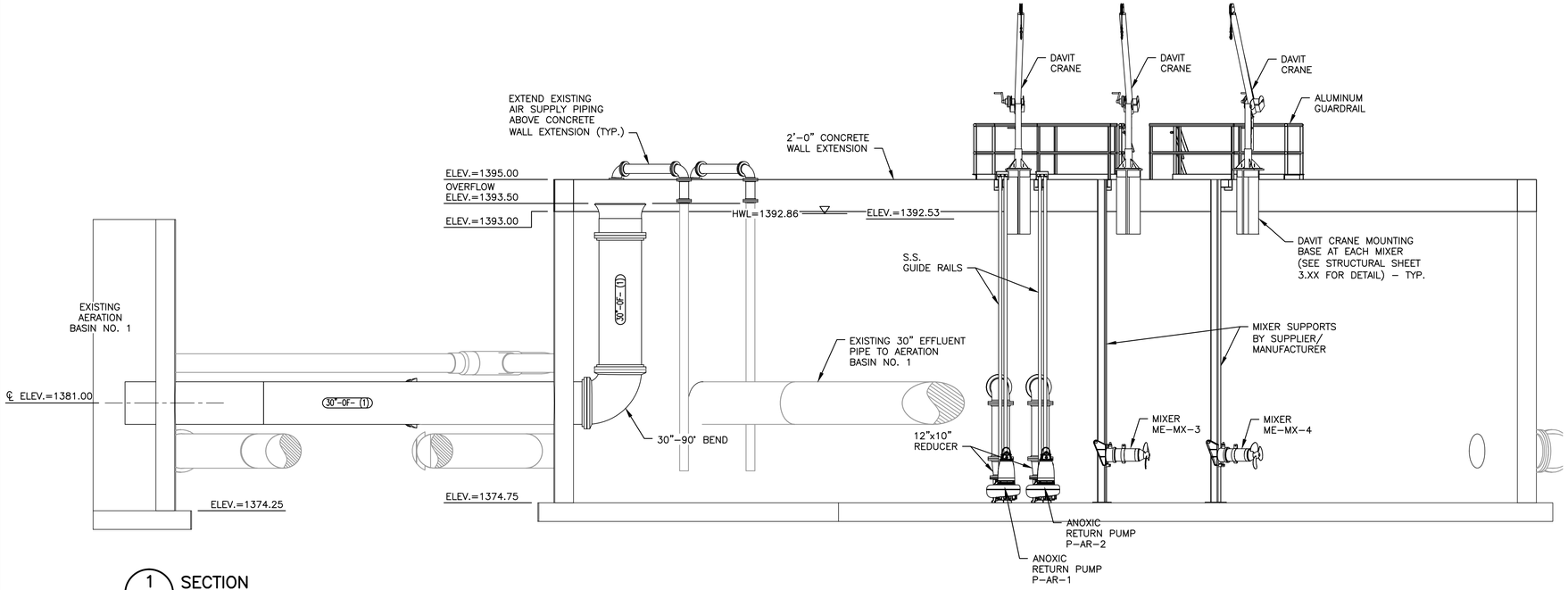

1 / 5.12 SECTION
SCALE: 1/4"=1'-0"

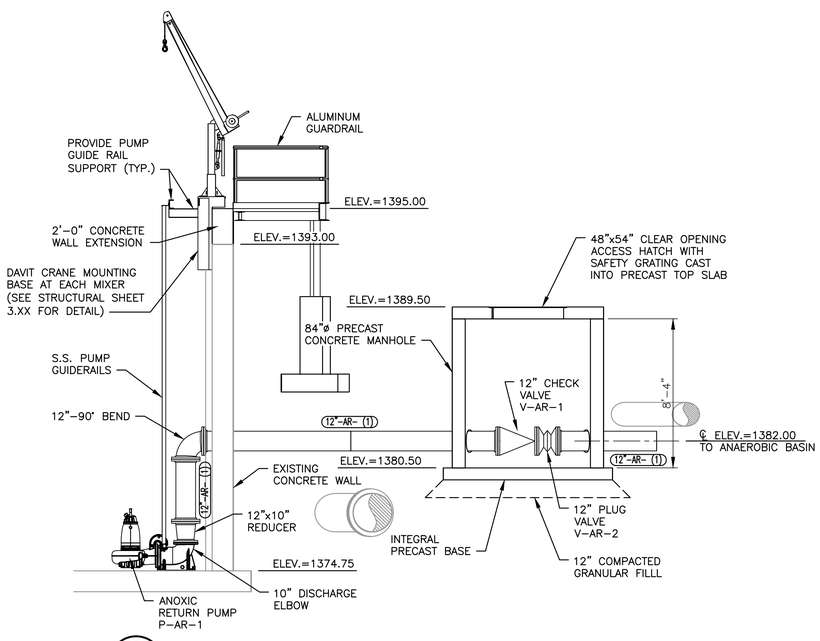

2 / 5.12 SECTION
SCALE: 1/4"=1'-0"

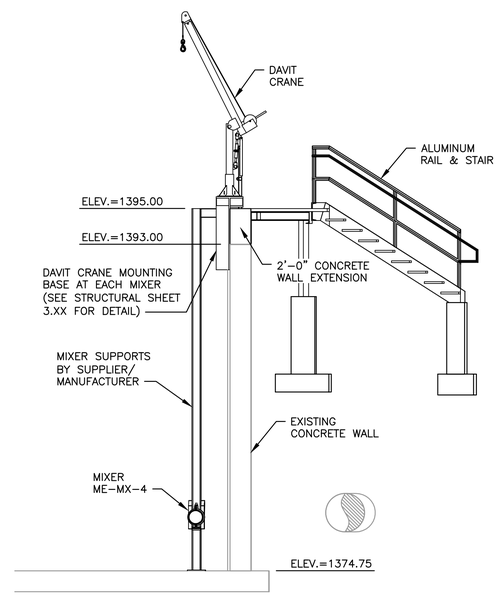

3 / 5.12 SECTION
SCALE: 1/4"=1'-0"

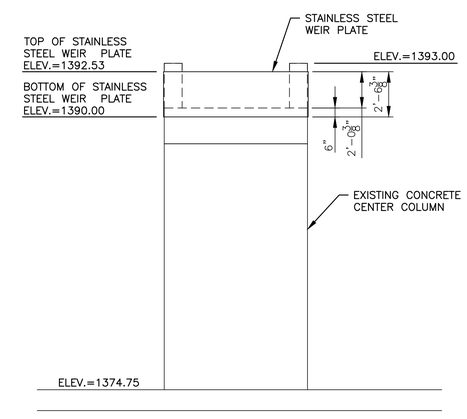

4 / 5.12 SECTION
SCALE: 1/4"=1'-0"

SCALES SHOWN ON DRAWINGS ARE FOR 24"x36" SIZE SHEETS ONLY. DRAWINGS PLOTTED ON ANY OTHER SIZE SHEETS NEED TO HAVE SCALES ADJUSTED ACCORDINGLY

© Bolton & Menk, Inc. 2017, All Rights Reserved
H:\WIND\T221113672\CAD\ENV\Plant 3D\Windom WWTF\Windom WWTF\Orthos\DWGs\Anoxic Basin_Section Sheet.dwg 12/7/2017 5:58 PM

I HEREBY CERTIFY THAT THIS PLAN, SPECIFICATION OR REPORT WAS PREPARED BY ME OR UNDER MY DIRECT SUPERVISION, AND THAT I AM A DULY LICENSED PROFESSIONAL ENGINEER UNDER THE LAWS OF THE STATE OF MINNESOTA

SIGNATURE: Tejpal S. Bala TYPED OR PRINTED NAME: Tejpal Singh Bala
DATE 12/4/2017 LIC. NO. 49574

BOLTON & MENK
www.bolton-menk.com

REV.	BY	DATE
A	CAL	12/4/2017

CITY OF WINDOM, MINNESOTA
2017 WASTEWATER TREATMENT FACILITY IMPROVEMENTS
ANOXIC BASIN
SECTIONS

SHEET 5.13

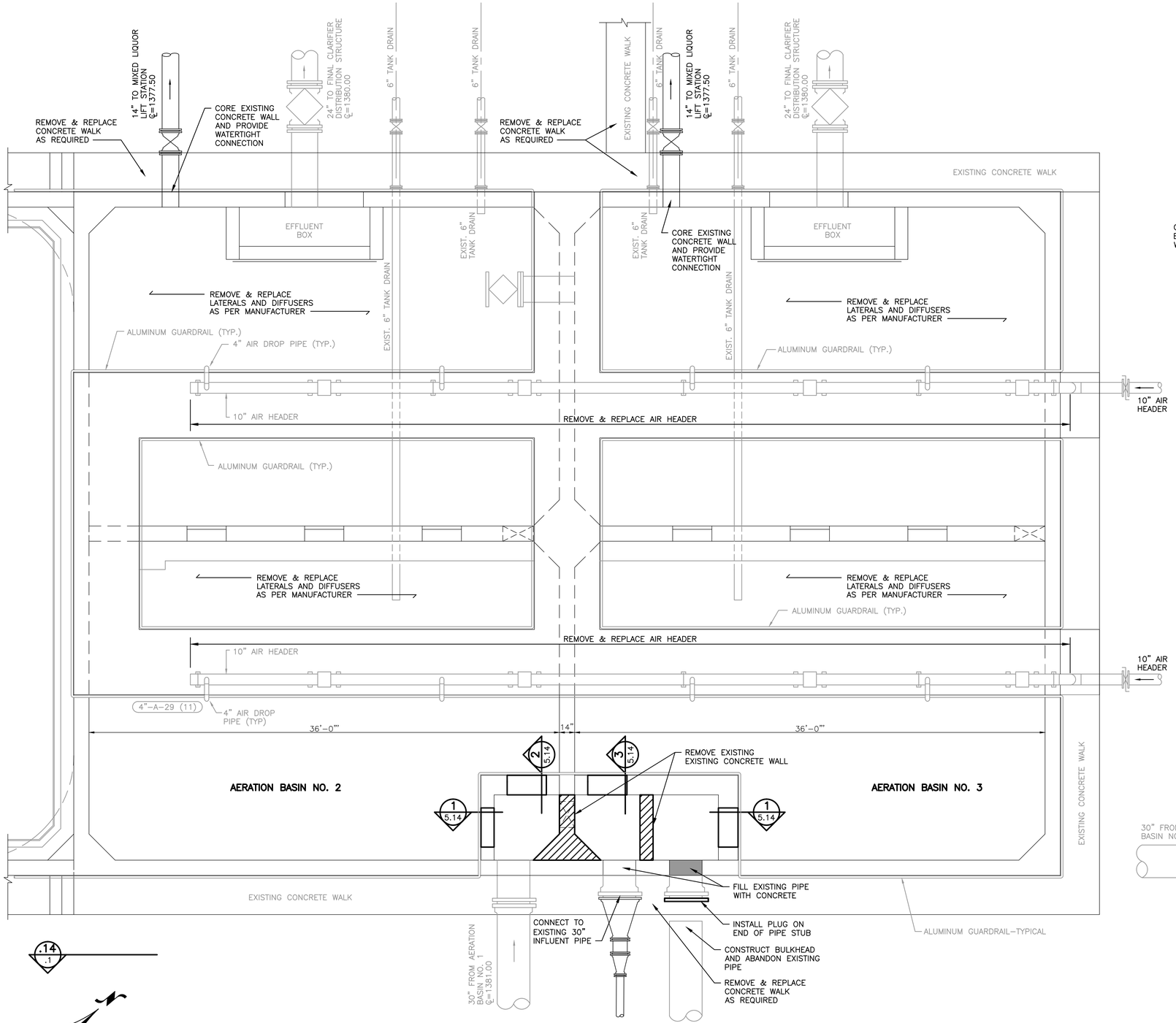

MODIFICATIONS TO EXISTING RECTANGULAR AERATION BASINS

SCALE: 1/4"=1'-0"

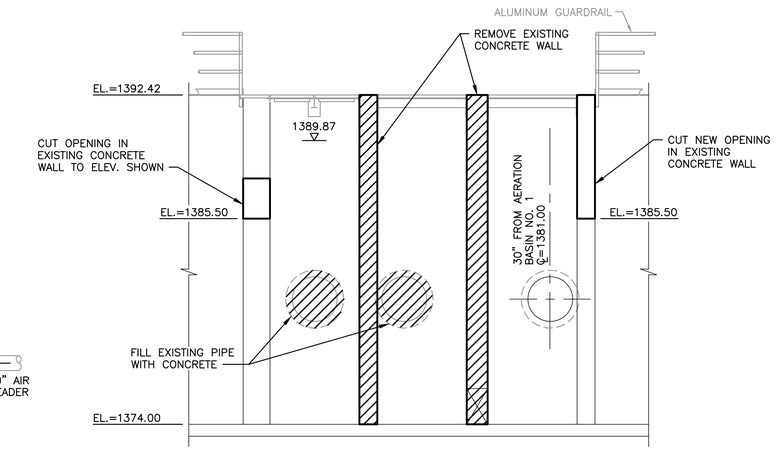

1 / 5.14 SECTION
SCALE: 1/4"=1'-0"

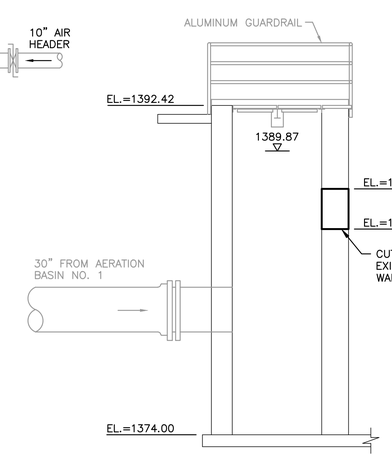

2 / 5.14 SECTION
SCALE: 1/4"=1'-0"

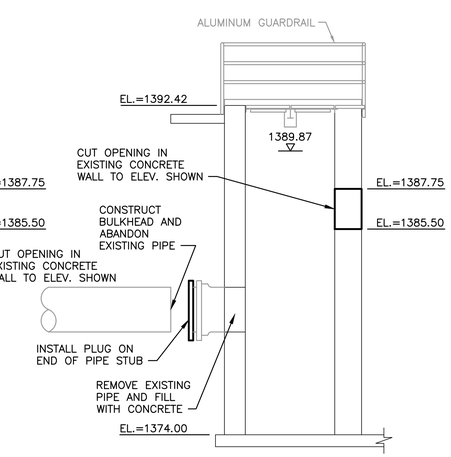

3 / 5.14 SECTION
SCALE: 1/4"=1'-0"

SCALES SHOWN ON DRAWINGS ARE FOR 24"x36" SIZE SHEETS ONLY. DRAWINGS PLOTTED ON ANY OTHER SIZE SHEETS NEED TO HAVE SCALES ADJUSTED ACCORDINGLY

© Bolton & Menk, Inc. 2017, All Rights Reserved
H:\WIND\T22113672\CAD\ENV\113672_D_BASE_AERATION-BASIN-MOD.DWG 12/7/2017 3:28:42 PM

0 1 2 3 4 6 8 12
Graphic Scale for 1/4"=1'-0"

I HEREBY CERTIFY THAT THIS PLAN, SPECIFICATION OR REPORT WAS PREPARED BY ME OR UNDER MY DIRECT SUPERVISION, AND THAT I AM A DULY LICENSED PROFESSIONAL ENGINEER UNDER THE LAWS OF THE STATE OF MINNESOTA

SIGNATURE: Tejpal S. Bala TYPED OR PRINTED NAME: Tejpal Singh Bala
DATE 12/4/2017 LIC. NO. 49574

BOLTON & MENK
www.bolton-menk.com

REV.	BY	DATE
A	CAL	12/4/2017

CITY OF WINDOM, MINNESOTA
2017 WASTEWATER TREATMENT FACILITY IMPROVEMENTS
EXISTING AERATION BASINS No. 2 & No. 3
PROPOSED MODIFICATIONS

SHEET 5.14

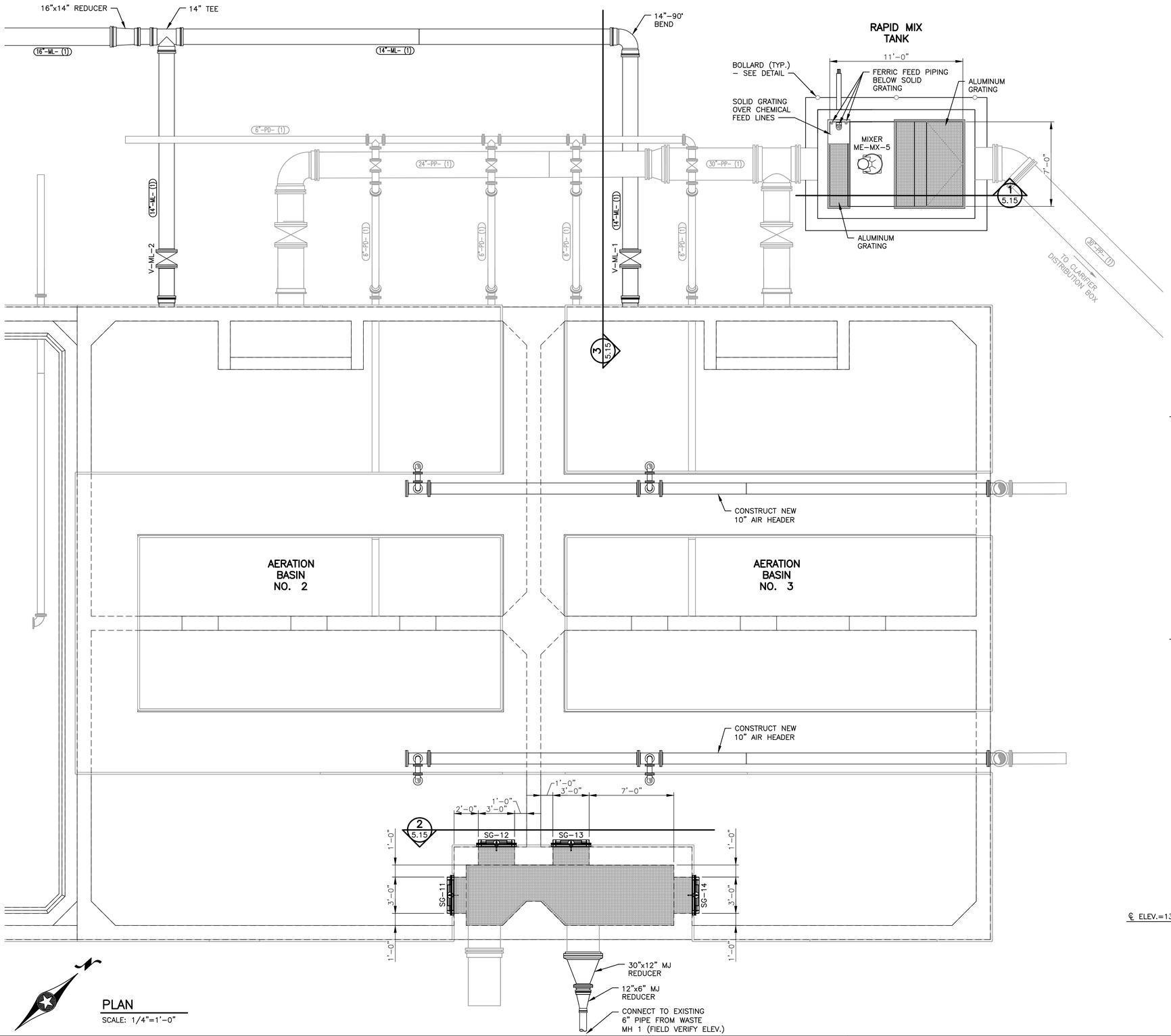

PLAN
SCALE: 1/4"=1'-0"

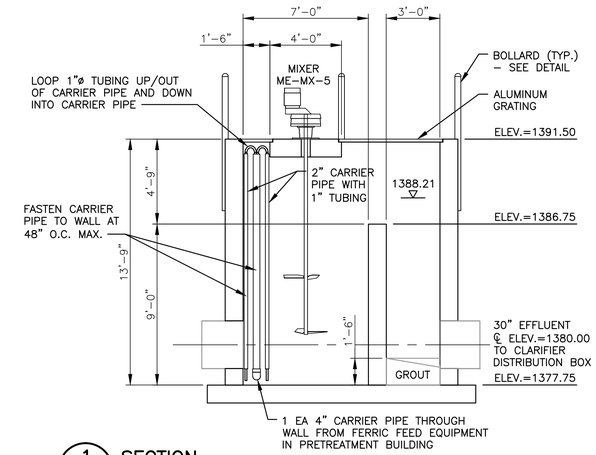

1/5.15 SECTION
SCALE: 1/4"=1'-0"

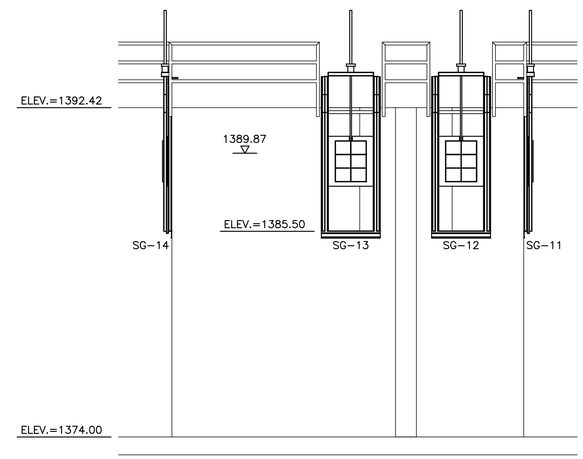

2/5.15 SECTION
SCALE: 1/4"=1'-0"

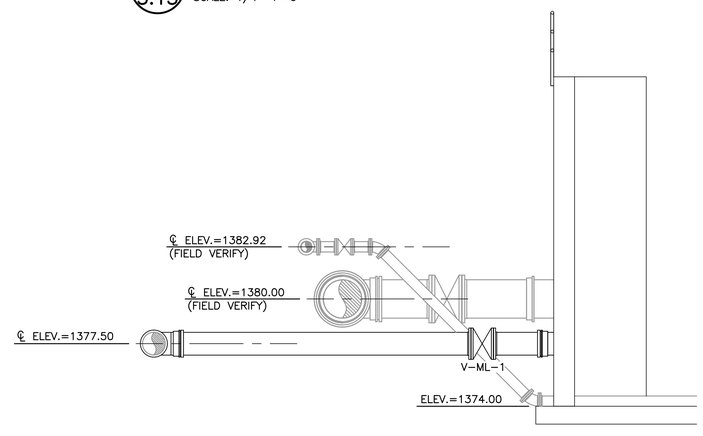

3/5.15 SECTION
SCALE: 1/4"=1'-0"

SCALES SHOWN ON DRAWINGS ARE FOR 24"x36" SIZE SHEETS ONLY. DRAWINGS PLOTTED ON ANY OTHER SIZE SHEETS NEED TO HAVE SCALES ADJUSTED ACCORDINGLY

0 1 2 3 4 6 8 12
Graphic Scale for 1/4"=1'-0"

© Bolton & Menk, Inc. 2017, All Rights Reserved
H:\WIND\T22113672\CAD\ENV\Plant 3D\Windom WWTF\Windom WWTF\Orthos\DWGs\Aeration Basins_Plan Sheet.dwg 12/7/2017 5:59 PM

I HEREBY CERTIFY THAT THIS PLAN, SPECIFICATION OR REPORT WAS PREPARED BY ME OR UNDER MY DIRECT SUPERVISION, AND THAT I AM A DULY LICENSED PROFESSIONAL ENGINEER UNDER THE LAWS OF THE STATE OF MINNESOTA

SIGNATURE: Tejpal S. Bala TYPED OR PRINTED NAME: Tejpal Singh Bala
DATE 12/4/2017 LIC. NO. 49574

BOLTON & MENK
www.bolton-menk.com

REV.	BY	DATE
A	CAL	12/4/2017

CITY OF WINDOM, MINNESOTA
2017 WASTEWATER TREATMENT FACILITY IMPROVEMENTS
AERATION BASINS NO. 2 & NO. 3 MODIFICATIONS
RAPID MIX TANK – PLAN & SECTION

SHEET 5.15

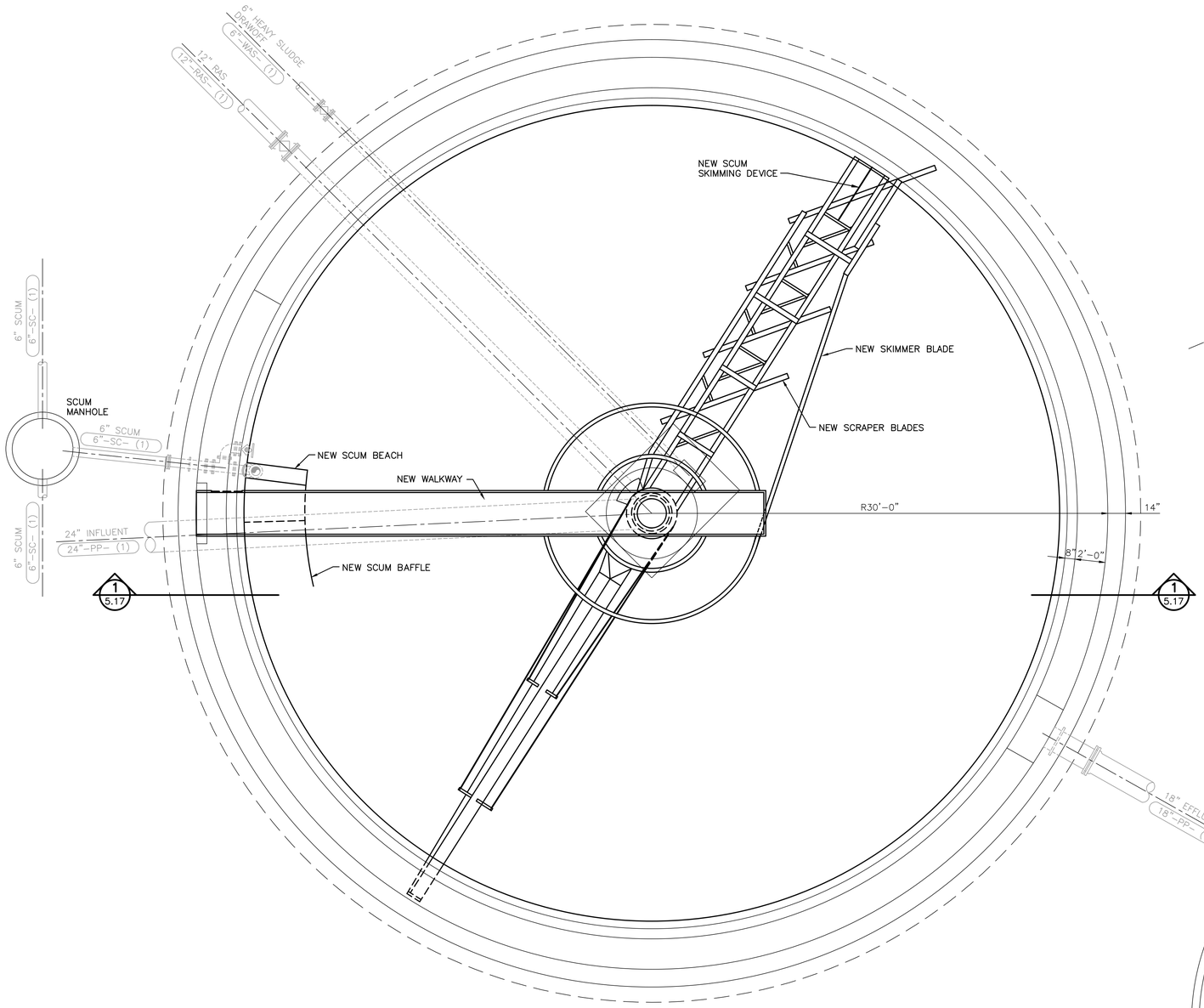

PLAN – TYPICAL

SCALE: 1/4"=1'-0"

NOTES:

1. FINAL CLARIFIER NO. 1 AND NO. 2 ARE EXISTING STRUCTURES ALONG WITH ALL MECHANISMS AND APPURTANANCES.
2. REMOVE, SALVAGE AND REPLACE EXISTING CLARIFIER COVER.
3. REMOVE AND REPLACE EXISTING CLARIFIER MECHANISM AND APPURTANCES (FIELD VERIFY ALL RELATED SIZES AND DIMENSIONS).

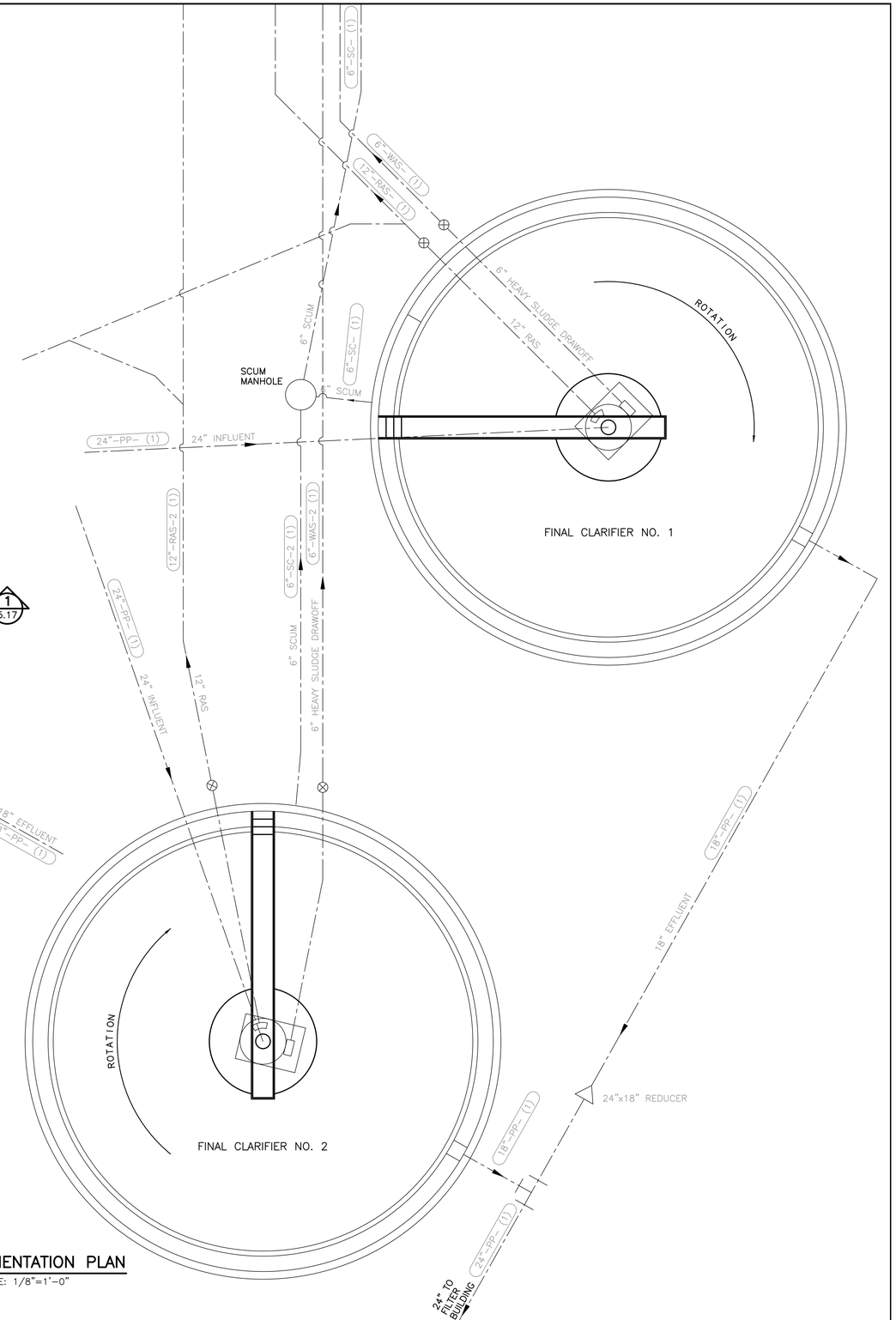

ORIENTATION PLAN

SCALE: 1/8"=1'-0"

SCALES SHOWN ON DRAWINGS ARE FOR 24"x36" SIZE SHEETS ONLY. DRAWINGS PLOTTED ON ANY OTHER SIZE SHEETS NEED TO HAVE SCALES ADJUSTED ACCORDINGLY

© Bolton & Menk, Inc. 2017, All Rights Reserved
H:\WIND\T22113672\CAD\ENV\113672_D_BASE_FINAL-CLARIFERS.DWG 12/13/2017 10:05:14 AM

I HEREBY CERTIFY THAT THIS PLAN, SPECIFICATION OR REPORT WAS PREPARED BY ME OR UNDER MY DIRECT SUPERVISION, AND THAT I AM A DULY LICENSED PROFESSIONAL ENGINEER UNDER THE LAWS OF THE STATE OF MINNESOTA

SIGNATURE: Tejpal S. Bala TYPED OR PRINTED NAME: Tejpal Singh Bala

DATE 12/4/2017 LIC. NO. 49574

BOLTON & MENK

www.bolton-menk.com

REV.	BY	DATE
A	CAL	12/4/2017

CITY OF WINDOM, MINNESOTA

2017 WASTEWATER TREATMENT FACILITY IMPROVEMENTS

EXISTING FINAL CLARIFIERS NO. 1 & NO. 2
PLANS – MODIFICATIONS

SHEET 5.16

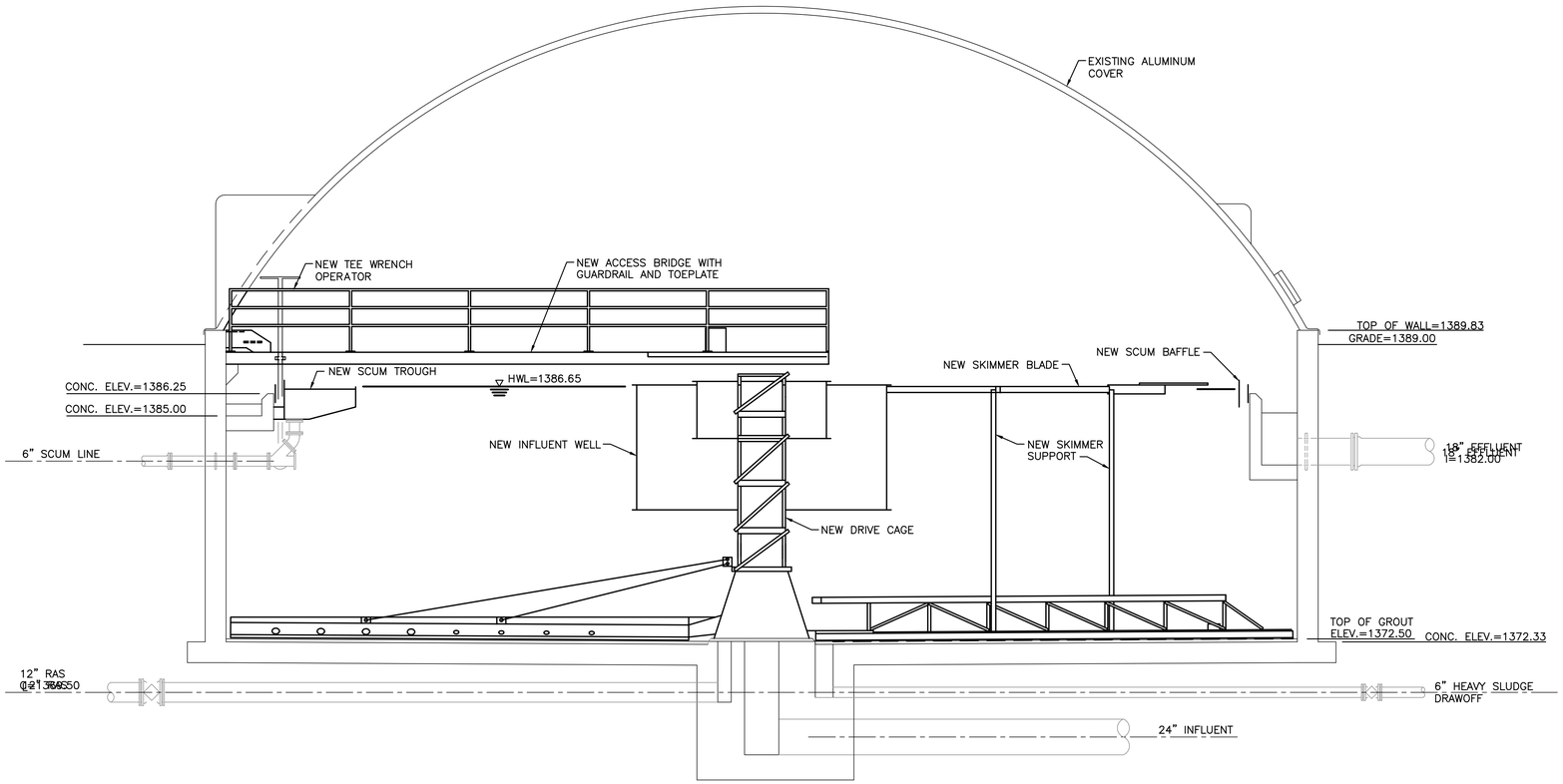

1 / 5.16 SECTION – TYPICAL

SCALE: 1/4"=1'-0"

NOTES:

1. FINAL CLARIFIER NO. 1 AND NO. 2 ARE EXISTING STRUCTURES ALONG WITH ALL MECHANISMS AND APPURTANANCES.
2. REMOVE, SALVAGE AND REPLACE EXISTING CLARIFIER COVER.
3. REMOVE AND REPLACE EXISTING CLARIFIER MECHANISM AND APPURTANCES (FIELD VERIFY ALL RELATED SIZES AND DIMENSIONS).

SCALES SHOWN ON DRAWINGS ARE FOR 24"x36" SIZE SHEETS ONLY. DRAWINGS PLOTTED ON ANY OTHER SIZE SHEETS NEED TO HAVE SCALES ADJUSTED ACCORDINGLY

© Bolton & Menk, Inc. 2017, All Rights Reserved
H:\WIND\T22113672\CAD\ENV\113672_D_BASE_FINAL-CLARIFERS.DWG 12/13/2017 10:05:14 AM

I HEREBY CERTIFY THAT THIS PLAN, SPECIFICATION OR REPORT WAS PREPARED BY ME OR UNDER MY DIRECT SUPERVISION, AND THAT I AM A DULY LICENSED PROFESSIONAL ENGINEER UNDER THE LAWS OF THE STATE OF MINNESOTA

SIGNATURE: Tejpal S. Bala TYPED OR PRINTED NAME: Tejpal Singh Bala

DATE 12/4/2017 LIC. NO. 49574

BOLTON & MENK

www.bolton-menk.com

REV.	BY	DATE
A	CAL	12/4/2017

CITY OF WINDOM, MINNESOTA

2017 WASTEWATER TREATMENT FACILITY IMPROVEMENTS

EXISTING FINAL CLARIFIERS NO. 1 & NO. 2
SECTION – MODIFICATIONS

SHEET 5.17

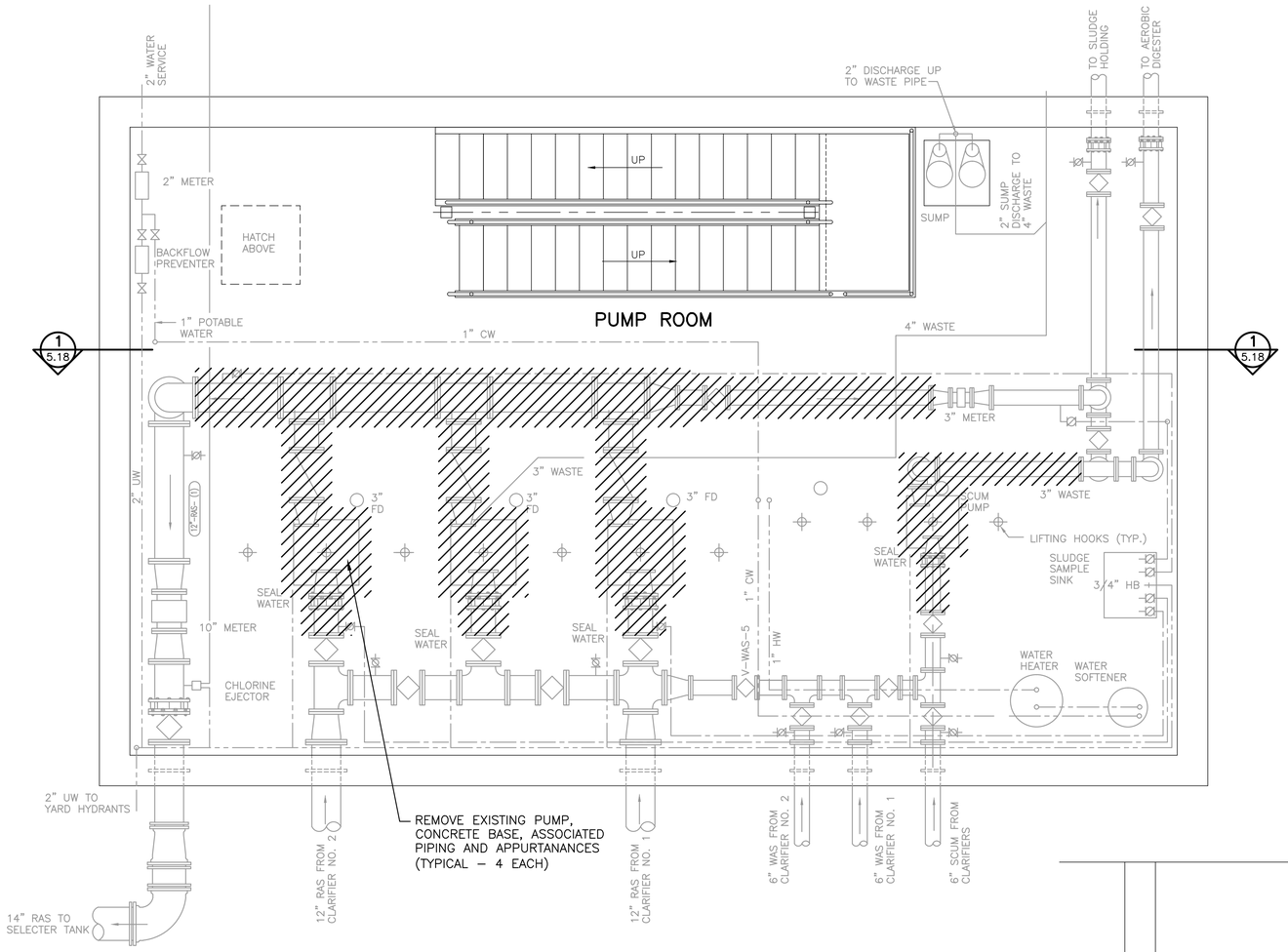

EXISTING LOWER LEVEL PLAN

SCALE: 3/8"=1'-0"

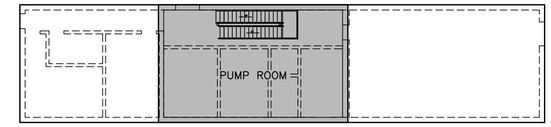

CONTROL BUILDING

NOTES:
- THE CONTROL BUILDING, ALONG WITH PIPING AND EQUIPMENT IS EXISTING.
- REMOVE EXISTING PIPING AND EQUIPMENT AS INDICATED (FIELD VERIFY).
- FIELD VERIFY EXISTING ELEVATIONS AND LOCATIONS.

——— DENOTES EXISTING PIPING

▨ DENOTES PIPE AND EQUIPMENT REMOVALS

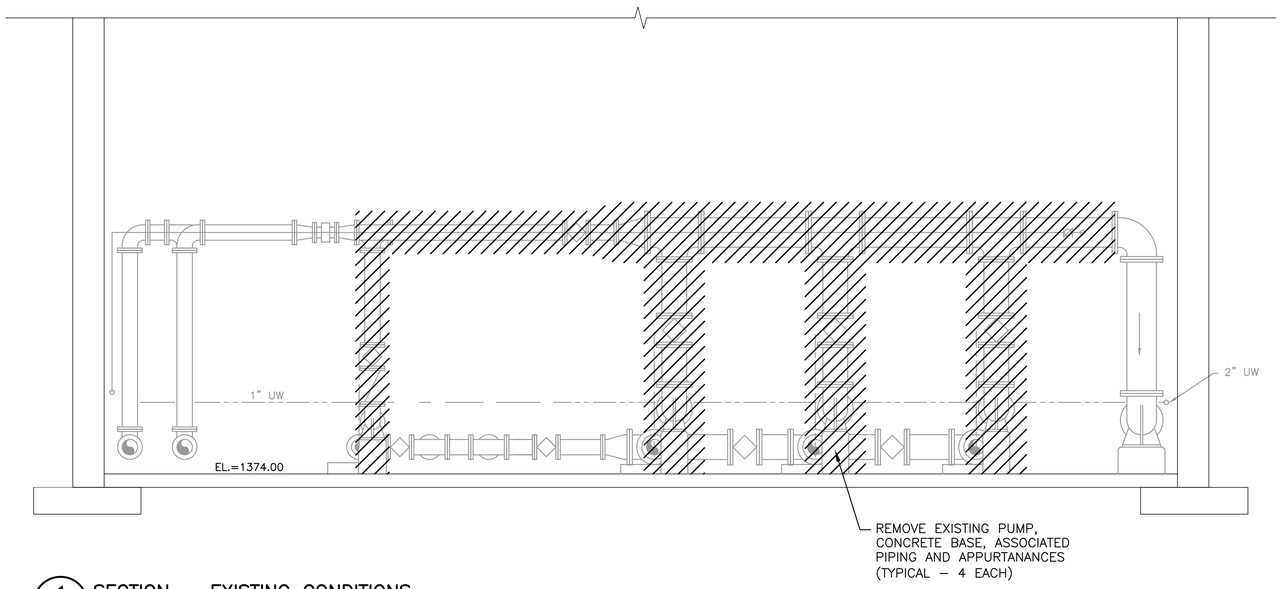

1/5.18 SECTION – EXISTING CONDITIONS

SCALE: 3/8"=1'-0"

SCALES SHOWN ON DRAWINGS ARE FOR 24"x36" SIZE SHEETS ONLY. DRAWINGS PLOTTED ON ANY OTHER SIZE SHEETS NEED TO HAVE SCALES ADJUSTED ACCORDINGLY

© Bolton & Menk, Inc. 2017, All Rights Reserved
H:\WIND\T22113672\CAD\ENV\113672_D_BASE_506-508-CONTROL-BLDG-PUMPS.DWG 12/7/2017 3:38:17 PM

I HEREBY CERTIFY THAT THIS PLAN, SPECIFICATION OR REPORT WAS PREPARED BY ME OR UNDER MY DIRECT SUPERVISION, AND THAT I AM A DULY LICENSED PROFESSIONAL ENGINEER UNDER THE LAWS OF THE STATE OF MINNESOTA

SIGNATURE: Tejpal S. Bala TYPED OR PRINTED NAME: Tejpal Singh Bala

DATE 12/4/2017 LIC. NO. 49574

BOLTON & MENK

www.bolton-menk.com

REV.	BY	DATE
A	CAL	12/4/2017

CITY OF WINDOM, MINNESOTA

2017 WASTEWATER TREATMENT FACILITY IMPROVEMENTS

EXISTING CONTROL BUILDING PUMP ROOM DEMOLITION – PLAN & SECTION

SHEET 5.18

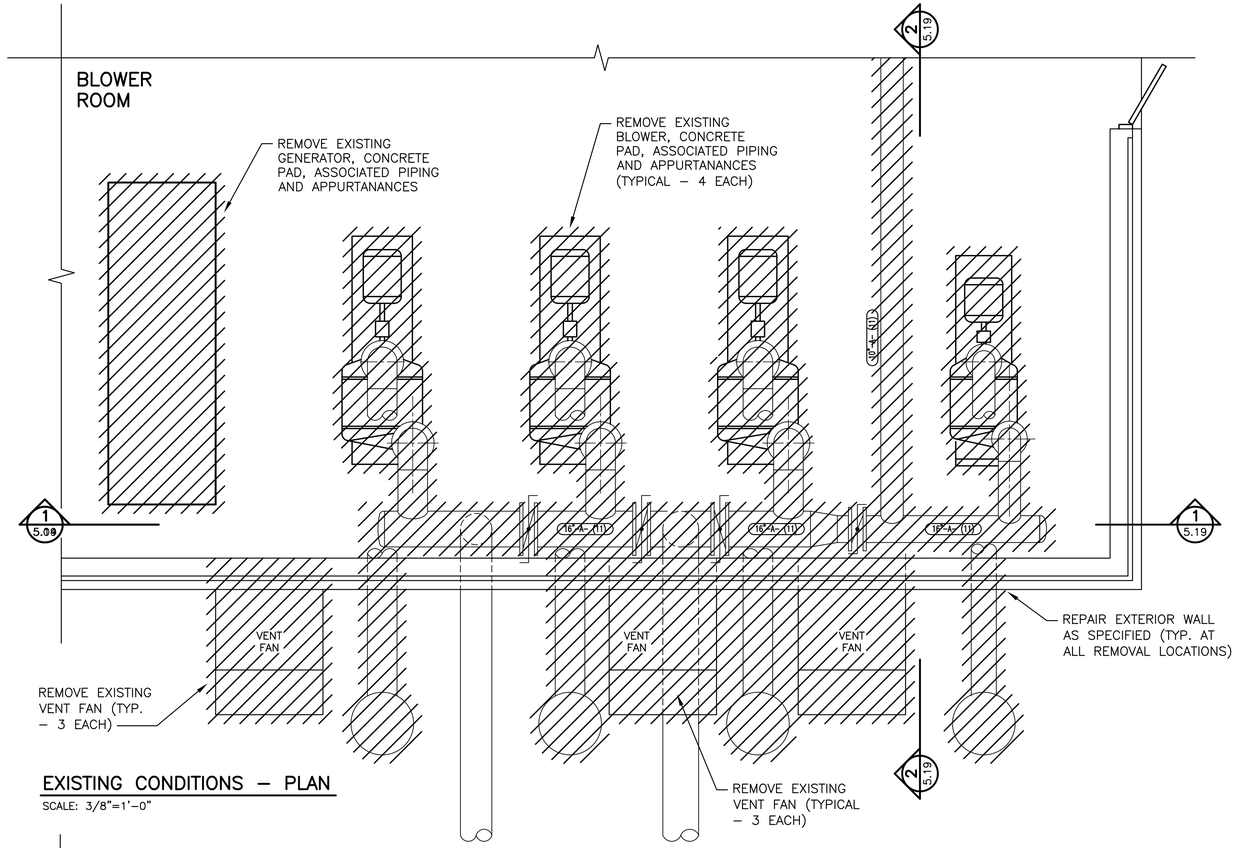

EXISTING CONDITIONS – PLAN

SCALE: 3/8"=1'-0"

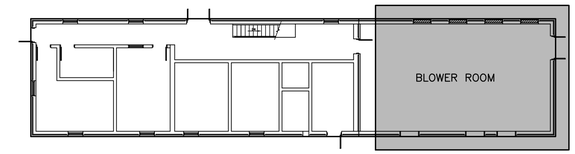

CONTROL BUILDING

NOTES:
- THE CONTROL BUILDING, ALONG WITH PIPING AND EQUIPMENT IS EXISTING.
- REMOVE EXISTING PIPING AND EQUIPMENT AS INDICATED (FIELD VERIFY).
- FIELD VERIFY EXISTING ELEVATIONS AND LOCATIONS.

——— DENOTES EXISTING PIPING
▨ DENOTES PIPE AND EQUIPMENT REMOVALS

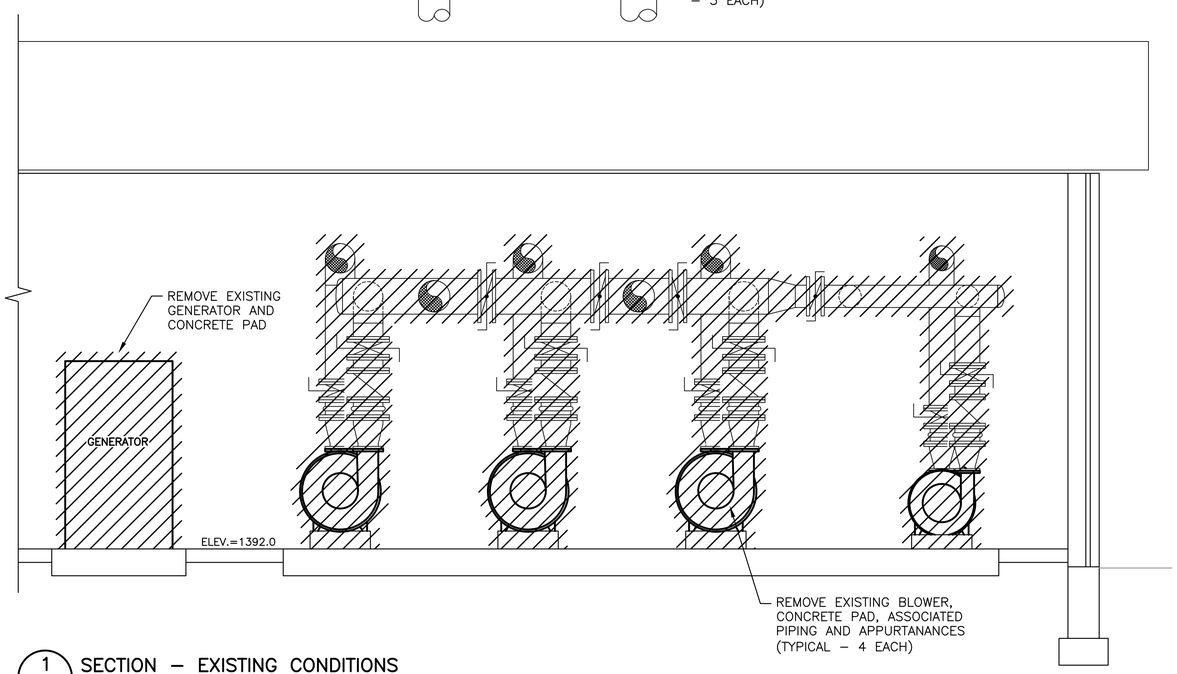

1/5.19 SECTION – EXISTING CONDITIONS

SCALE: 3/8"=1'-0"

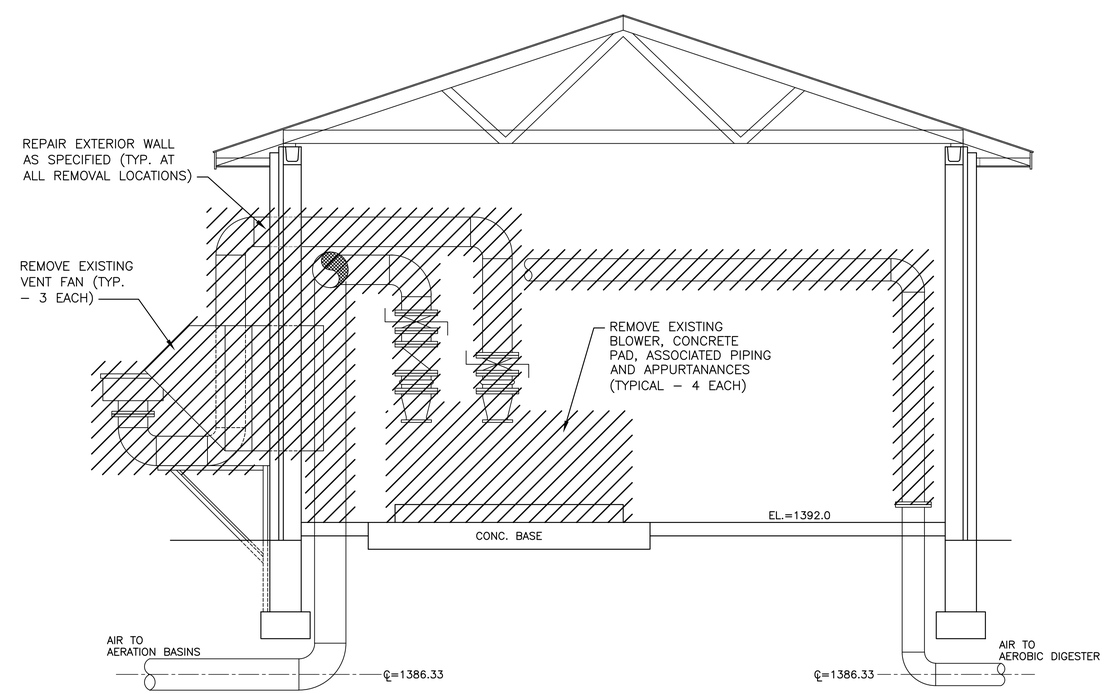

2/5.19 SECTION – EXISTING CONDITIONS

SCALE: 3/8"=1'-0"

SCALES SHOWN ON DRAWINGS ARE FOR 24"x36" SIZE SHEETS ONLY. DRAWINGS PLOTTED ON ANY OTHER SIZE SHEETS NEED TO HAVE SCALES ADJUSTED ACCORDINGLY

© Bolton & Menk, Inc. 2017, All Rights Reserved
H:\WIND\T22113672\CAD\ENV\113672_D_BASE_504-505-CONTROL-BLDG-BLOWERS.DWG 12/7/2017 3:39:06 PM

I HEREBY CERTIFY THAT THIS PLAN, SPECIFICATION OR REPORT WAS PREPARED BY ME OR UNDER MY DIRECT SUPERVISION, AND THAT I AM A DULY LICENSED PROFESSIONAL ENGINEER UNDER THE LAWS OF THE STATE OF MINNESOTA

SIGNATURE: Tejpal S. Bala TYPED OR PRINTED NAME: Tejpal Singh Bala
DATE 12/4/2017 LIC. NO. 49574

BOLTON & MENK
www.bolton-menk.com

REV.	BY	DATE
A	CAL	12/4/2017

CITY OF WINDOM, MINNESOTA
2017 WASTEWATER TREATMENT FACILITY IMPROVEMENTS
EXISTING CONTROL BUILDING BLOWER ROOM DEMOLITION – PLAN & SECTIONS

SHEET 5.19

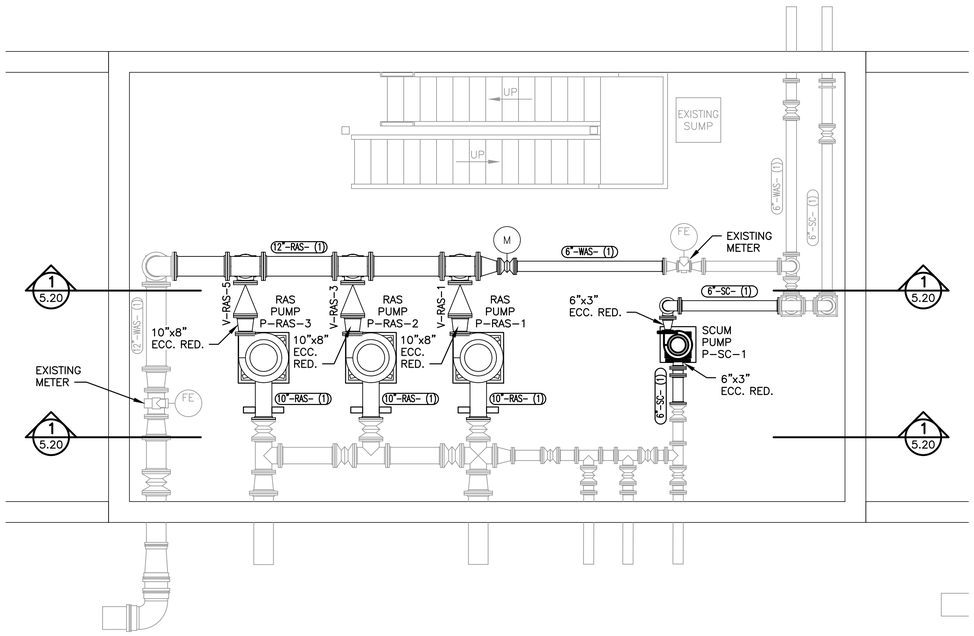

LOWER LEVEL PUMP ROOM PLAN

SCALE: 1/4"=1'-0"

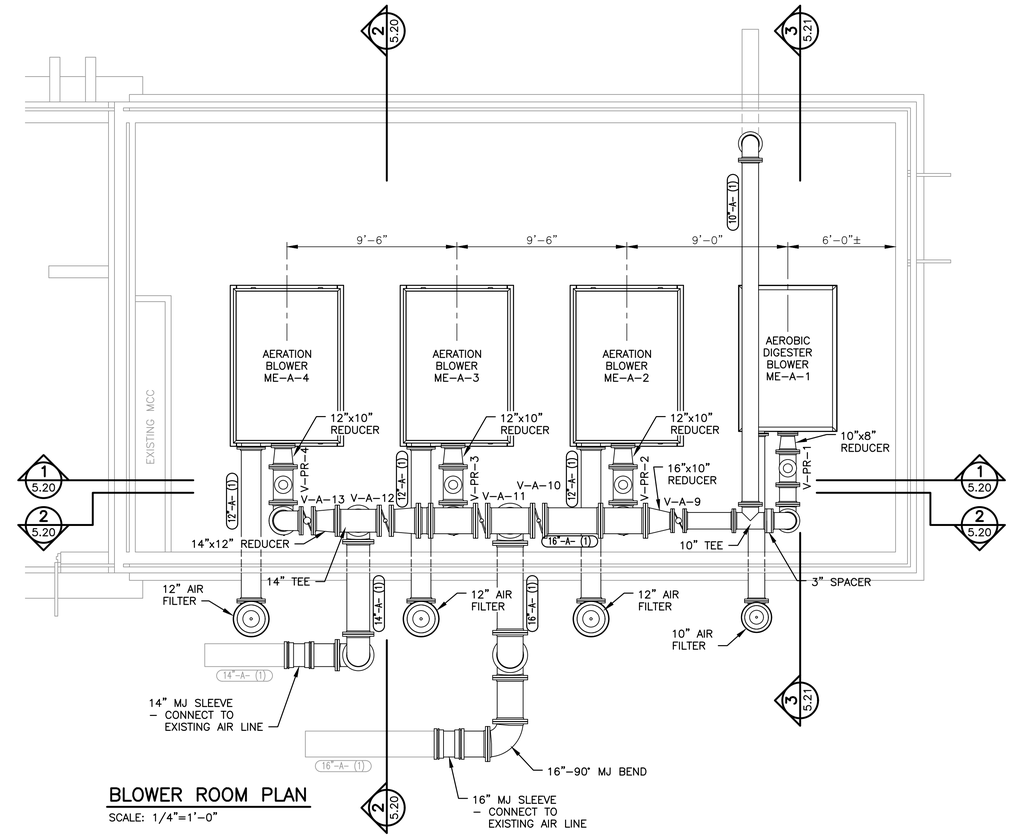

BLOWER ROOM PLAN

SCALE: 1/4"=1'-0"

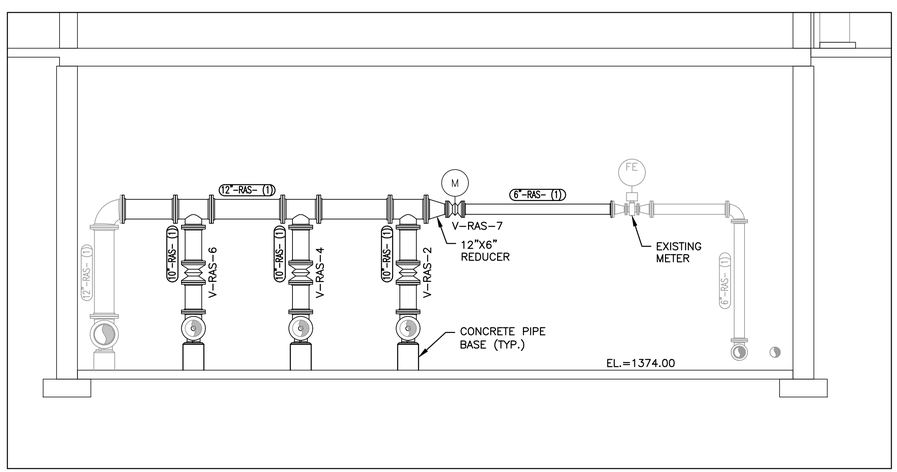

1 5.20 SECTION

SCALE: 1/4"=1'-0"

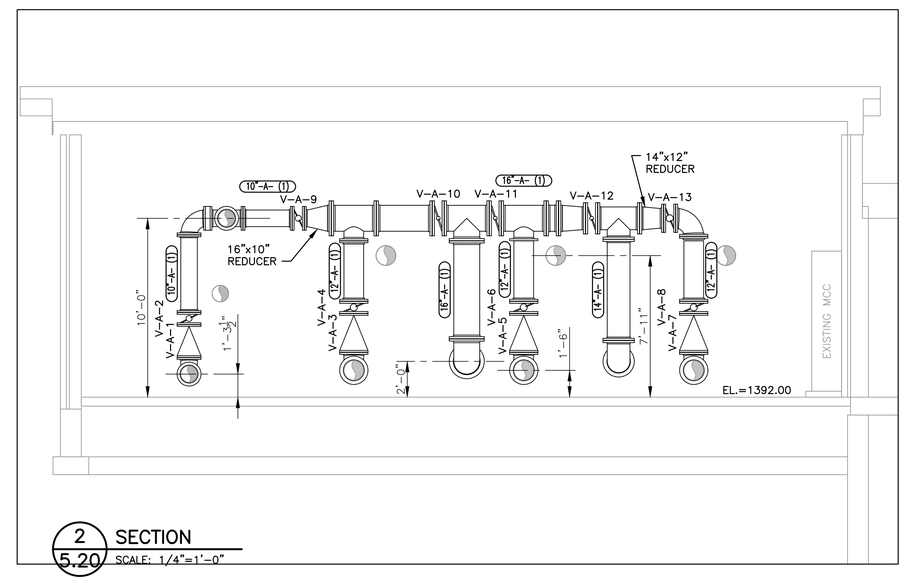

2 5.20 SECTION

SCALE: 1/4"=1'-0"

SCALES SHOWN ON DRAWINGS ARE FOR 24"x36" SIZE SHEETS ONLY. DRAWINGS PLOTTED ON ANY OTHER SIZE SHEETS NEED TO HAVE SCALES ADJUSTED ACCORDINGLY

0 1 2 3 4 6 8 12
Graphic Scale for 1/4"=1'-0"

© Bolton & Menk, Inc. 2018, All Rights Reserved
H:\WIND\T22113672\CAD\ENV\Plant 3D\Windom WWTF\Windom WWTF\Orthos\DWGs\Control Building_Plan Sheet.dwg 5/8/2018 6:47 PM

I HEREBY CERTIFY THAT THIS PLAN, SPECIFICATION OR REPORT WAS PREPARED BY ME OR UNDER MY DIRECT SUPERVISION, AND THAT I AM A DULY LICENSED PROFESSIONAL ENGINEER UNDER THE LAWS OF THE STATE OF MINNESOTA

SIGNATURE: _____ TYPED OR PRINTED NAME: Tejpal Singh Bala

DATE 12/4/2017 LIC. NO. 49574

BOLTON & MENK

www.bolton-menk.com

REV.	BY	DATE
A	CAL	12/4/2017

CITY OF WINDOM, MINNESOTA

2017 WASTEWATER TREATMENT FACILITY IMPROVEMENTS

EXISTING CONTROL BUILDING
PROPOSED MODIFICATIONS – PLANS

SHEET 5.20

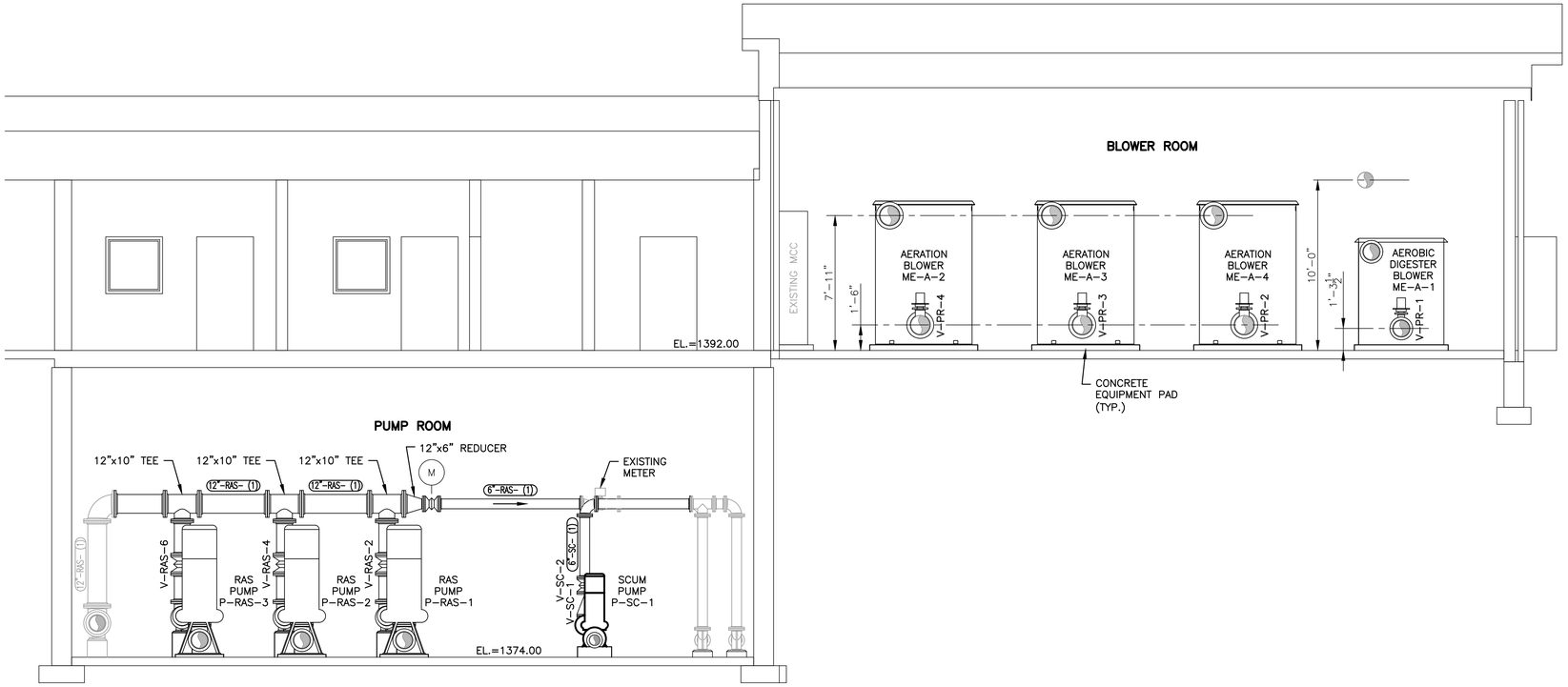

1 / 5.20 SECTION
SCALE: 1/4"=1'-0"

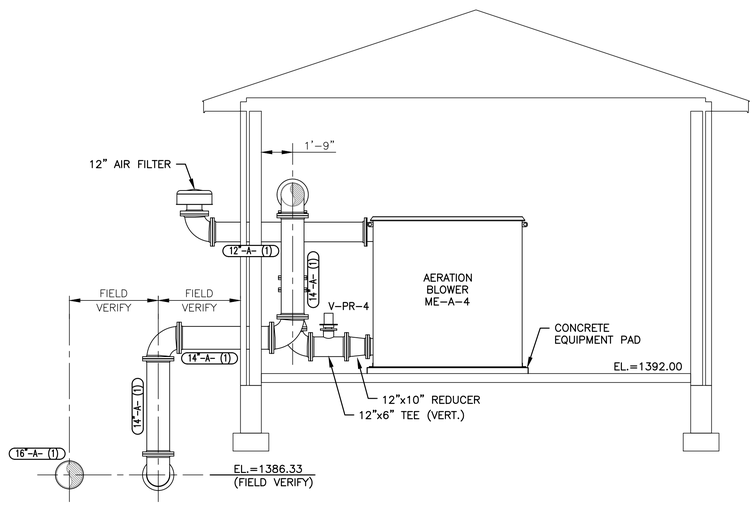

2 / 5.20 SECTION
SCALE: 1/4"=1'-0"

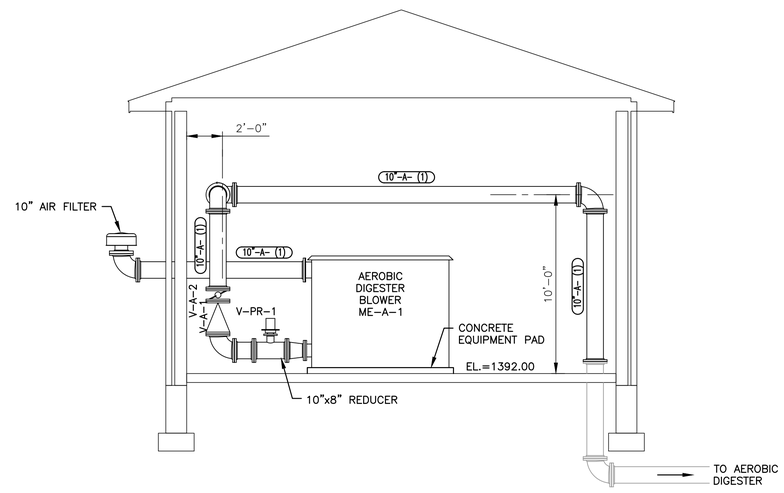

3 / 5.20 SECTION
SCALE: 1/4"=1'-0"

SCALES SHOWN ON DRAWINGS ARE FOR 24"x36" SIZE SHEETS ONLY. DRAWINGS PLOTTED ON ANY OTHER SIZE SHEETS NEED TO HAVE SCALES ADJUSTED ACCORDINGLY

© Bolton & Menk, Inc. 2018, All Rights Reserved
H:\WIND\T22113672\CAD\ENV\Plant 3D\Windom WWTF\Windom WWTF\Orthos\DWGs\Control Building_Section Sheet.dwg 5/8/2018 5:15 PM

I HEREBY CERTIFY THAT THIS PLAN, SPECIFICATION OR REPORT WAS PREPARED BY ME OR UNDER MY DIRECT SUPERVISION, AND THAT I AM A DULY LICENSED PROFESSIONAL ENGINEER UNDER THE LAWS OF THE STATE OF MINNESOTA

SIGNATURE: _____ TYPED OR PRINTED NAME: Tejpal Singh Bala
DATE 12/4/2017 LIC. NO. 49574

BOLTON & MENK
www.bolton-menk.com

REV.	BY	DATE
A	CAL	12/4/2017

CITY OF WINDOM, MINNESOTA
2017 WASTEWATER TREATMENT FACILITY IMPROVEMENTS
EXISTING CONTROL BUILDING
PROPOSED MODIFICATIONS – SECTIONS

SHEET 5.21

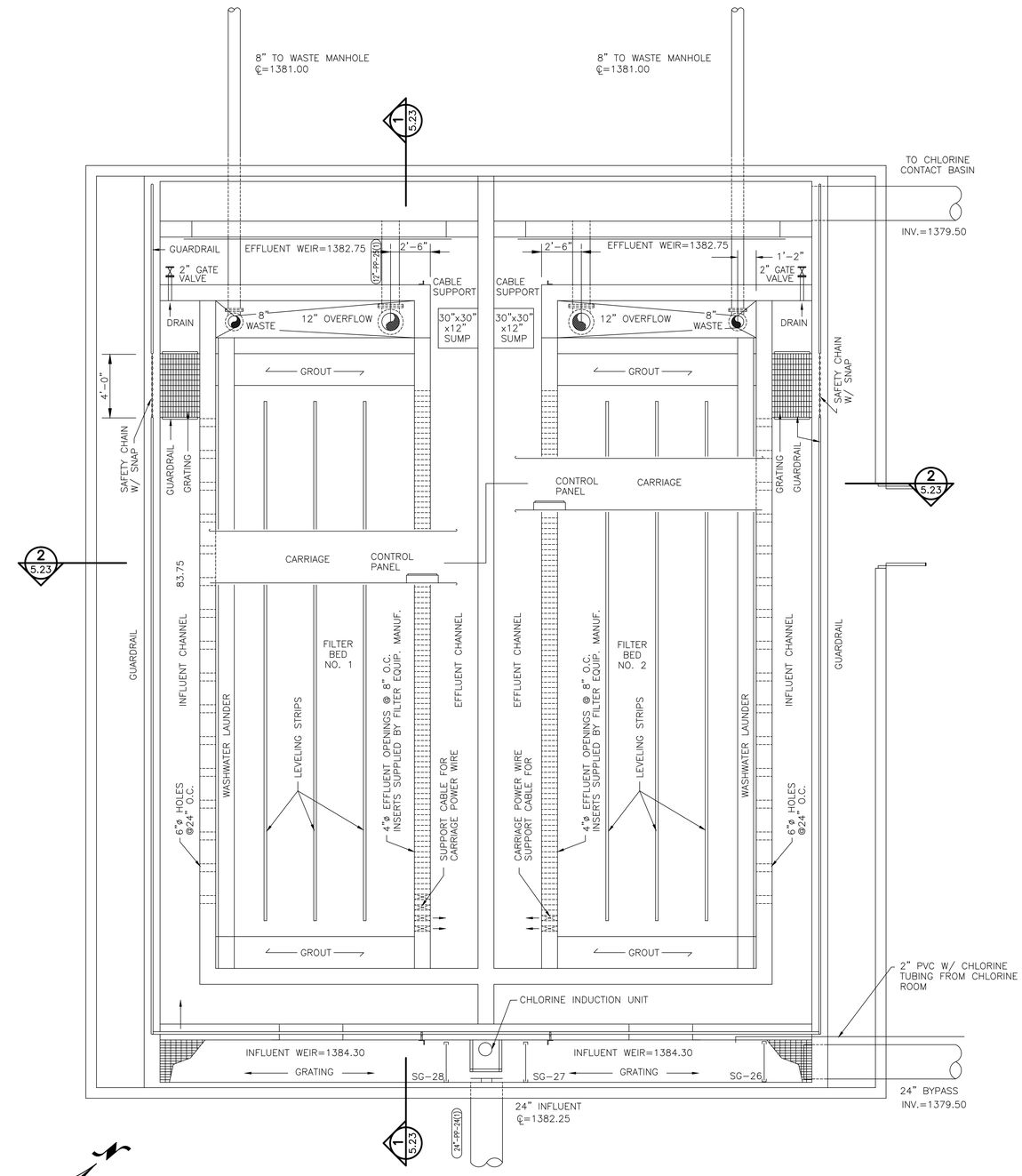

EXISTING CONDITIONS – PLAN

SCALE: 1/4"=1'-0"

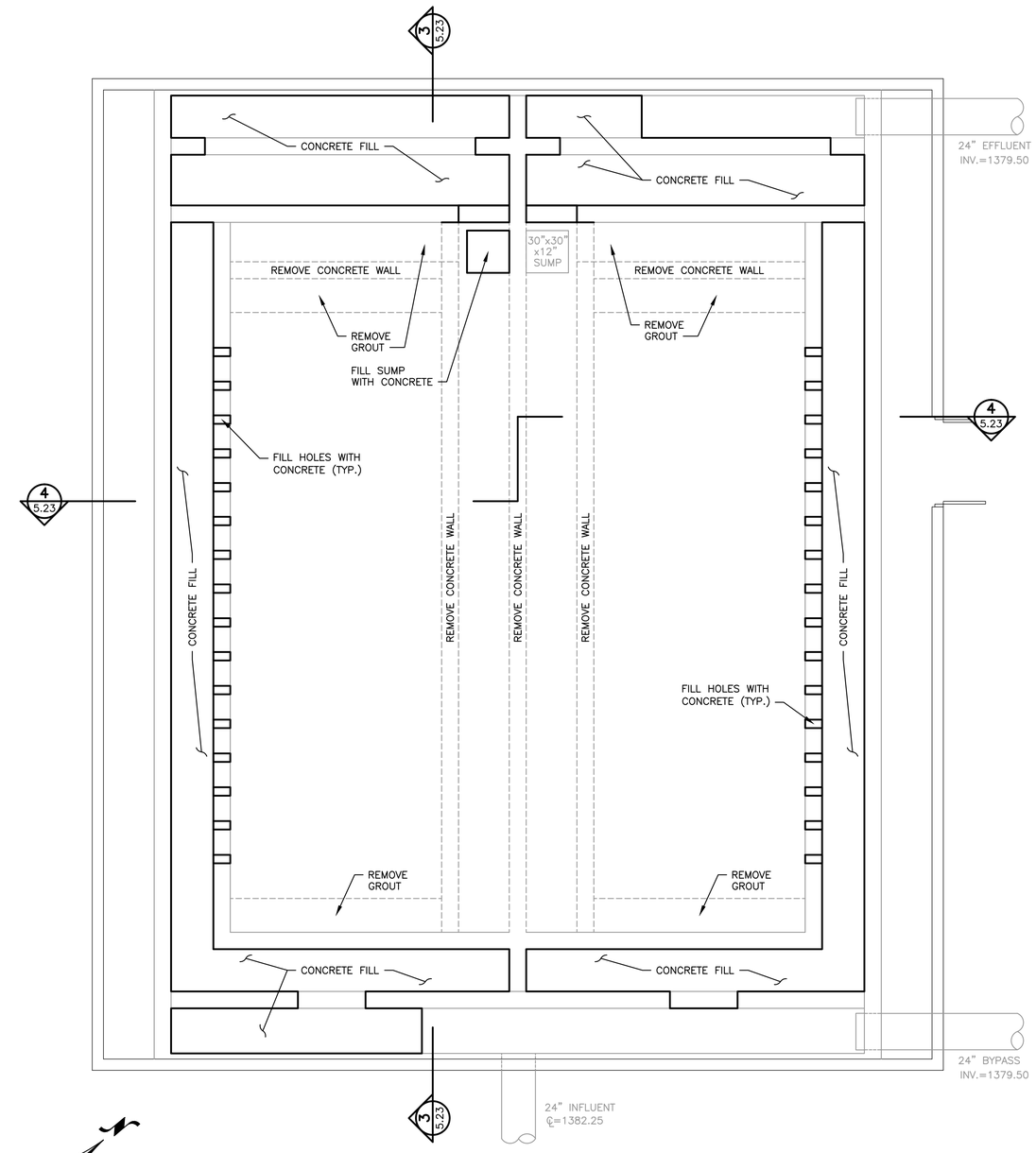

PROPOSED MODIFICATIONS – PLAN

SCALE: 1/4"=1'-0"

NOTE:
REMOVE AND DISPOSE FILTER MEDIA AND MISC. APPURTENANCES.

SCALES SHOWN ON DRAWINGS ARE FOR 24"x36" SIZE SHEETS ONLY. DRAWINGS PLOTTED ON ANY OTHER SIZE SHEETS NEED TO HAVE SCALES ADJUSTED ACCORDINGLY

© Bolton & Menk, Inc. 2017, All Rights Reserved
H:\WIND\T22113672\CAD\ENV\113672_D_BASE_FILTER-BLDG.DWG 12/7/2017 5:37:36 PM

I HEREBY CERTIFY THAT THIS PLAN, SPECIFICATION OR REPORT WAS PREPARED BY ME OR UNDER MY DIRECT SUPERVISION, AND THAT I AM A DULY LICENSED PROFESSIONAL ENGINEER UNDER THE LAWS OF THE STATE OF MINNESOTA

SIGNATURE: Tejpal S. Bala TYPED OR PRINTED NAME: Tejpal Singh Bala
DATE 12/4/2017 LIC. NO. 49574

BOLTON & MENK
www.bolton-menk.com

REV.	BY	DATE
A	CAL	12/4/2017

CITY OF WINDOM, MINNESOTA
2017 WASTEWATER TREATMENT FACILITY IMPROVEMENTS
EXISTING FILTER BUILDING
EXISTING CONDITIONS & PROPOSED MODIFICATIONS – PLANS

SHEET 5.22

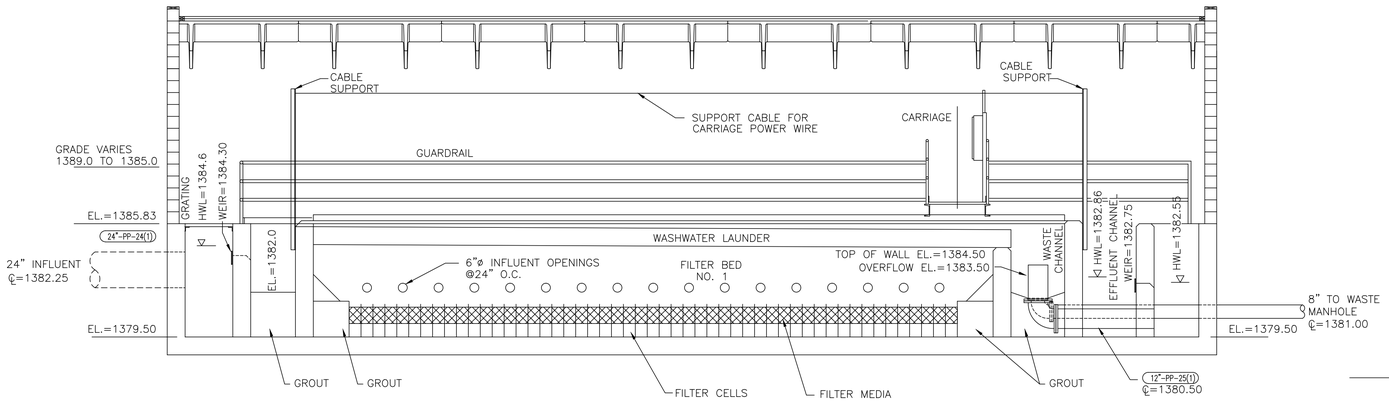

1 / 5.22 SECTION
SCALE: 1/4"=1'-0"

NOTE:
REMOVE AND DISPOSE FILTER BRIDGES, GUARDRAILS, ELECTRICAL PANELS AND MISC. APPURTENANCES.

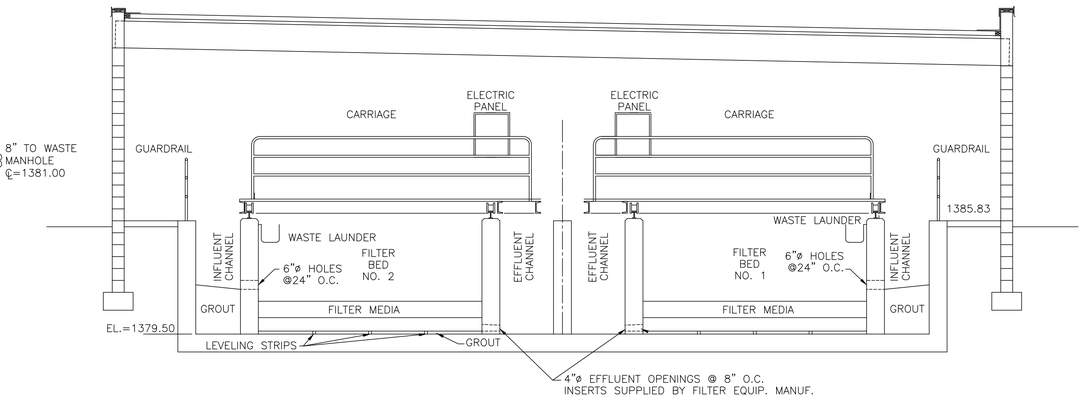

2 / 5.22 SECTION
SCALE: 1/4"=1'-0"

NOTE:
REMOVE AND DISPOSE FILTER BRIDGES, GUARDRAILS, ELECTRICAL PANELS AND MISC. APPURTENANCES.

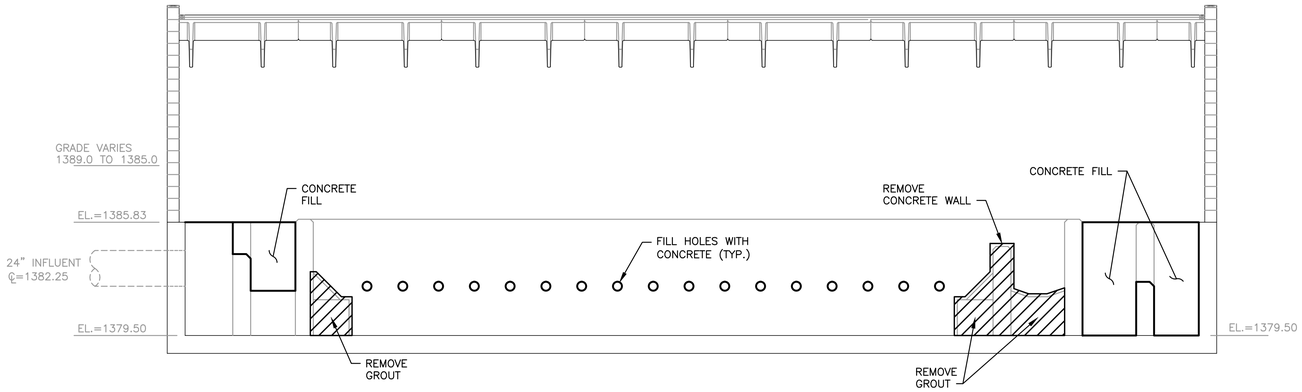

3 / 5.22 SECTION
SCALE: 1/4"=1'-0"

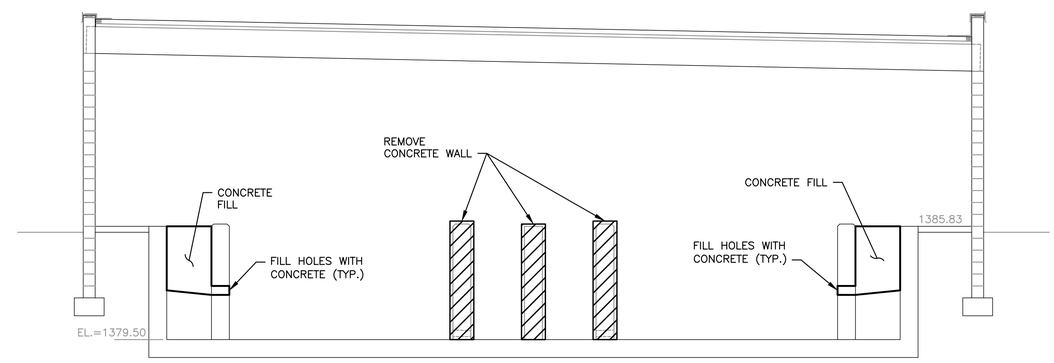

4 / 5.22 SECTION
SCALE: 1/4"=1'-0"

SCALES SHOWN ON DRAWINGS ARE FOR 24"x36" SIZE SHEETS ONLY. DRAWINGS PLOTTED ON ANY OTHER SIZE SHEETS NEED TO HAVE SCALES ADJUSTED ACCORDINGLY

© Bolton & Menk, Inc. 2017, All Rights Reserved
H:\WIND\T22113672\CAD\ENV\113672_D_BASE_FILTER-BLDG.DWG 12/7/2017 5:37:36 PM

I HEREBY CERTIFY THAT THIS PLAN, SPECIFICATION OR REPORT WAS PREPARED BY ME OR UNDER MY DIRECT SUPERVISION, AND THAT I AM A DULY LICENSED PROFESSIONAL ENGINEER UNDER THE LAWS OF THE STATE OF MINNESOTA

SIGNATURE: Tejpal S. Bala TYPED OR PRINTED NAME: Tejpal Singh Bala
DATE 12/4/2017 LIC. NO. 49574

BOLTON & MENK
www.bolton-menk.com

REV.	BY	DATE
A	CAL	12/4/2017

CITY OF WINDOM, MINNESOTA
2017 WASTEWATER TREATMENT FACILITY IMPROVEMENTS
EXISTING FILTER BUILDING
EXISTING CONDITIONS & PROPOSED MODIFICATIONS – SECTIONS

SHEET 5.23

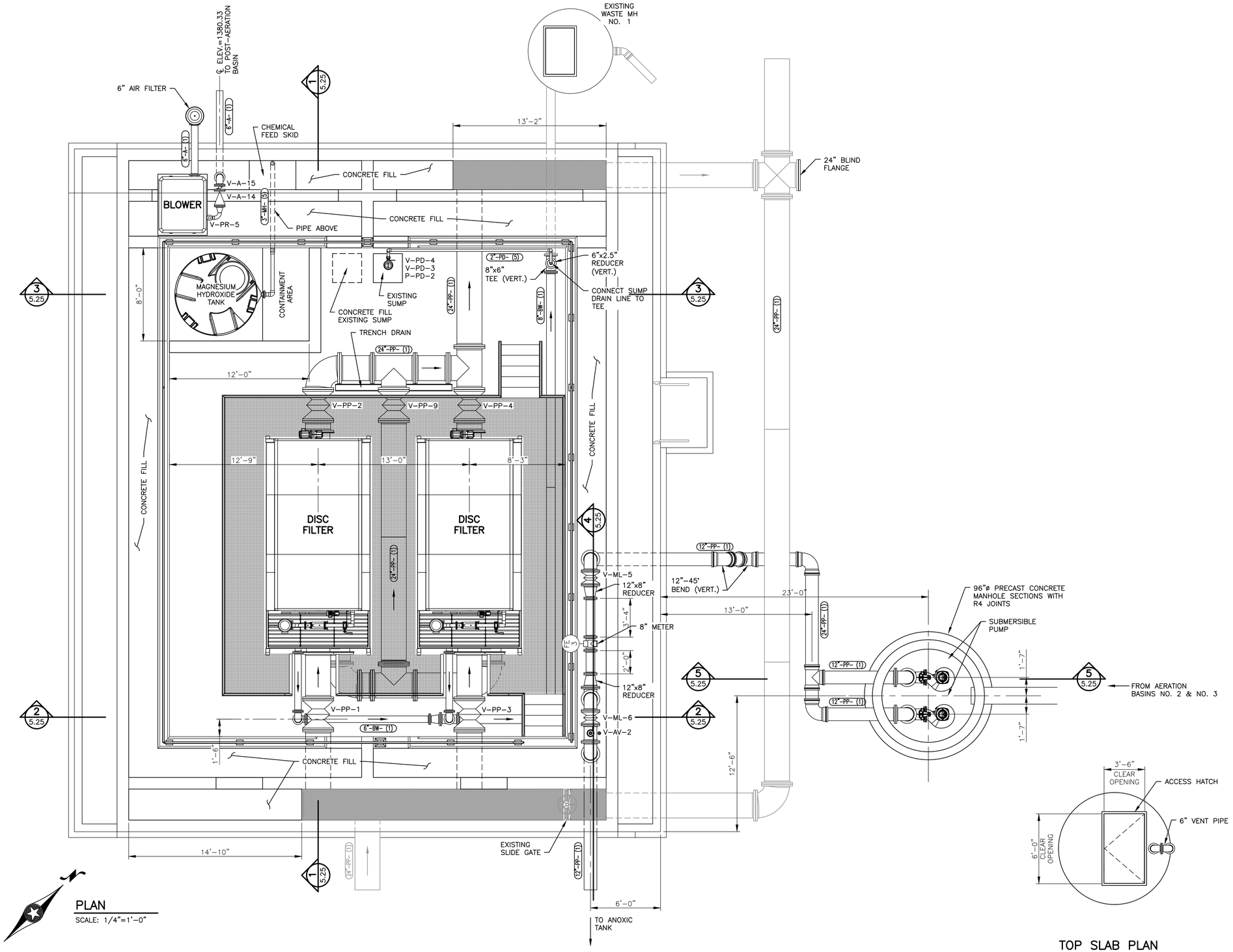

SCALES SHOWN ON DRAWINGS ARE FOR 24"x36" SIZE SHEETS ONLY. DRAWINGS PLOTTED ON ANY OTHER SIZE SHEETS NEED TO HAVE SCALES ADJUSTED ACCORDINGLY

0 1 2 3 4 6 8 12
Graphic Scale for 1/4"=1'-0"

© Bolton & Menk, Inc. 2017, All Rights Reserved
H:\WIND\T22113672\CAD\ENV\Plant 3D\Windom WWTF\Windom WWTF\Orthos\DWGs\Filter Building_Plan Sheet.dwg 12/7/2017 5:39 PM

I HEREBY CERTIFY THAT THIS PLAN, SPECIFICATION OR REPORT WAS PREPARED BY ME OR UNDER MY DIRECT SUPERVISION, AND THAT I AM A DULY LICENSED PROFESSIONAL ENGINEER UNDER THE LAWS OF THE STATE OF MINNESOTA

SIGNATURE: Tejpal S. Bala TYPED OR PRINTED NAME: Tejpal Singh Bala
DATE 12/4/2017 LIC. NO. 49574

BOLTON & MENK
www.bolton-menk.com

REV.	BY	DATE
A	CAL	12/4/2017

CITY OF WINDOM, MINNESOTA
2017 WASTEWATER TREATMENT FACILITY IMPROVEMENTS
EXISTING FILTER BUILDING PROPOSED MODIFICATIONS – PLAN
MIXED LIQUOR LIFT STATION – PLANS

SHEET 5.24

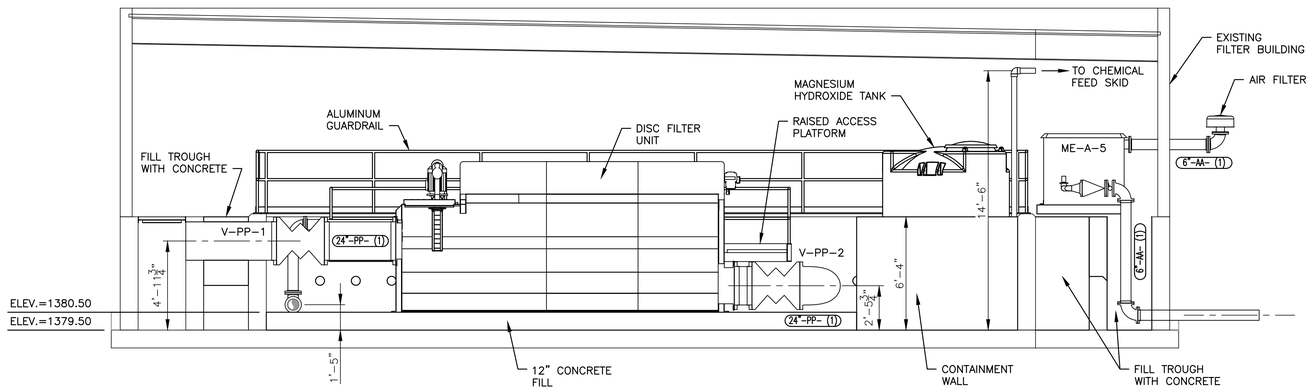

1 5.24 SECTION
SCALE: 1/4"=1'-0"

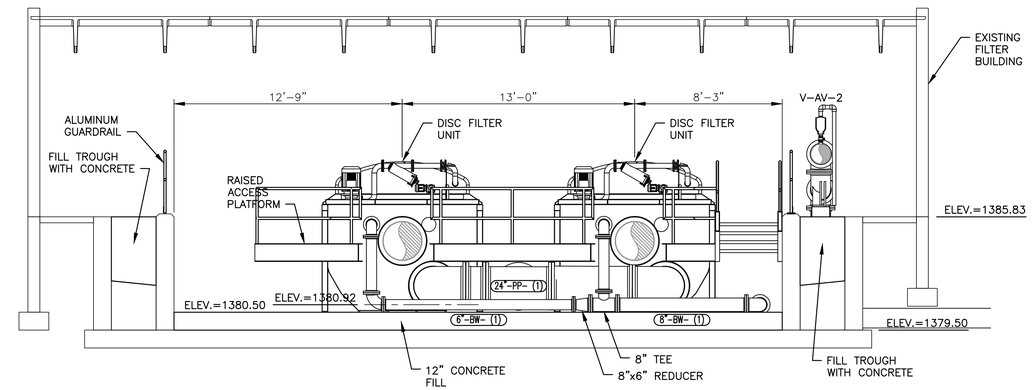

2 5.24 SECTION
SCALE: 1/4"=1'-0"

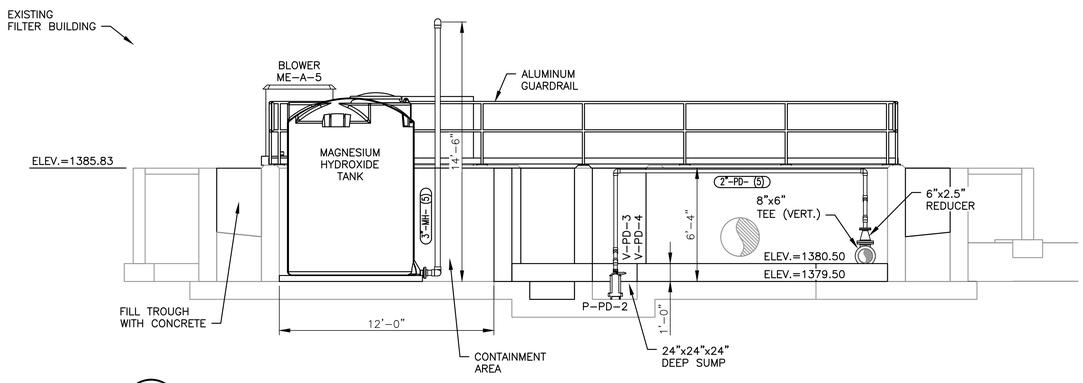

3 5.24 SECTION
SCALE: 1/4"=1'-0"

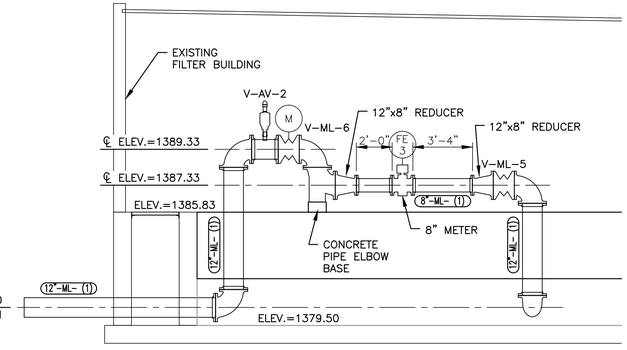

4 5.24 SECTION
SCALE: 1/4"=1'-0"

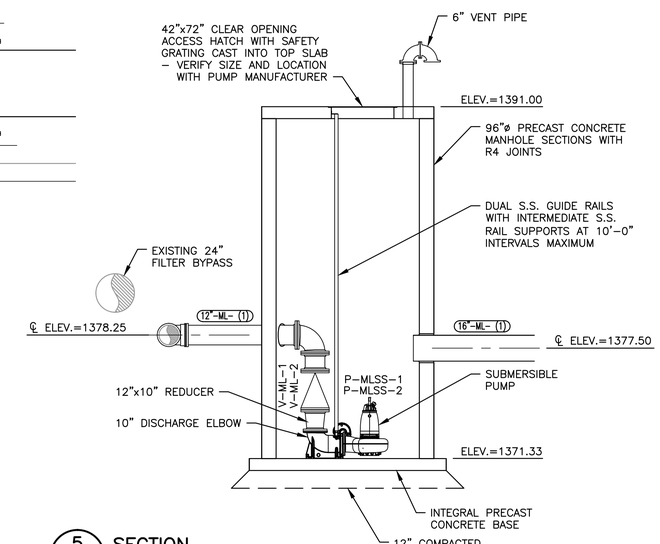

5 5.24 SECTION
SCALE: 1/4"=1'-0"

SCALES SHOWN ON DRAWINGS ARE FOR 24"x36" SIZE SHEETS ONLY. DRAWINGS PLOTTED ON ANY OTHER SIZE SHEETS NEED TO HAVE SCALES ADJUSTED ACCORDINGLY

0 1 2 3 4 6 8 12
Graphic Scale for 1/4"=1'-0"

© Bolton & Menk, Inc. 2017, All Rights Reserved
H:\WIND\T22113672\CAD\ENV\Plant 3D\Windom WWTF\Windom WWTF\Orthos\DWGs\Filter Building_Section Sheet.dwg 12/7/2017 5:39 PM

I HEREBY CERTIFY THAT THIS PLAN, SPECIFICATION OR REPORT WAS PREPARED BY ME OR UNDER MY DIRECT SUPERVISION, AND THAT I AM A DULY LICENSED PROFESSIONAL ENGINEER UNDER THE LAWS OF THE STATE OF MINNESOTA

SIGNATURE: Tejpal S. Bala TYPED OR PRINTED NAME: Tejpal Singh Bala
DATE 12/4/2017 LIC. NO. 49574

BOLTON & MENK
www.bolton-menk.com

REV.	BY	DATE
A	CAL	12/4/2017

CITY OF WINDOM, MINNESOTA
2017 WASTEWATER TREATMENT FACILITY IMPROVEMENTS
EXISTING FILTER BUILDING
PROPOSED MODIFICATIONS – SECTIONS

SHEET 5.25

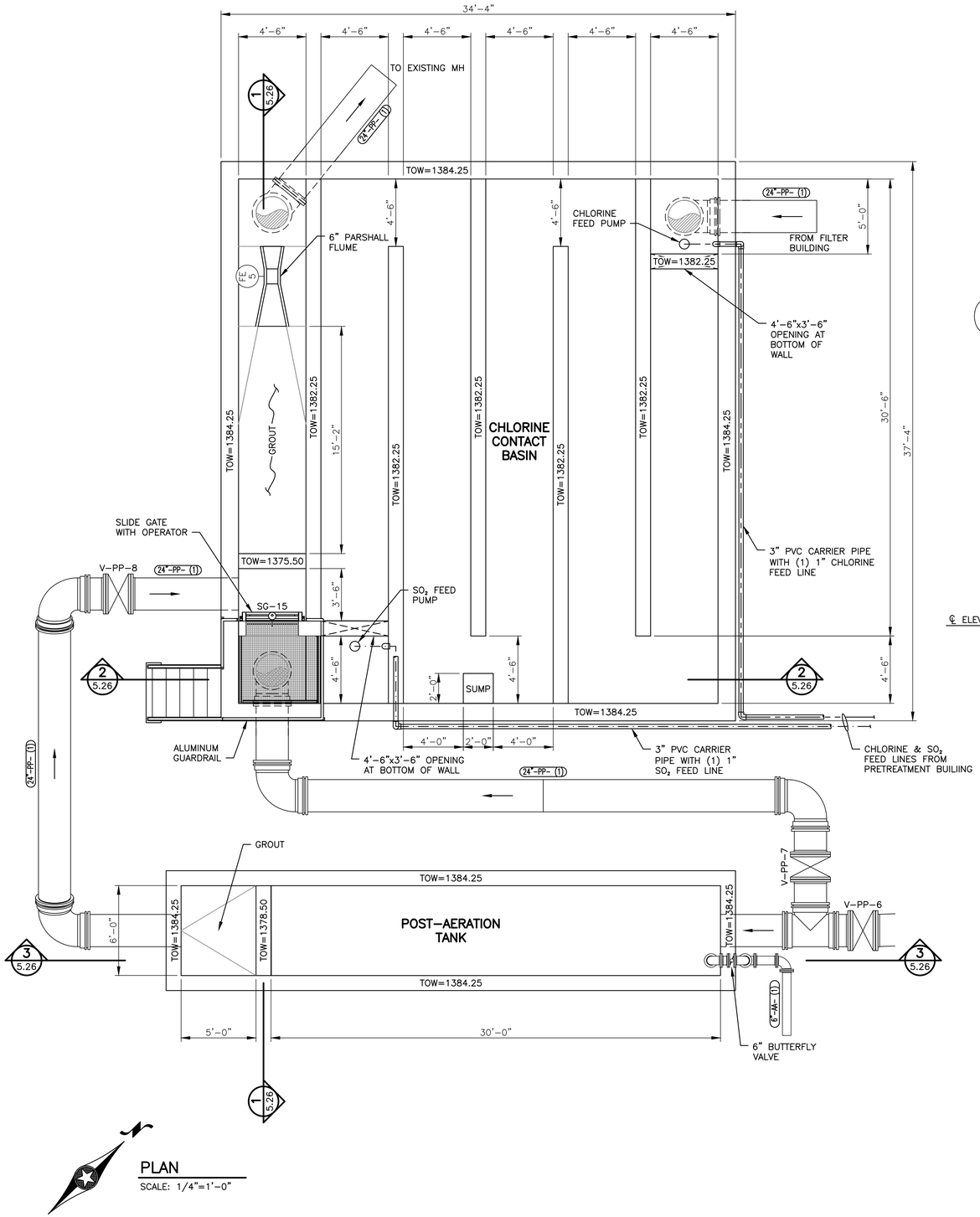

PLAN
SCALE: 1/4"=1'-0"

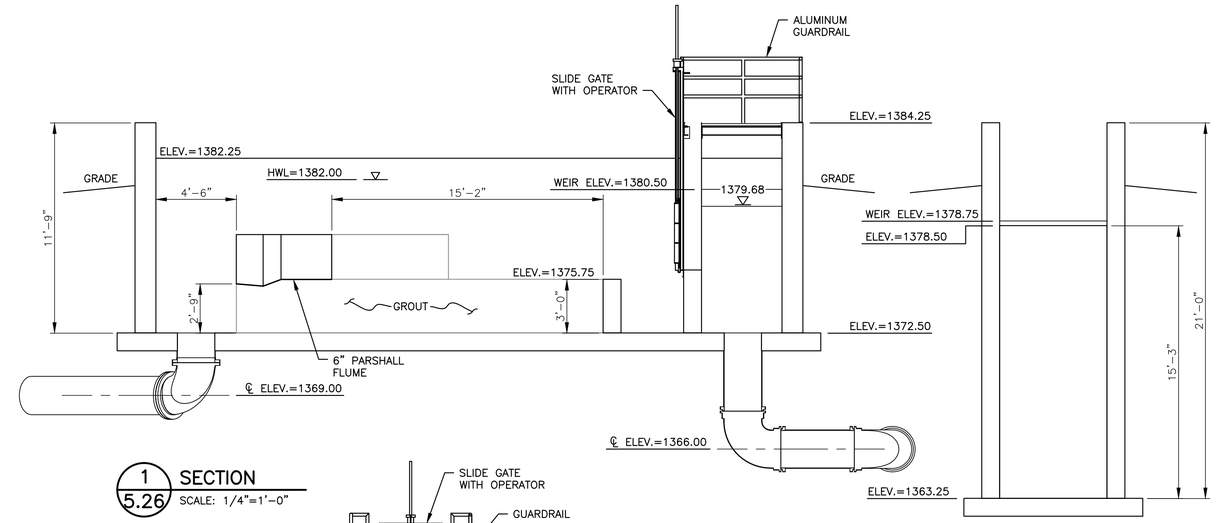

1 5.26 SECTION
SCALE: 1/4"=1'-0"

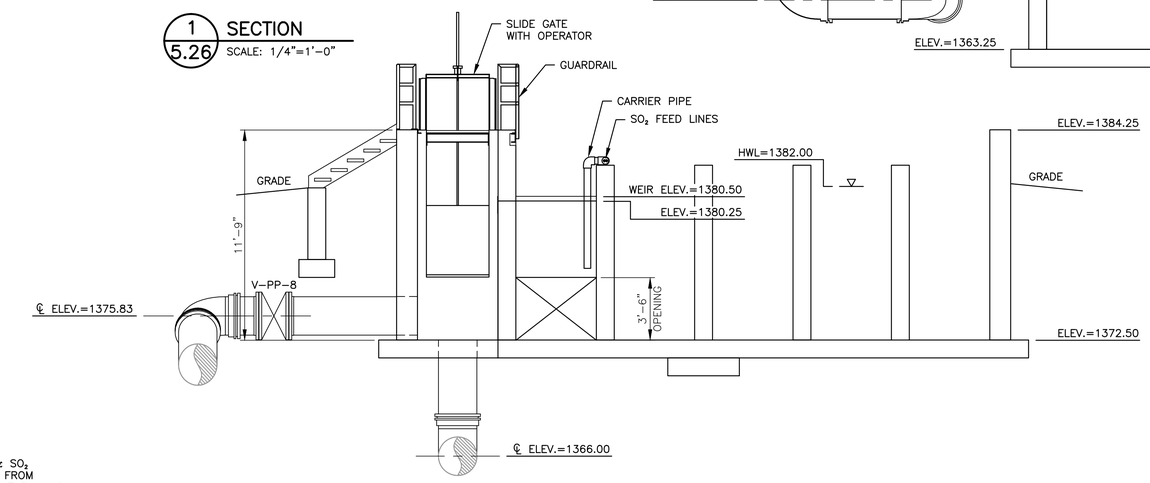

2 5.26 SECTION
SCALE: 1/4"=1'-0"

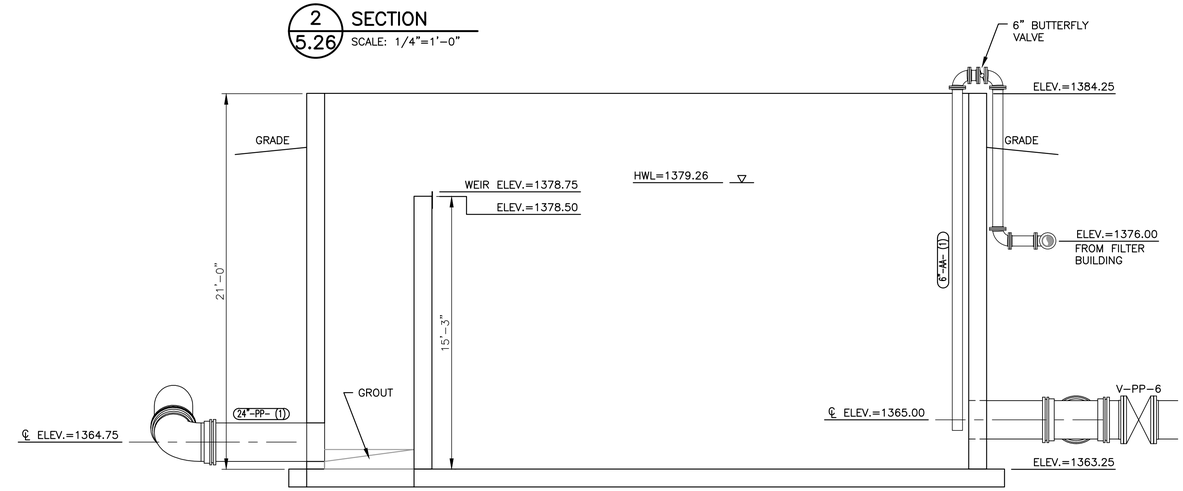

3 5.26 SECTION
SCALE: 1/4"=1'-0"

SCALES SHOWN ON DRAWINGS ARE FOR 24"x36" SIZE SHEETS ONLY. DRAWINGS PLOTTED ON ANY OTHER SIZE SHEETS NEED TO HAVE SCALES ADJUSTED ACCORDINGLY

0 1 2 3 4 6 8 12
Graphic Scale for 1/4"=1'-0"

© Bolton & Menk, Inc. 2017, All Rights Reserved
H:\WIND\T22113672\CAD\ENV\Plant 3D\Windom WWTF\Windom WWTF\Orthos\DWGs\Chlorine Contact_Plan Sheet.dwg 12/7/2017 6:01 PM

I HEREBY CERTIFY THAT THIS PLAN, SPECIFICATION OR REPORT WAS PREPARED BY ME OR UNDER MY DIRECT SUPERVISION, AND THAT I AM A DULY LICENSED PROFESSIONAL ENGINEER UNDER THE LAWS OF THE STATE OF MINNESOTA

SIGNATURE: Tejpal S. Bala TYPED OR PRINTED NAME: Tejpal Singh Bala
DATE 12/4/2017 LIC. NO. 49574

BOLTON & MENK
www.bolton-menk.com

REV.	BY	DATE
A	CAL	12/4/2017

CITY OF WINDOM, MINNESOTA
2017 WASTEWATER TREATMENT FACILITY IMPROVEMENTS
CHLORINE CONTACT BASIN & POST-AERATION TANK
PLAN & SECTIONS

SHEET 5.26

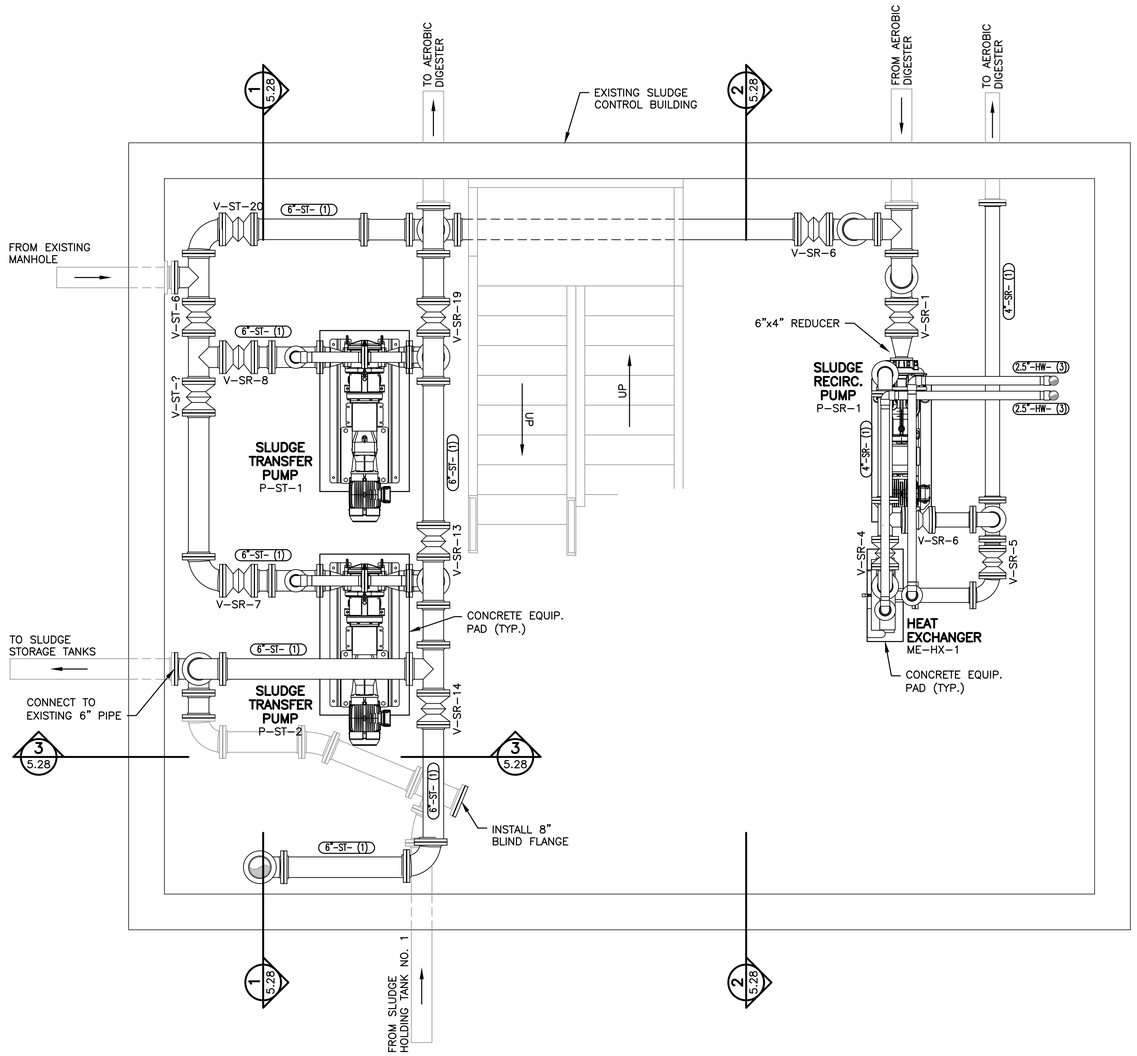

LOWER LEVEL PLAN

SCALE: 1/4"=1'-0"

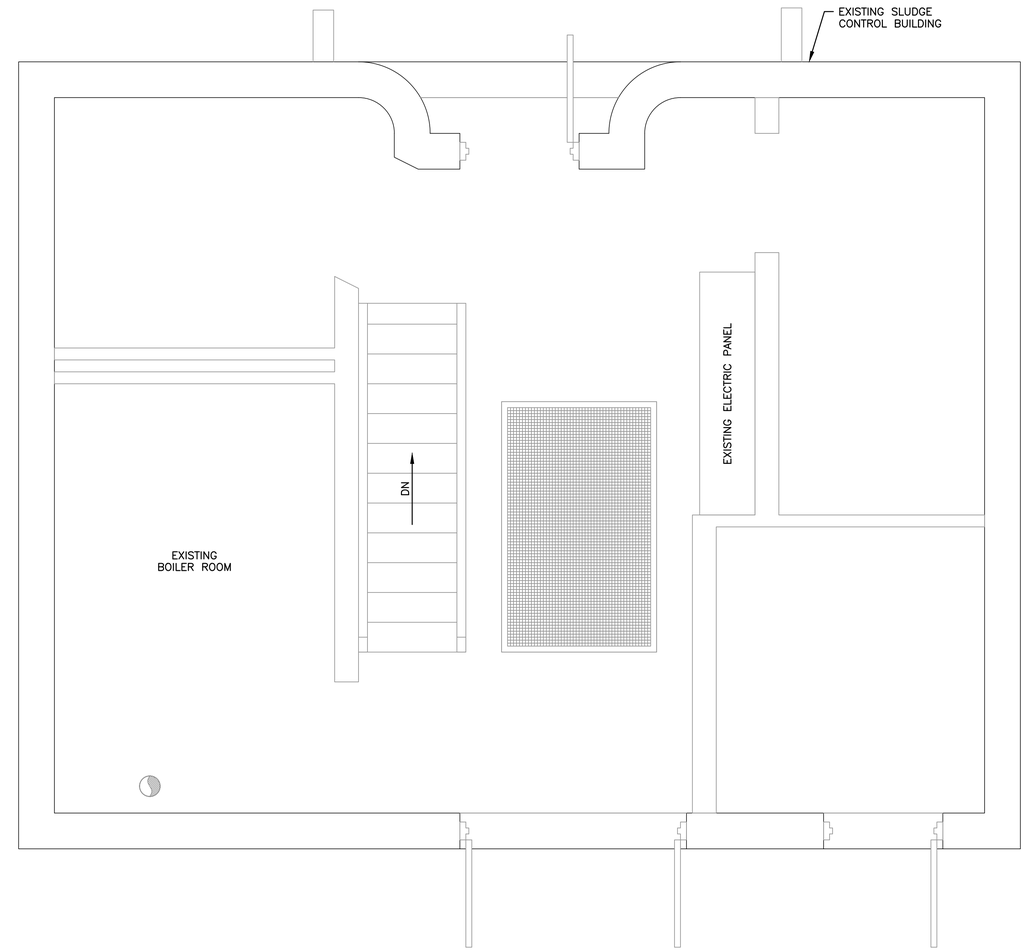

MAIN LEVEL PLAN

SCALE: 1/4"=1'-0"

SCALES SHOWN ON DRAWINGS ARE FOR 24"x36" SIZE SHEETS ONLY. DRAWINGS PLOTTED ON ANY OTHER SIZE SHEETS NEED TO HAVE SCALES ADJUSTED ACCORDINGLY

0 1 2 3 4 6
Graphic Scale for 1/2"=1'-0"

© Bolton & Menk, Inc. 2018, All Rights Reserved
H:\WIND\T22113672\CAD\ENV\Plant 3D\Windom WWTF\Windom WWTF\Orthos\DWGs\Sludge Control Building_Plan Sheet.dwg 5/8/2018 6:47 PM

I HEREBY CERTIFY THAT THIS PLAN, SPECIFICATION OR REPORT WAS PREPARED BY ME OR UNDER MY DIRECT SUPERVISION, AND THAT I AM A DULY LICENSED PROFESSIONAL ENGINEER UNDER THE LAWS OF THE STATE OF MINNESOTA

SIGNATURE: _____ TYPED OR PRINTED NAME: Tejpal Singh Bala

DATE 12/4/2017 LIC. NO. 49574

BOLTON & MENK

www.bolton-menk.com

REV.	BY	DATE
A	CAL	12/4/2017

CITY OF WINDOM, MINNESOTA

2017 WASTEWATER TREATMENT FACILITY IMPROVEMENTS

EXISTING SLUDGE CONTROL BUILDING
PROPOSED MODIFICATIONS – PLANS

SHEET 5.27

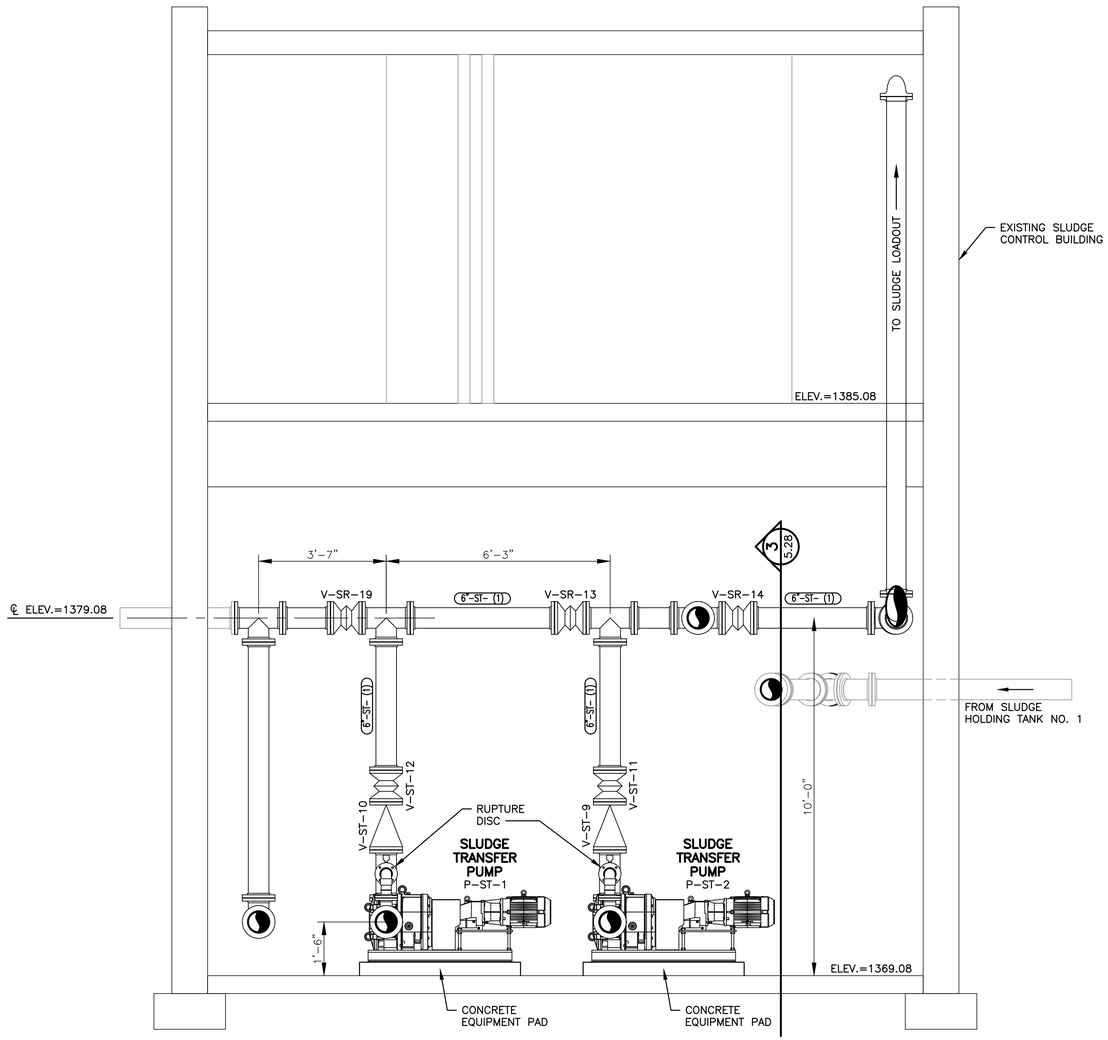

1 / 5.27 SECTION
SCALE: 1/2"=1'-0"

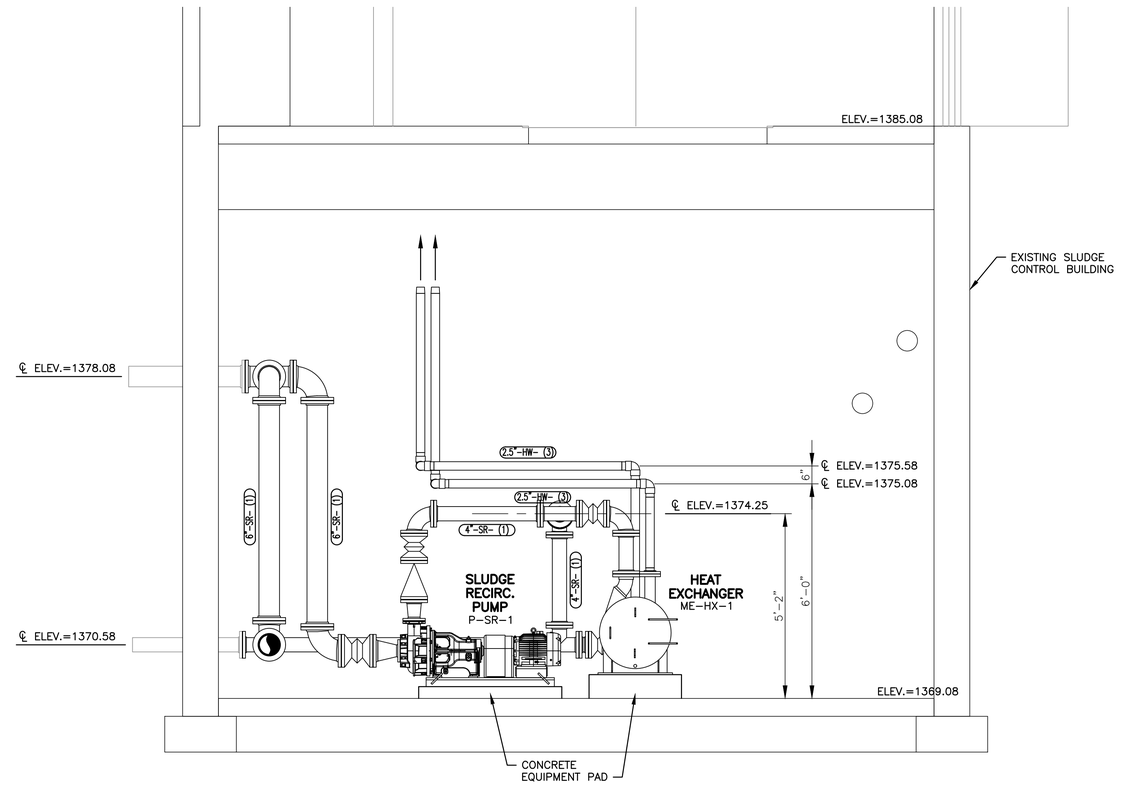

2 / 5.27 SECTION
SCALE: 1/2"=1'-0"

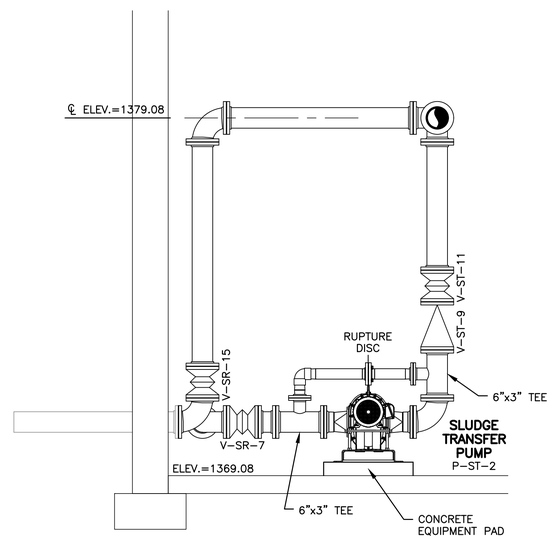

3 / 5.28 SECTION
SCALE: 1/2"=1'-0"

SCALES SHOWN ON DRAWINGS ARE FOR 24"x36" SIZE SHEETS ONLY. DRAWINGS PLOTTED ON ANY OTHER SIZE SHEETS NEED TO HAVE SCALES ADJUSTED ACCORDINGLY

© Bolton & Menk, Inc. 2018, All Rights Reserved
H:\WIND\T22113672\CAD\ENV\Plant 3D\Windom WWTF\Windom WWTF\Orthos\DWGs\Sludge Control Building_Section Sheet.dwg 5/8/2018 6:48 PM

0 1 2 3 4 6
Graphic Scale for 1/2"=1'-0"

I HEREBY CERTIFY THAT THIS PLAN, SPECIFICATION OR REPORT WAS PREPARED BY ME OR UNDER MY DIRECT SUPERVISION, AND THAT I AM A DULY LICENSED PROFESSIONAL ENGINEER UNDER THE LAWS OF THE STATE OF MINNESOTA

SIGNATURE: _____ TYPED OR PRINTED NAME: Tejpal Singh Bala
DATE 12/4/2017 LIC. NO. 49574

BOLTON & MENK
www.bolton-menk.com

REV.	BY	DATE
A	CAL	12/4/2017

CITY OF WINDOM, MINNESOTA
2017 WASTEWATER TREATMENT FACILITY IMPROVEMENTS
EXISTING SLUDGE CONTROL BUILDING
PROPOSED MODIFICATIONS – SECTIONS

SHEET
5.28

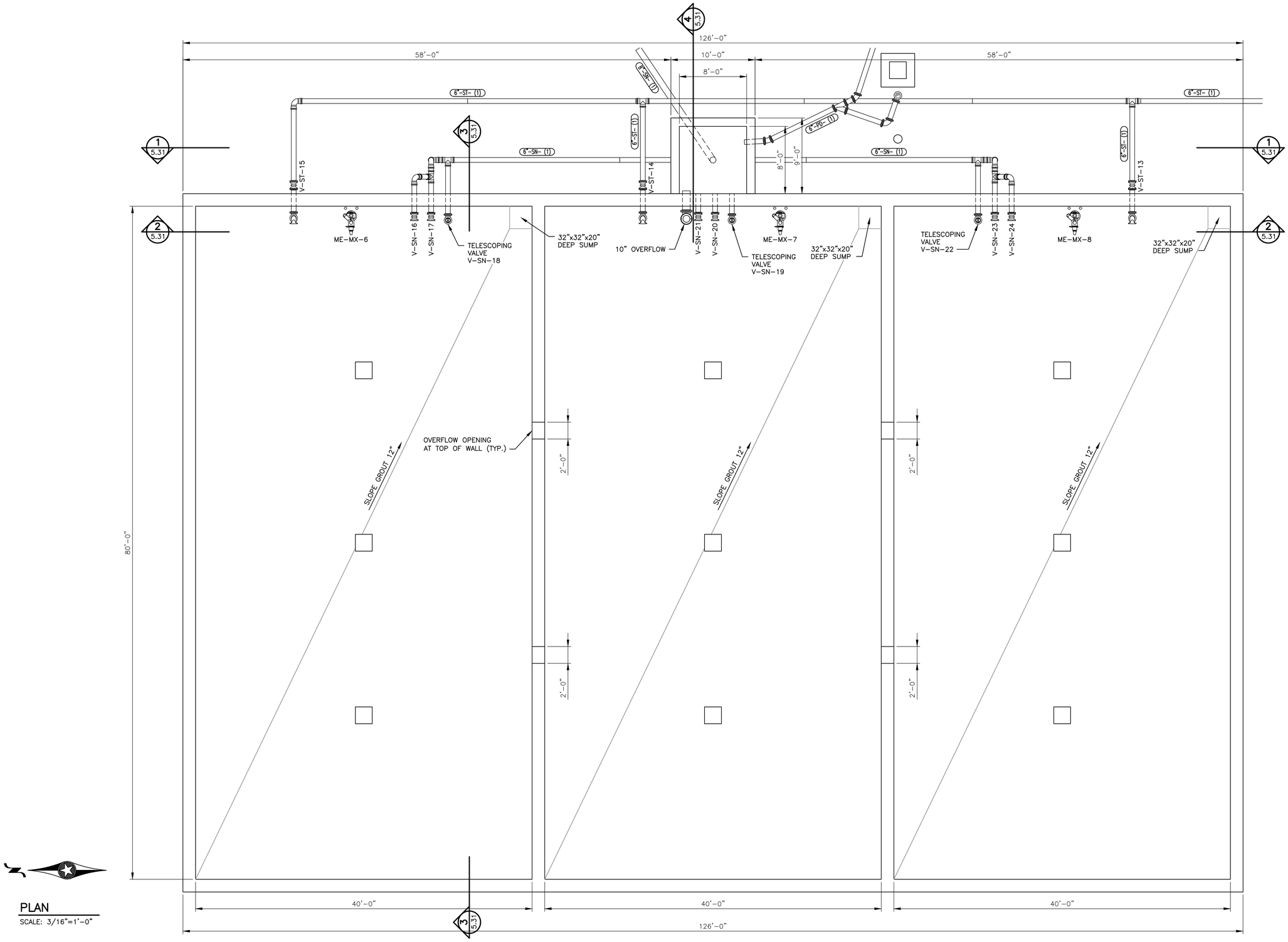

PLAN

SCALE: 3/16"=1'-0"

SCALES SHOWN ON DRAWINGS ARE FOR 24"x36" SIZE SHEETS ONLY. DRAWINGS PLOTTED ON ANY OTHER SIZE SHEETS NEED TO HAVE SCALES ADJUSTED ACCORDINGLY

0 2 4 6 8 12 16

Graphic Scale for 3/16"=1'-0"

© Bolton & Menk, Inc. 2017, All Rights Reserved

H:\WIND\T22113672\CAD\ENV\Plant 3D\Windom WWTF\Windom WWTF\Orthos\DWGs\Biosolids Storage Tank_Plan Sheet1.dwg 12/7/2017 6:09 PM

I HEREBY CERTIFY THAT THIS PLAN, SPECIFICATION OR REPORT WAS PREPARED BY ME OR UNDER MY DIRECT SUPERVISION, AND THAT I AM A DULY LICENSED PROFESSIONAL ENGINEER UNDER THE LAWS OF THE STATE OF MINNESOTA

SIGNATURE: Tejpal S. Bala TYPED OR PRINTED NAME: Tejpal Singh Bala

DATE 12/4/2017 LIC. NO. 49574

BOLTON & MENK

www.bolton-menk.com

REV.	BY	DATE
A	CAL	12/4/2017

CITY OF WINDOM, MINNESOTA

2017 WASTEWATER TREATMENT FACILITY IMPROVEMENTS

BIOSOLIDS STORAGE TANK

PLAN

SHEET 5.29

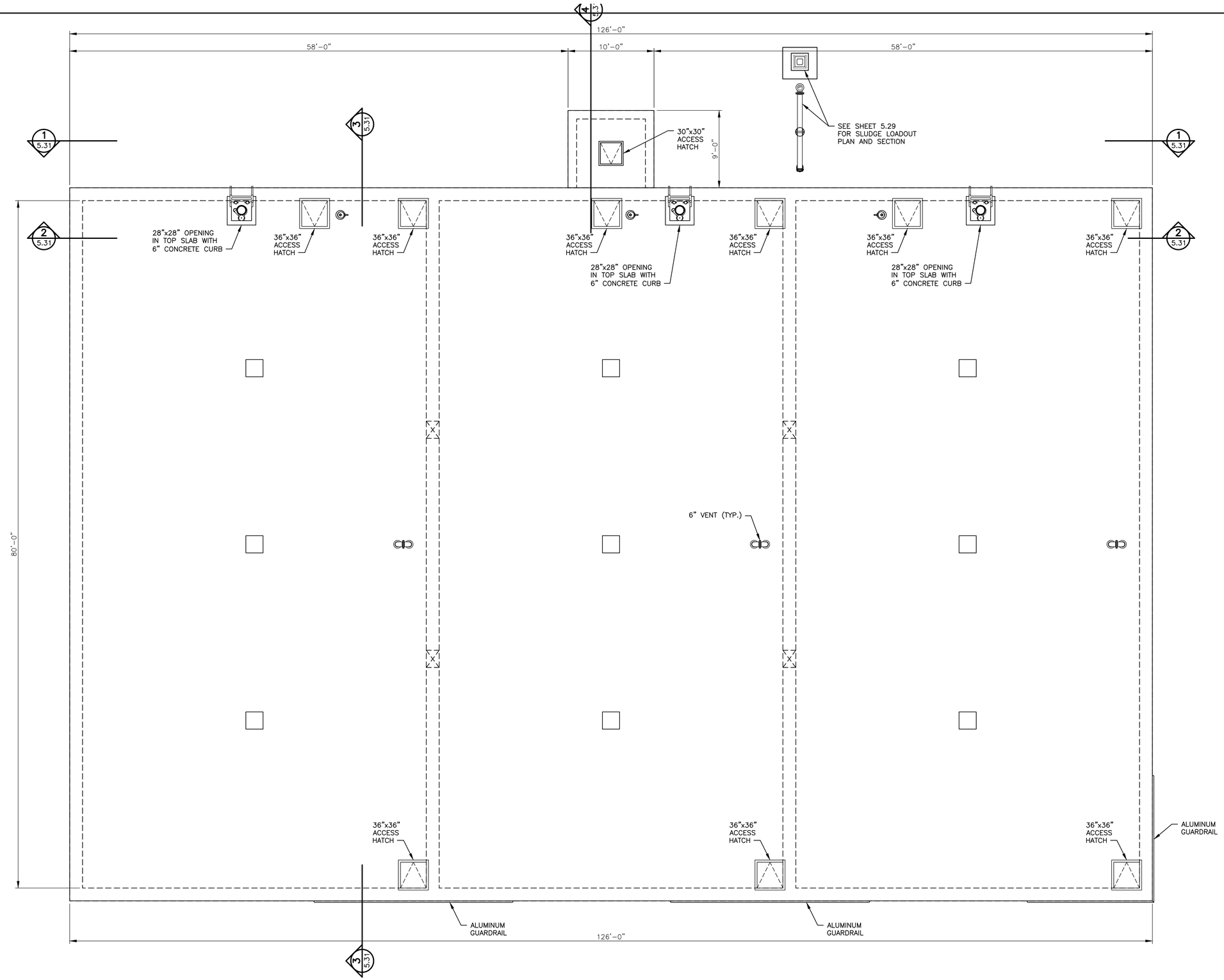

TOP PLAN

SCALE: 3/16"=1'-0"

SCALES SHOWN ON DRAWINGS ARE FOR 24"x36" SIZE SHEETS ONLY. DRAWINGS PLOTTED ON ANY OTHER SIZE SHEETS NEED TO HAVE SCALES ADJUSTED ACCORDINGLY

0 2 4 6 8 12 16

Graphic Scale for 3/16"=1'-0"

© Bolton & Menk, Inc. 2017, All Rights Reserved

H:\WIND\T22113672\CAD\ENV\Plant 3D\Windom WWTF\Windom WWTF\Orthos\DWGs\Biosolids Storage Tank_Plan Sheet2.dwg 12/7/2017 6:09 PM

I HEREBY CERTIFY THAT THIS PLAN, SPECIFICATION OR REPORT WAS PREPARED BY ME OR UNDER MY DIRECT SUPERVISION, AND THAT I AM A DULY LICENSED PROFESSIONAL ENGINEER UNDER THE LAWS OF THE STATE OF MINNESOTA

SIGNATURE: Tejpal S. Bala TYPED OR PRINTED NAME: Tejpal Singh Bala

DATE 12/4/2017 LIC. NO. 49574

BOLTON & MENK

www.bolton-menk.com

REV.	BY	DATE
A	CAL	12/4/2017

CITY OF WINDOM, MINNESOTA

2017 WASTEWATER TREATMENT FACILITY IMPROVEMENTS

BIOSOLIDS STORAGE TANK
TOP PLAN

SHEET 5.30

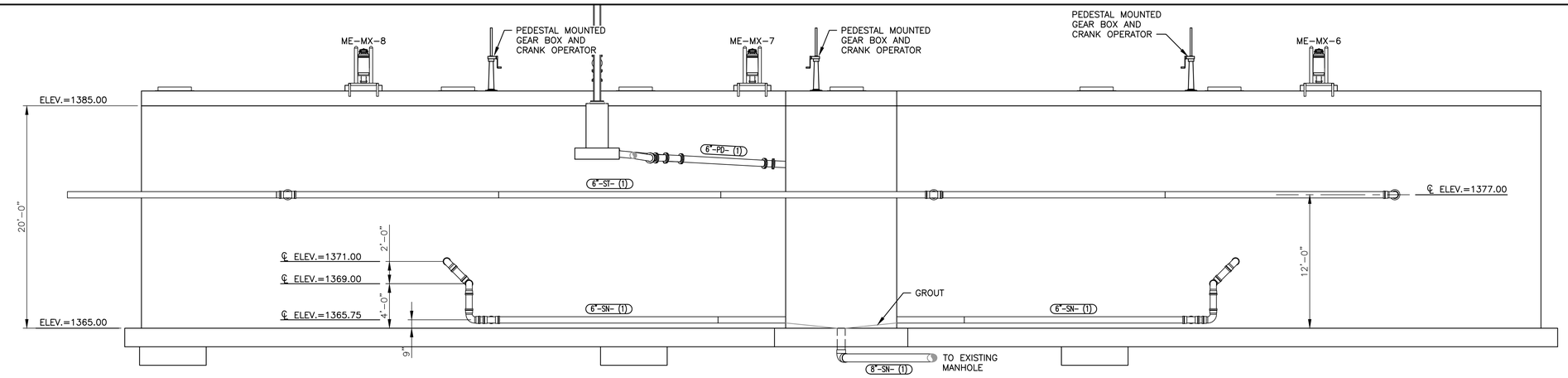

1 5.29 SECTION
SCALE: 3/16"=1'-0"

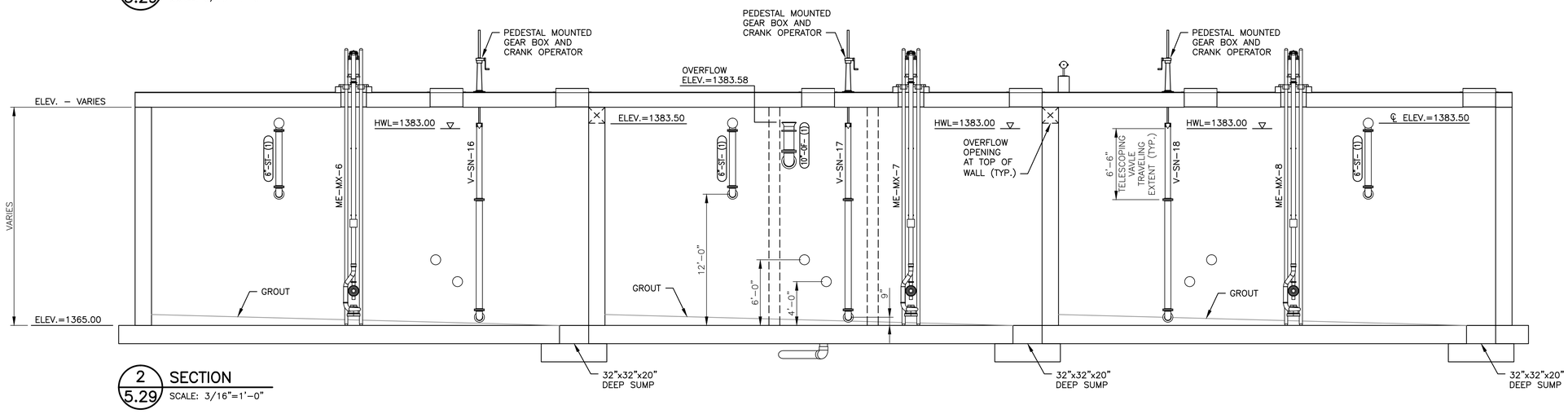

2 5.29 SECTION
SCALE: 3/16"=1'-0"

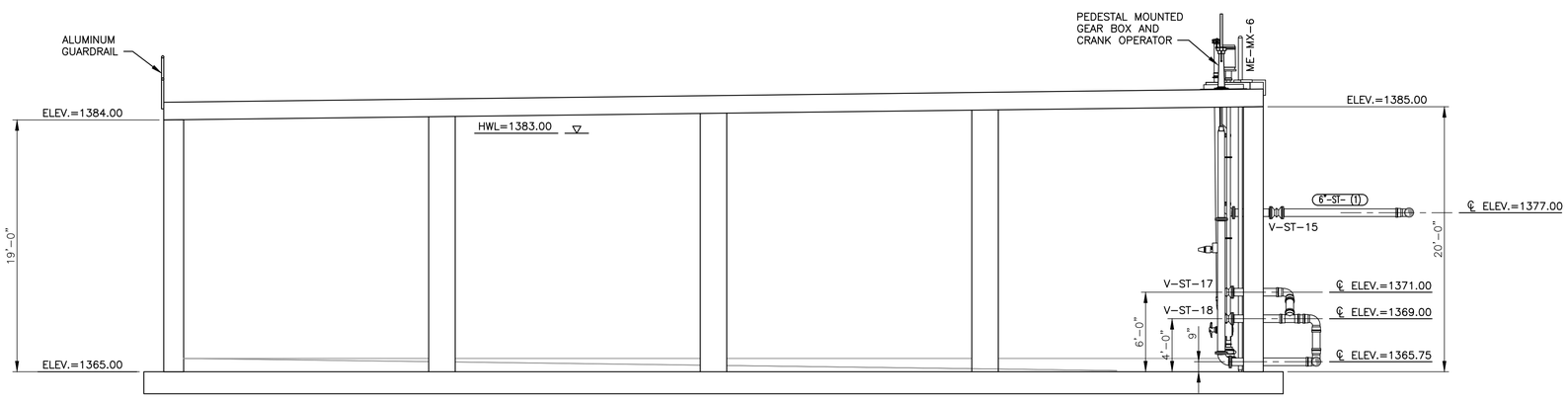

3 5.29 SECTION
SCALE: 3/16"=1'-0"

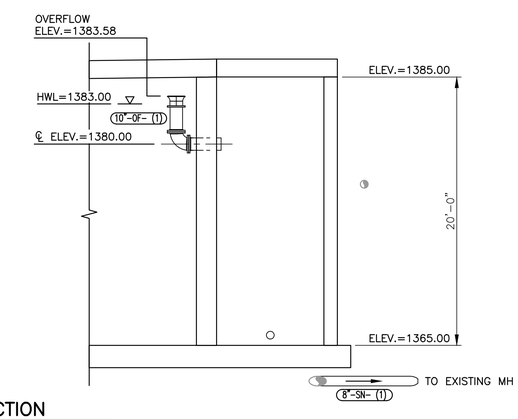

4 5.29 SECTION
SCALE: 3/16"=1'-0"

SCALES SHOWN ON DRAWINGS ARE FOR 24"x36" SIZE SHEETS ONLY. DRAWINGS PLOTTED ON ANY OTHER SIZE SHEETS NEED TO HAVE SCALES ADJUSTED ACCORDINGLY

0 2 4 6 8 12 16
Graphic Scale for 3/16"=1'-0"

© Bolton & Menk, Inc. 2017, All Rights Reserved
H:\WIND\T221113672\CAD\ENV\Plant 3D\Windom WWTF\Windom WWTF\Orthos\DWGs\Biosolids Storage Tank_Section Sheet.dwg 12/7/2017 6:09 PM

I HEREBY CERTIFY THAT THIS PLAN, SPECIFICATION OR REPORT WAS PREPARED BY ME OR UNDER MY DIRECT SUPERVISION, AND THAT I AM A DULY LICENSED PROFESSIONAL ENGINEER UNDER THE LAWS OF THE STATE OF MINNESOTA

SIGNATURE: Tejpal S. Bala TYPED OR PRINTED NAME: Tejpal Singh Bala
DATE 12/4/2017 LIC. NO. 49574

BOLTON & MENK
www.bolton-menk.com

REV.	BY	DATE
A	CAL	12/4/2017

CITY OF WINDOM, MINNESOTA
2017 WASTEWATER TREATMENT FACILITY IMPROVEMENTS
BIOSOLIDS STORAGE TANK
SECTIONS

SHEET 5.31

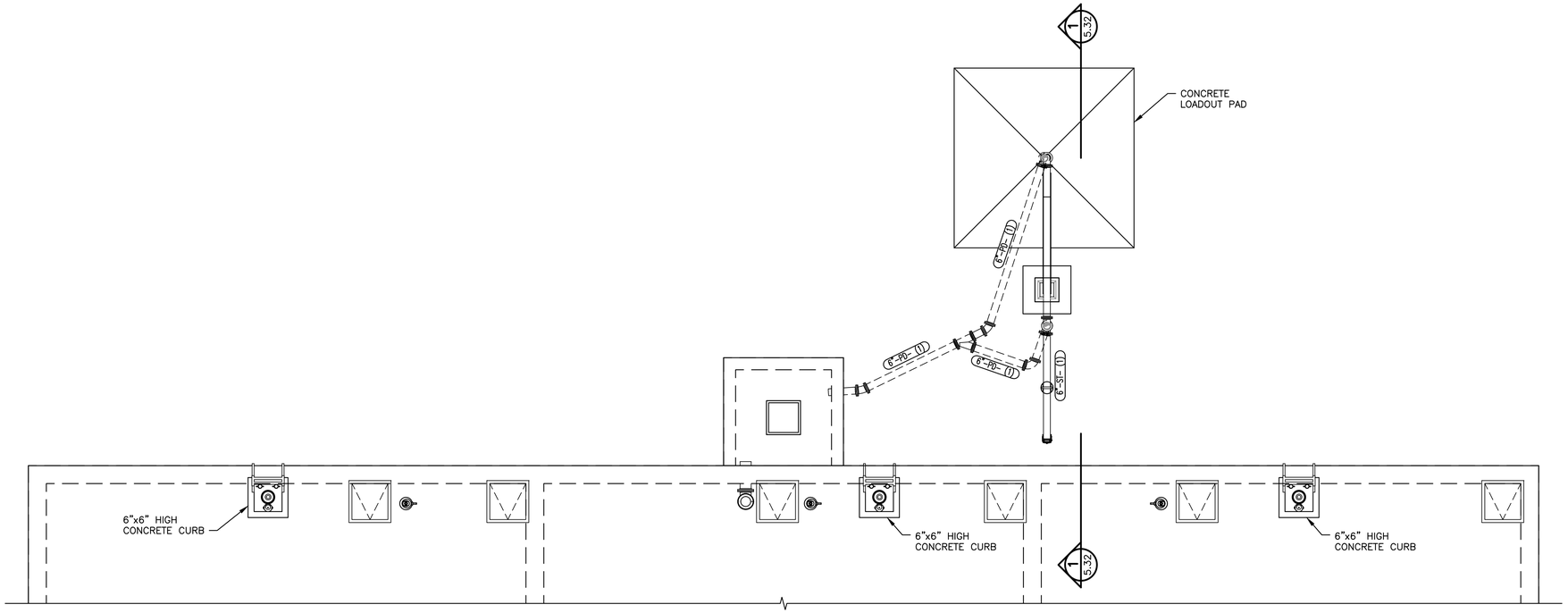

LOADOUT PLAN

SCALE: 3/16"=1'-0"

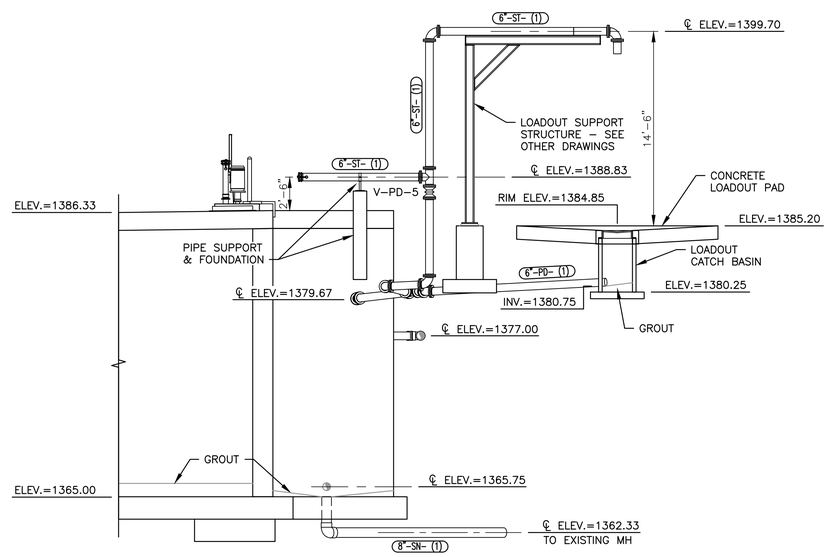

1
5.32
SECTION

SCALE: 3/16"=1'-0"

SCALES SHOWN ON DRAWINGS ARE FOR
24"x36" SIZE SHEETS ONLY. DRAWINGS
PLOTTED ON ANY OTHER SIZE SHEETS
NEED TO HAVE SCALES ADJUSTED ACCORDINGLY

© Bolton & Menk, Inc. 2017, All Rights Reserved
H:\WIND\T22113672\CAD\ENV\Plant 3D\Windom WWTF\Windom WWTF\Orthos\DWGs\Biosolids Storage Tank-Loadout_Plan and Section.dwg 12/7/2017 6:09 PM

0 2 4 6 8 12 16
Graphic Scale for 3/16"=1'-0"

I HEREBY CERTIFY THAT THIS PLAN, SPECIFICATION OR REPORT WAS PREPARED BY ME OR UNDER MY DIRECT SUPERVISION, AND THAT I AM A DULY LICENSED PROFESSIONAL ENGINEER UNDER THE LAWS OF THE STATE OF MINNESOTA

SIGNATURE: Tejpal S. Bala TYPED OR PRINTED NAME: Tejpal Singh Bala
DATE 12/4/2017 LIC. NO. 49574

BOLTON & MENK
www.bolton-menk.com

REV.	BY	DATE
A	CAL	12/4/2017

CITY OF WINDOM, MINNESOTA
2017 WASTEWATER TREATMENT FACILITY IMPROVEMENTS
BIOSOLIDS STORAGE TANK LOADOUT
PLAN & SECTION

SHEET
5.32

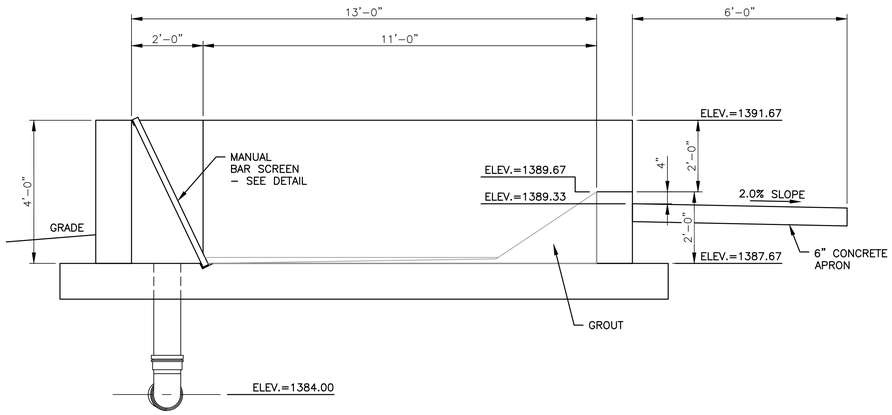

1 / 5.33 SECTION
SCALE: 1/2"=1'-0"

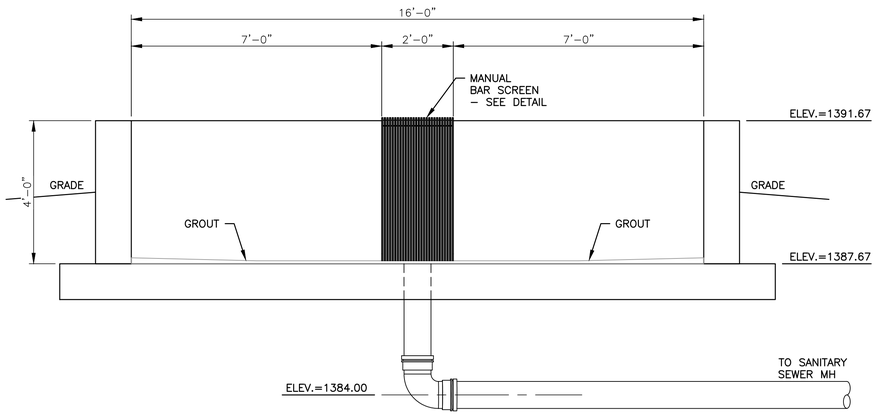

2 / 5.33 SECTION
SCALE: 1/2"=1'-0"

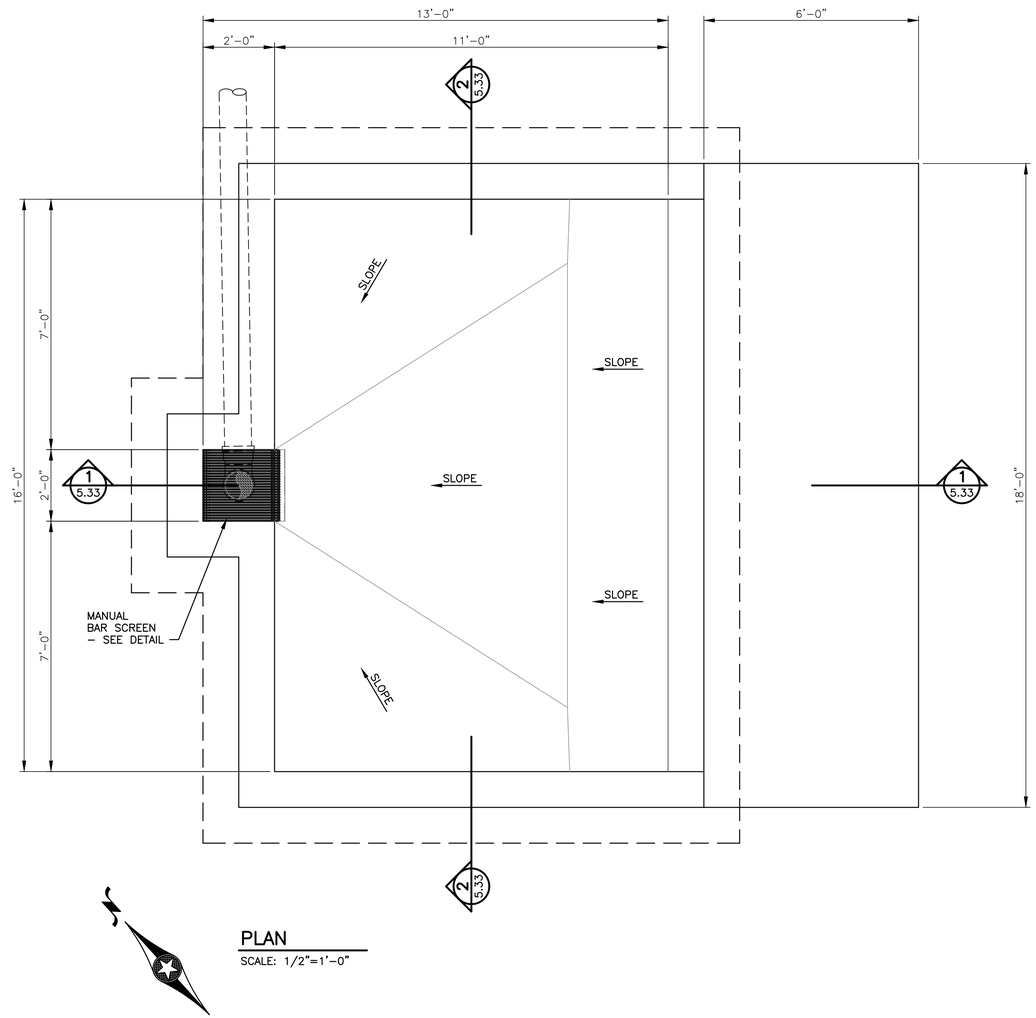

PLAN
SCALE: 1/2"=1'-0"

SCALES SHOWN ON DRAWINGS ARE FOR 24"x36" SIZE SHEETS ONLY. DRAWINGS PLOTTED ON ANY OTHER SIZE SHEETS NEED TO HAVE SCALES ADJUSTED ACCORDINGLY

© Bolton & Menk, Inc. 2018, All Rights Reserved
H:\WIND\T22113672\CAD\ENV\Plant 3D\Windom WWTF\Windom WWTF\Orthos\DWGs\Vac Truck Receiving_Plan Sheet.dwg 5/4/2018 11:52 AM

I HEREBY CERTIFY THAT THIS PLAN, SPECIFICATION OR REPORT WAS PREPARED BY ME OR UNDER MY DIRECT SUPERVISION, AND THAT I AM A DULY LICENSED PROFESSIONAL ENGINEER UNDER THE LAWS OF THE STATE OF MINNESOTA

SIGNATURE: _____ TYPED OR PRINTED NAME: Tejpal Singh Bala
DATE 12/4/2017 LIC. NO. 49574

BOLTON & MENK
www.bolton-menk.com

REV.	BY	DATE
A	CAL	12/4/2017

CITY OF WINDOM, MINNESOTA
2017 WASTEWATER TREATMENT FACILITY IMPROVEMENTS
VACUUM TRUCK RECEIVING STATION
PLAN AND SECTIONS

SHEET 5.33

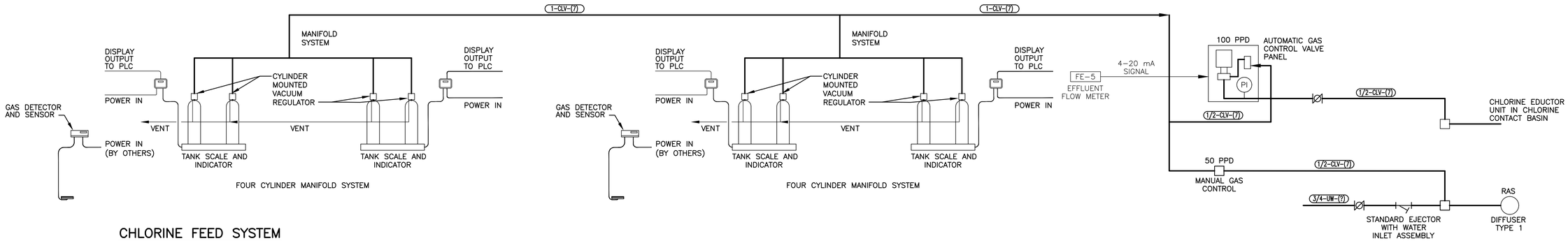

CHLORINE FEED SYSTEM

NOT TO SCALE

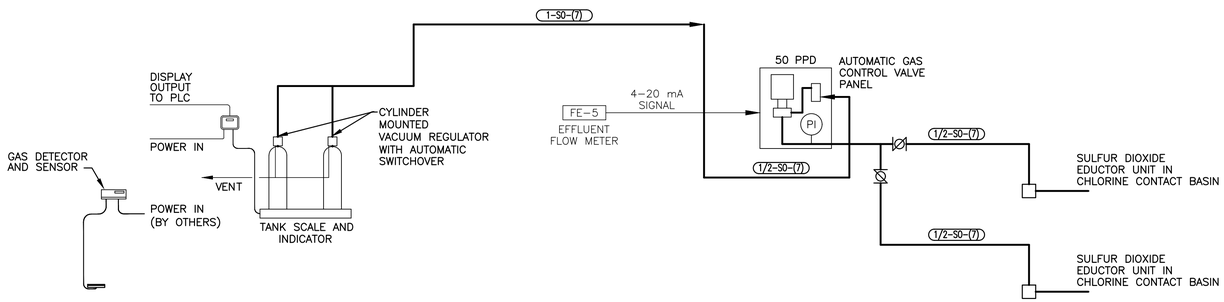

SO_2 FEED SYSTEM

NOT TO SCALE

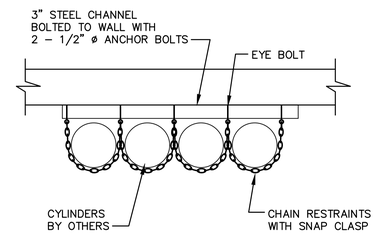

CYLINDER STORAGE RACK

NOT TO SCALE

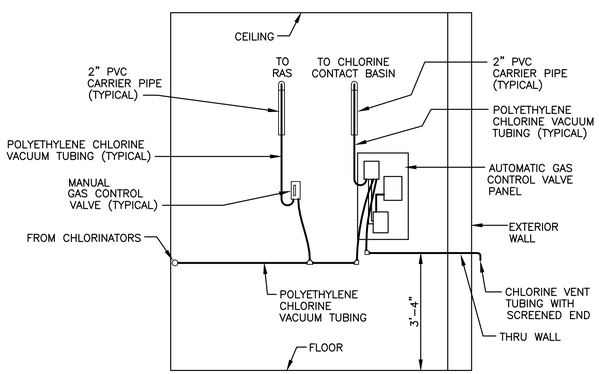

ELEVATION-CHLORINE FEEDER

NOT TO SCALE

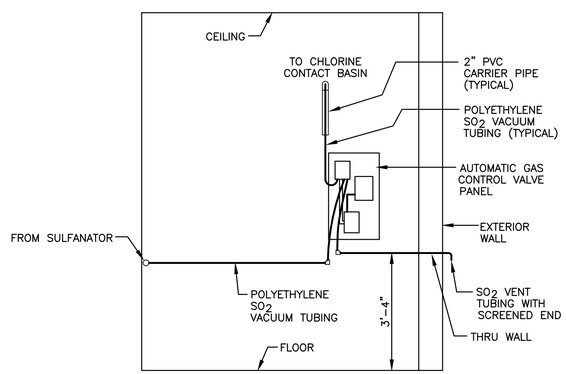

ELEVATION-SO_2 FEEDER

NOT TO SCALE

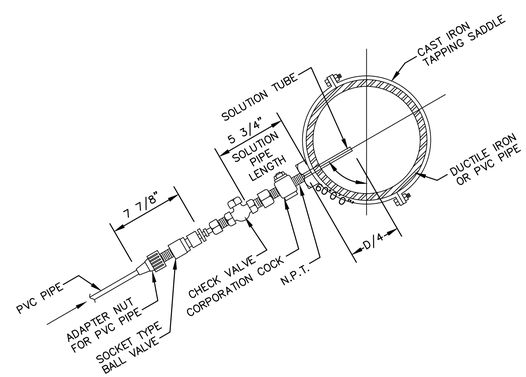

DIFFUSER TYPE 1

NOT TO SCALE

NOTE: SEE SHEET 1.04 FOR PIPE MATERIAL

SCALES SHOWN ON DRAWINGS ARE FOR 24"x36" SIZE SHEETS ONLY. DRAWINGS PLOTTED ON ANY OTHER SIZE SHEETS NEED TO HAVE SCALES ADJUSTED ACCORDINGLY

© Bolton & Menk, Inc. 2018, All Rights Reserved
H:\WIND\T22113672\CAD\ENV\113672_D_BASE_CHEMICAL-FEED.DWG 5/4/2018 8:38:12 AM

I HEREBY CERTIFY THAT THIS PLAN, SPECIFICATION OR REPORT WAS PREPARED BY ME OR UNDER MY DIRECT SUPERVISION, AND THAT I AM A DULY LICENSED PROFESSIONAL ENGINEER UNDER THE LAWS OF THE STATE OF MINNESOTA

SIGNATURE: _____ TYPED OR PRINTED NAME: Tejpal Singh Bala

DATE 12/4/2017 LIC. NO. 49574

BOLTON & MENK

www.bolton-menk.com

REV.	BY	DATE
A	CAL	12/4/2017

CITY OF WINDOM, MINNESOTA

2017 WASTEWATER TREATMENT FACILITY IMPROVEMENTS

CHEMICAL FEED SCHEMATICS

SHEET 5.34

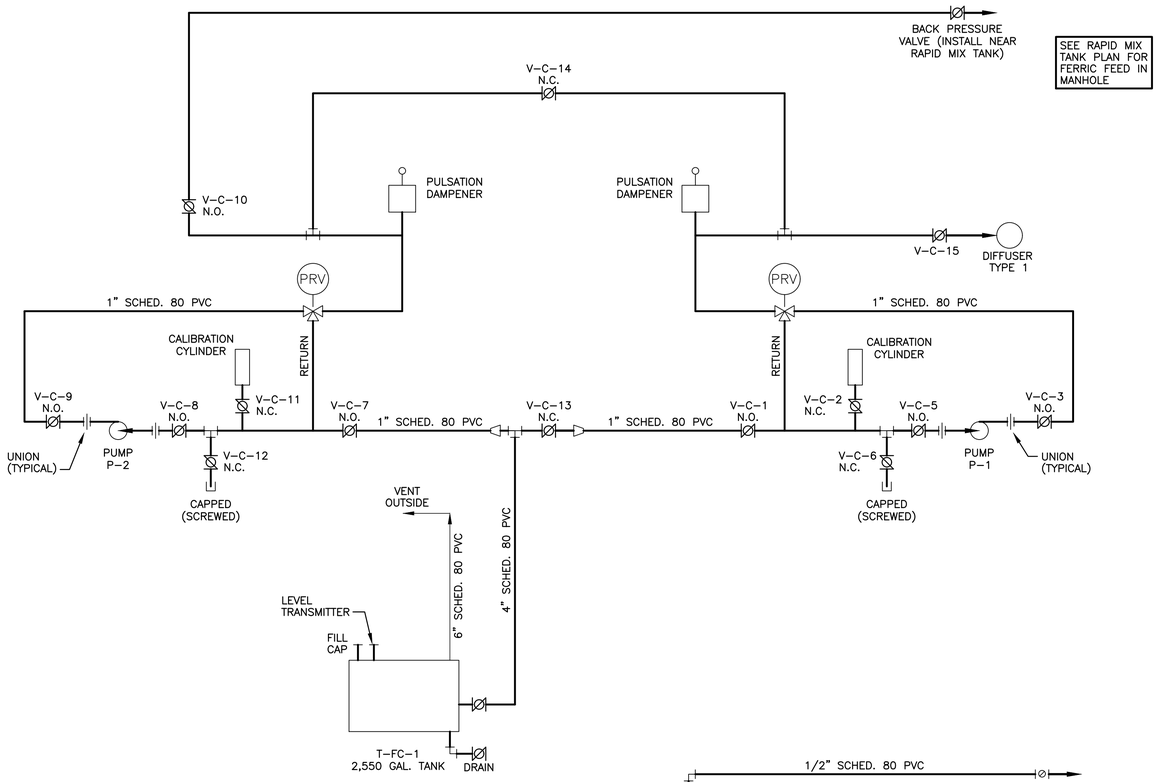

FERRIC CHLORIDE PIPING SCHEMATIC

NOT TO SCALE

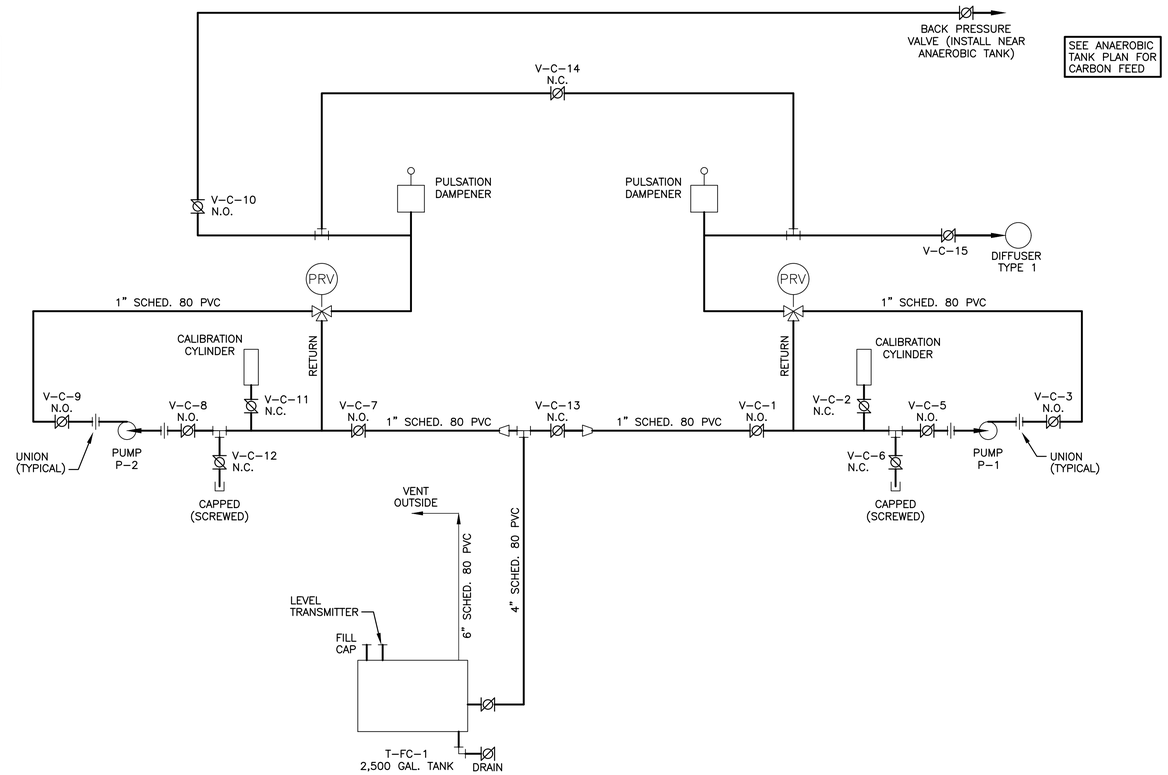

CARBON PIPING SCHEMATIC

NOT TO SCALE

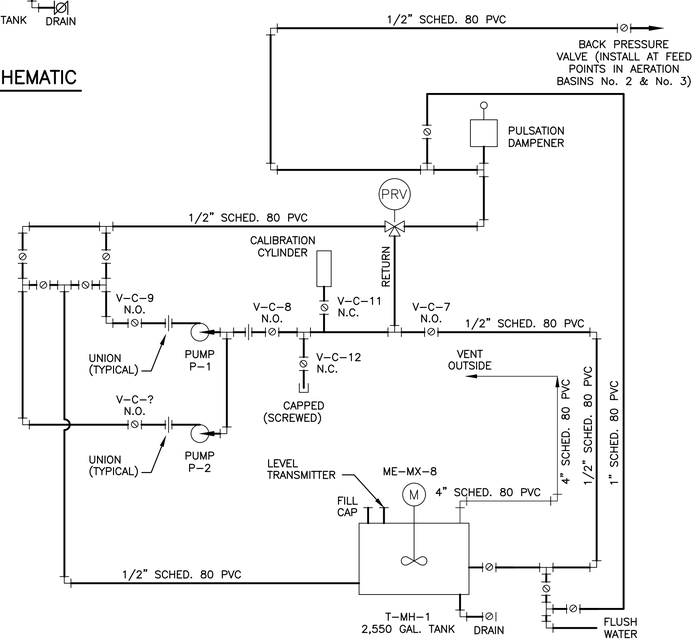

MAGNESIUM HYDROXIDE PIPING SCHEMATIC

NOT TO SCALE

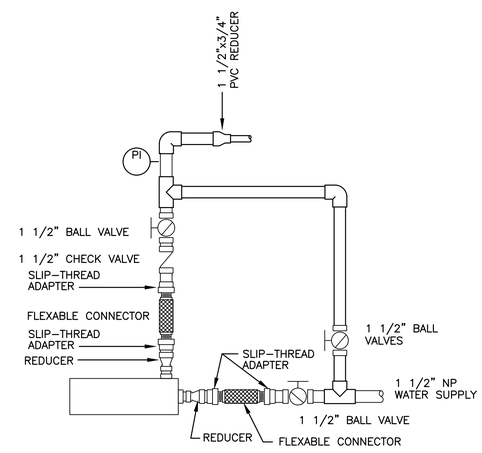

BOOSTER PUMP DETAIL

NO SCALE

PI PRESSURE/VACUUM INDICATOR

SCALES SHOWN ON DRAWINGS ARE FOR 24"x36" SIZE SHEETS ONLY. DRAWINGS PLOTTED ON ANY OTHER SIZE SHEETS NEED TO HAVE SCALES ADJUSTED ACCORDINGLY

© Bolton & Menk, Inc. 2018, All Rights Reserved
H:\WIND\T22113672\CAD\ENV\113672_D_BASE_CHEMICAL-FEED.DWG 5/4/2018 8:38:12 AM

I HEREBY CERTIFY THAT THIS PLAN, SPECIFICATION OR REPORT WAS PREPARED BY ME OR UNDER MY DIRECT SUPERVISION, AND THAT I AM A DULY LICENSED PROFESSIONAL ENGINEER UNDER THE LAWS OF THE STATE OF MINNESOTA

SIGNATURE: _____ TYPED OR PRINTED NAME: Tejpal Singh Bala

DATE 12/4/2017 LIC. NO. 49574

BOLTON & MENK

www.bolton-menk.com

REV.	BY	DATE
A	CAL	12/4/2017

CITY OF WINDOM, MINNESOTA

2017 WASTEWATER TREATMENT FACILITY IMPROVEMENTS

CHEMICAL FEED SCHEMATICS

SHEET 5.35

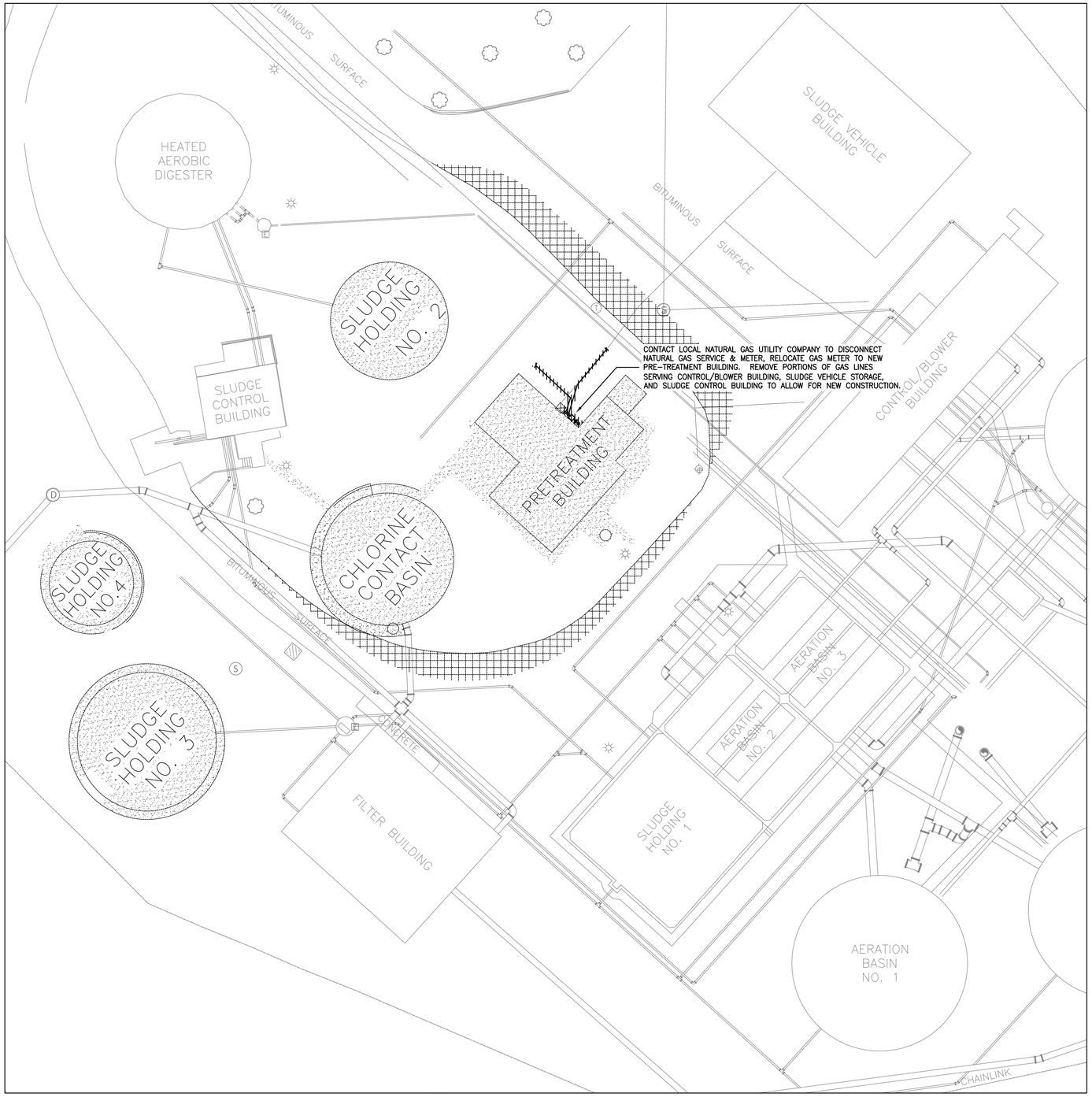

N

SITE PLAN - DEMOLITION

SCALE: 1/4" = 1'-0" 0' 2' 4' 8'
GRAPH SCALE

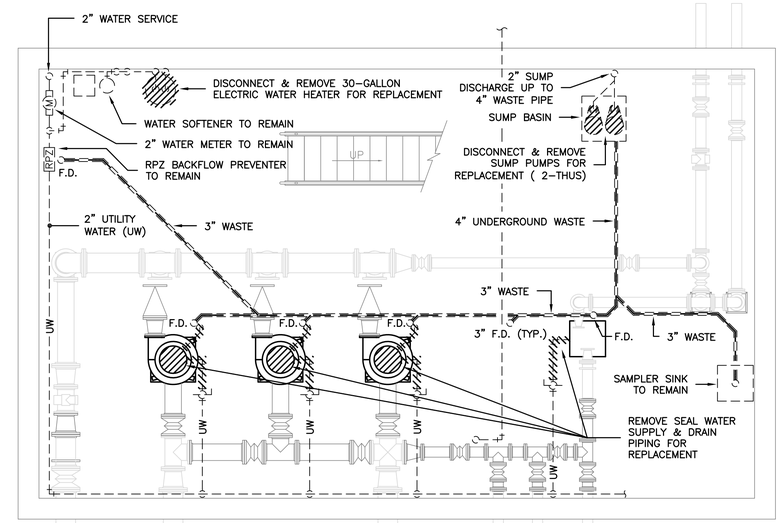

N

EXISTING CONTRO/BLOWER BUILDING LOWER FLOOR PLAN - PLUMBING DEMOLITION

SCALE: 1/4" = 1'-0"
0' 2' 4' 8'
GRAPH SCALE

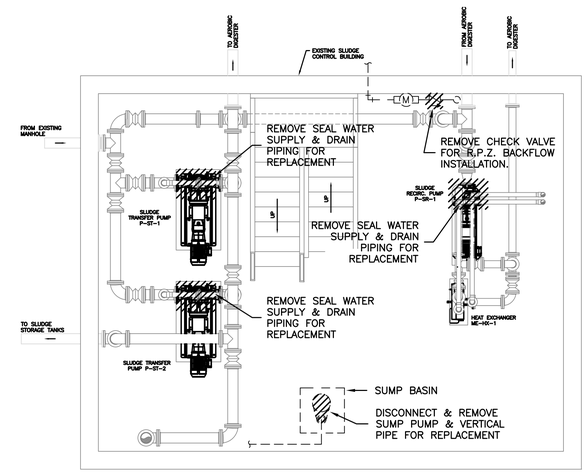

N

EXISTING SLUDGE CONTROL BUILDING LOWER FLOOR PLAN - PLUMBING DEMOLITION

SCALE: 1/4" = 1'-0"
0' 2' 4' 8'
GRAPH SCALE

SCALES SHOWN ON DRAWINGS ARE FOR 24"x36" SIZE SHEETS ONLY. DRAWINGS PLOTTED ON ANY OTHER SIZE SHEETS NEED TO HAVE SCALES ADJUSTED ACCORDINGLY

© Bolton & Menk, Inc. 2017, All Rights Reserved

0 1 2 3 6 8 12
Graphic Scale for 1/2"=1'-0"

Dolejs Associates, Inc.
Consulting Engineers
1624 N. Riverfront Dr. Mankato, Minnesota 507-625-7869
17792 Idawood Path Lakeville, Minnesota 952-435-6790

I HEREBY CERTIFY THAT THIS PLAN, SPECIFICATION OR REPORT WAS PREPARED BY ME OR UNDER MY DIRECT SUPERVISION, AND THAT I AM A DULY LICENSED PROFESSIONAL ENGINEER UNDER THE LAWS OF THE STATE OF MINNESOTA

SIGNATURE: TYPED OR PRINTED NAME: Christopher J. Dolejs
DATE 12-04-2017 LIC. NO. 24771

BOLTON & MENK
www.bolton-menk.com

REV.	BY	DATE
A	CJD	12/04/2017

CITY OF WINDOM, MINNESOTA
2017 WASTEWATER TREATMENT FACILITY IMPROVEMENTS
SITE PLAN – EXISTING CONTROL/BLOWER BUILDING & SLUDGE CONTROL BUILDING – PLUMBING DEMOLITION

SHEET 6.01

SUBMERSIBLE PUMP SCHEDULE

PUMP #	LOCATION	SERVES	MYERS MODEL #	GPM	HEAD	RPM	HP	VOLT & PHASE	CONTROL	REMARKS
SP-1	CONTROL BLDG. BASEMENT	FLR. DRAINS	WHR5-11-DS	50	18'	–	1/2	120V. 1Ø	FLOAT	REUSE EXST'G. CONTROL PANEL
SP-2	CONTROL BLDG. BASEMENT	FLR. DRAINS	WHR5-11-DS	50	18'	–	1/2	120V. 1Ø	FLOAT	REUSE EXST'G. CONTROL PANEL
SP-3	SLUDGE CONTROL BLDG.	FLR. DRAINS	WHR5-11-DS	50	18'	–	1/2	120V. 1Ø	FLOAT	20' CORD

ELECTRIC DOMESTIC WATER HEATER SCHEDULE

HEATER #	LOCATION	MFGR.	MODEL #	INPUT	VOLTAGE	IMMERSION HEATERS	RECOVERY GALLONS	STORAGE CAPACITY	REMARKS
DWH-1	CONTROL BLDG. BASEMENT	STATE	ESX-30-DONT	6-KW	240v.	2	21	30	RECONNECT TO CW & HW PIPING

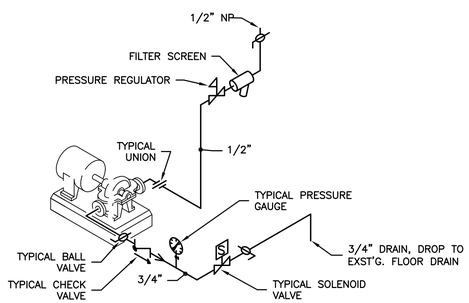

1 / 6.02 TYP. RAS PUMP SEAL WATER DIAGRAM
SCALE: NONE (DIAGRAMMATIC ONLY)

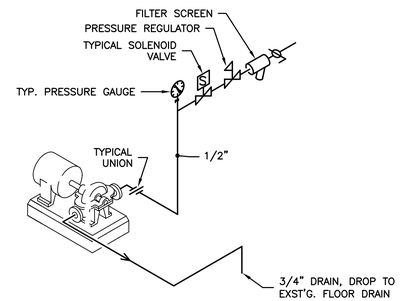

2 / 6.02 TYP. SLUDGE PUMP SEAL WATER DIAGRAM
SCALE: NONE (DIAGRAMMATIC ONLY)

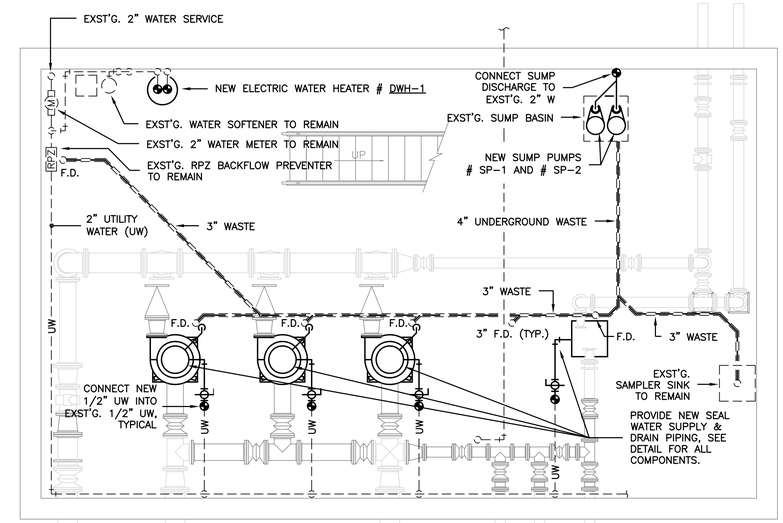

N

EXISTING CONTROL/BLOWER BUILDING LOWER FLOOR PLAN - PLUMBING REMODELED

SCALE: 1/4" = 1'-0"

0' 2' 4' 8'
GRAPH SCALE

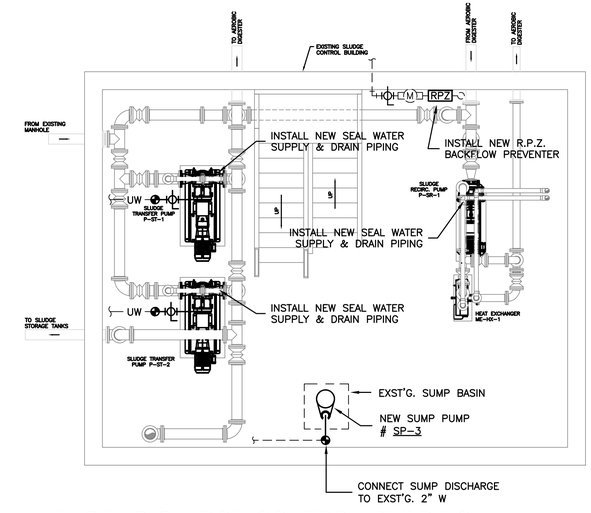

N

EXISTING SLUDGE CONTROL BUILDING LOWER FLOOR PLAN - PLUMBING REMODELED

SCALE: 1/4" = 1'-0"

0' 2' 4' 8'
GRAPH SCALE

SCALES SHOWN ON DRAWINGS ARE FOR 24"x36" SIZE SHEETS ONLY. DRAWINGS PLOTTED ON ANY OTHER SIZE SHEETS NEED TO HAVE SCALES ADJUSTED ACCORDINGLY

© Bolton & Menk, Inc. 2017, All Rights Reserved

0 1 2 3 4 6 8 12
Graphic Scale for 1/2"=1'-0"

Dolejs Associates, Inc. Consulting Engineers
1624 N. Riverfront Dr. Mankato, Minnesota 507-625-7869
17792 Idawood Path Lakeville, Minnesota 952-435-6790

I HEREBY CERTIFY THAT THIS PLAN, SPECIFICATION OR REPORT WAS PREPARED BY ME OR UNDER MY DIRECT SUPERVISION, AND THAT I AM A DULY LICENSED PROFESSIONAL ENGINEER UNDER THE LAWS OF THE STATE OF MINNESOTA

SIGNATURE: TYPED OR PRINTED NAME: Christopher J. Dolejs
DATE 12-04-2017 LIC. NO. 24771

BOLTON & MENK
www.bolton-menk.com

REV.	BY	DATE
A	CJD	12/04/2017

CITY OF WINDOM, MINNESOTA
2017 WASTEWATER TREATMENT FACILITY IMPROVEMENTS
EXISTING CONTROL/BLOWER BUILDING & SLUDGE CONTROL BUILDING – PLUMBING REMODELED

SHEET 6.02

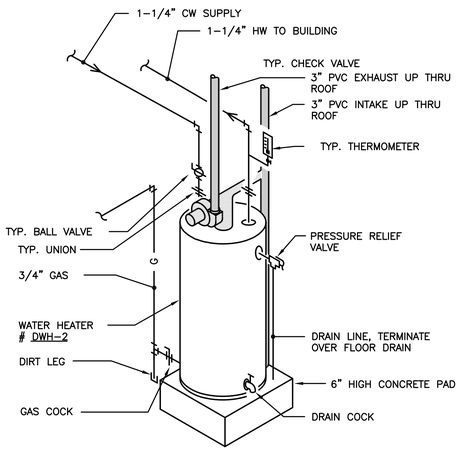

1 / 6.03 **WATER HEATER DETAIL**

SCALE: NONE (DIAGRAMMATIC ONLY)

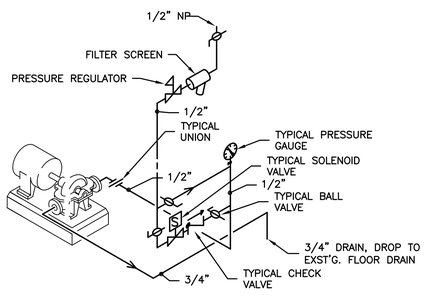

2 / 6.03 **GRIT PUMP SEAL CONNECTION**

SCALE: NONE (DIAGRAMMATIC ONLY)

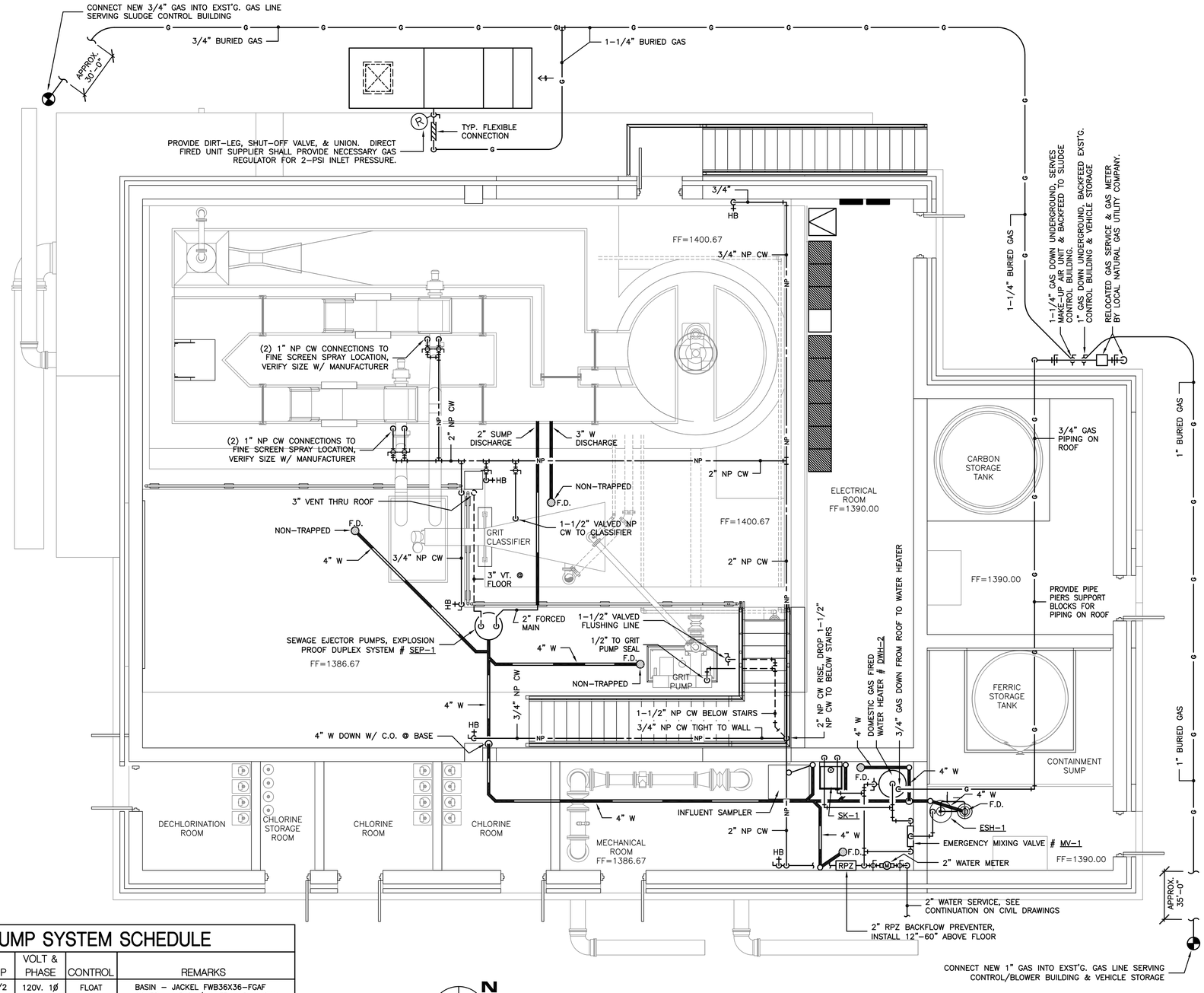

NEW PRE-TREATMENT BUILDING - PLUMBING

SCALE: 1/4" = 1'-0"

0' 2' 4' 8'
GRAPH SCALE

DUPLEX EXPLOSION PROOF SEWAGE EJECTOR PUMP SYSTEM SCHEDULE

PUMP #	LOCATION	SERVES	ZOELLER MODEL #	GPM	HEAD	RPM	HP	VOLT & PHASE	CONTROL	REMARKS
SEP-1	NEW PRE-TREATMENT BUILDING PUMP ROOM	PRE-TREATMENT BLDG.	NX282 (2-THUS)	60	15'	1750	1/2	120V. 1ø	FLOAT	BASIN - JACKEL FWB36X36-FGAF COVER - J36D / INLET HUB - SIH4 PANEL - ALDERON 4200CDGNO CHECK VALVES - 30_0152

GAS DOMESTIC WATER HEATER SCHEDULE

HEATER #	LOCATION	MFGR.	MODEL #	INPUT	OUTPUT	FUEL	EFF. %	FLUE/ PVC	DIA.	RECOVERY @ 100° RISE	STORAGE CAPACITY	FACTORY SUPPLIED OPTIONS
DWH-2	MECH. RM.	A.O. SMITH	BTH-150	150,000	144,000	N. GAS	96	PVC	3"ø	173	100	CONDENSATE NEUTRALIZING KIT # CNS-2 AND CONCENTRIC ROOF VENT KIT

SCALES SHOWN ON DRAWINGS ARE FOR 24"x36" SIZE SHEETS ONLY. DRAWINGS PLOTTED ON ANY OTHER SIZE SHEETS NEED TO HAVE SCALES ADJUSTED ACCORDINGLY

© Bolton & Menk, Inc. 2017, All Rights Reserved

0 1 2 3 4 6 8 12
Graphic Scale for 1/2"=1'-0"

Dolejs Associates, Inc. Consulting Engineers
1624 N. Riverfront Dr. Mankato, Minnesota 507-625-7869
17792 Idawood Path Lakeville, Minnesota 952-435-6790

I HEREBY CERTIFY THAT THIS PLAN, SPECIFICATION OR REPORT WAS PREPARED BY ME OR UNDER MY DIRECT SUPERVISION, AND THAT I AM A DULY LICENSED PROFESSIONAL ENGINEER UNDER THE LAWS OF THE STATE OF MINNESOTA

SIGNATURE: TYPED OR PRINTED NAME: Christopher J. Dolejs
DATE 12-04-2017 LIC. NO. 24771

BOLTON & MENK
www.bolton-menk.com

REV.	BY	DATE
A	CJD	12/04/2017

CITY OF WINDOM, MINNESOTA
2017 WASTEWATER TREATMENT FACILITY IMPROVEMENTS
NEW PRE-TREATMENT BUILDING - PLUMBING

SHEET 6.03

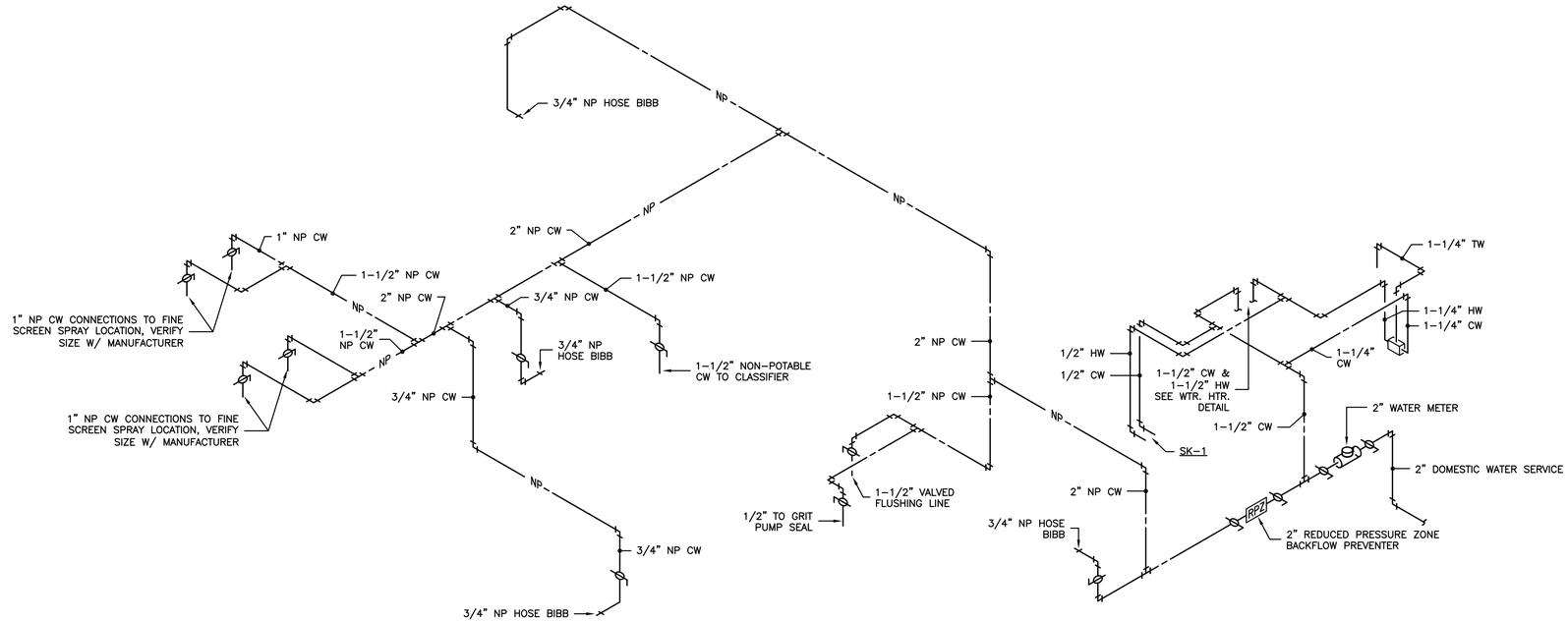

1 / 6.04 PRE-TREATMENT BUILDING WATER RISER

SCALE: NONE (DIAGRAMMATIC ONLY)

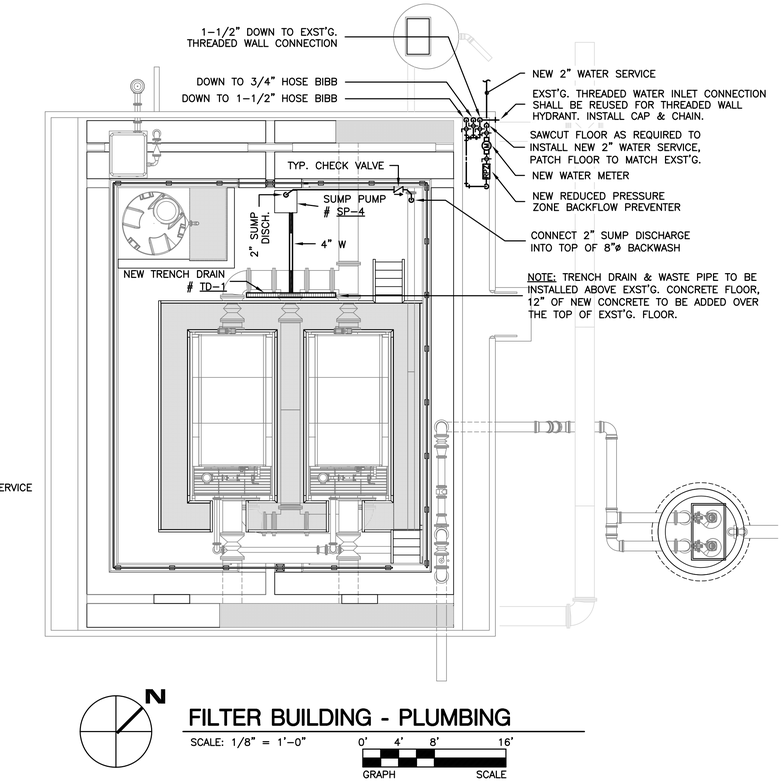

FILTER BUILDING - PLUMBING

SCALE: 1/8" = 1'-0"

SUBMERSIBLE PUMP SCHEDULE

PUMP #	LOCATION	SERVES	MYERS MODEL #	GPM	HEAD	RPM	HP	VOLT & PHASE	CONTROL	REMARKS
SP-4	FILTER BLDG. BASEMENT	TRENCH DRAIN	WHR5-11-DS	50	18'	–	1/2	120V. 1Ø	FLOAT	20' CORD, INSTALL IN EXST'G. SUMP PIT

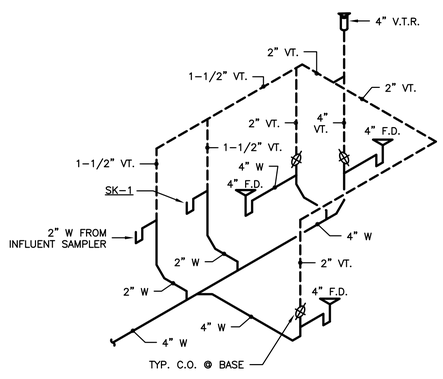

2 / 6.04 PRE-TREATMENT BUILDING PARTIAL WASTE/VENT RISER

SCALE: NONE (DIAGRAMMATIC ONLY)

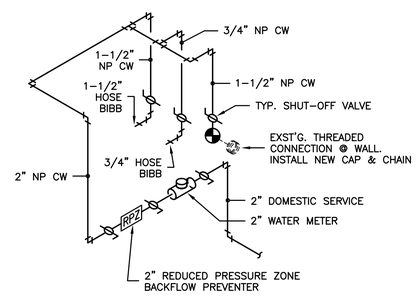

3 / 6.04 FILTER BUILDING WATER RISER

SCALE: NONE (DIAGRAMMATIC ONLY)

SCALES SHOWN ON DRAWINGS ARE FOR 24"x36" SIZE SHEETS ONLY. DRAWINGS PLOTTED ON ANY OTHER SIZE SHEETS NEED TO HAVE SCALES ADJUSTED ACCORDINGLY

© Bolton & Menk, Inc. 2017, All Rights Reserved

0 1 2 3 6 8 12
Graphic Scale for 1/2"=1'-0"

Dolejs Associates, Inc.
Consulting Engineers
1624 N. Riverfront Dr. Mankato, Minnesota 507-625-7869
17792 Idlewood Path Lakeville, Minnesota 952-435-6790

I HEREBY CERTIFY THAT THIS PLAN, SPECIFICATION OR REPORT WAS PREPARED BY ME OR UNDER MY DIRECT SUPERVISION, AND THAT I AM A DULY LICENSED PROFESSIONAL ENGINEER UNDER THE LAWS OF THE STATE OF MINNESOTA

SIGNATURE: TYPED OR PRINTED NAME: Christopher J. Dolejs

DATE 12-04-2017 LIC. NO. 24771

BOLTON & MENK

www.bolton-menk.com

REV.	BY	DATE
A	CJD	12/04/2017

CITY OF WINDOM, MINNESOTA

2017 WASTEWATER TREATMENT FACILITY IMPROVEMENTS

EXISTING FILTER BUILDING – PLUMBING & NEW PRE-TREATMENT BUILDING – PLUMBING RISERS

SHEET 6.04

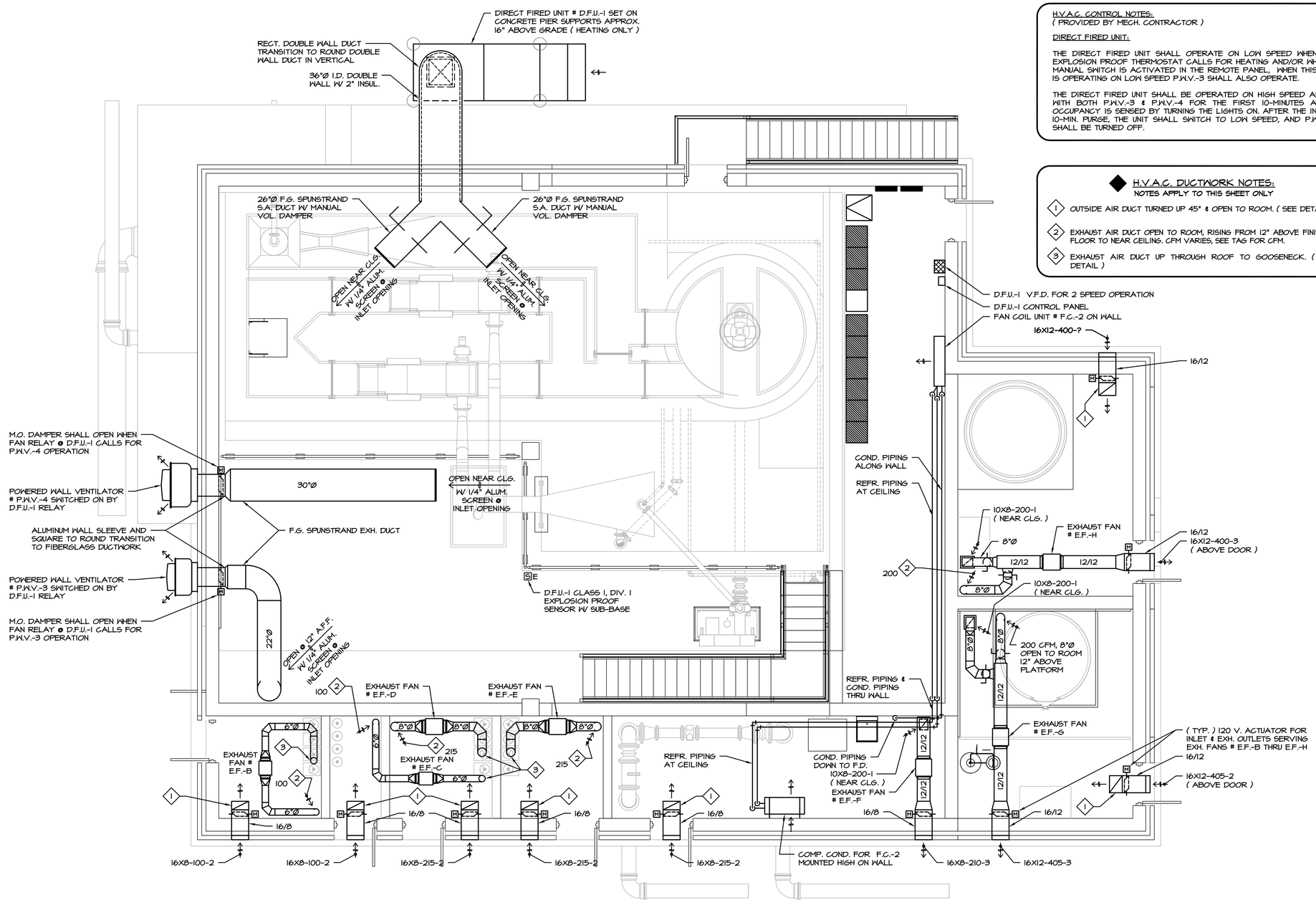

H.V.A.C. CONTROL NOTES:
(PROVIDED BY MECH. CONTRACTOR)

DIRECT FIRED UNIT:

THE DIRECT FIRED UNIT SHALL OPERATE ON LOW SPEED WHEN THE EXPLOSION PROOF THERMOSTAT CALLS FOR HEATING AND/OR WHEN A MANUAL SWITCH IS ACTIVATED IN THE REMOTE PANEL. WHEN THIS UNIT IS OPERATING ON LOW SPEED P.W.V.-3 SHALL ALSO OPERATE.

THE DIRECT FIRED UNIT SHALL BE OPERATED ON HIGH SPEED ALONG WITH BOTH P.W.V.-3 & P.W.V.-4 FOR THE FIRST 10-MINUTES AFTER OCCUPANCY IS SENSED BY TURNING THE LIGHTS ON. AFTER THE INITIAL 10-MIN. PURGE, THE UNIT SHALL SWITCH TO LOW SPEED, AND P.W.V.-4 SHALL BE TURNED OFF.

H.V.A.C. DUCTWORK NOTES:

NOTES APPLY TO THIS SHEET ONLY

1. OUTSIDE AIR DUCT TURNED UP 45° & OPEN TO ROOM. (SEE DETAIL)
2. EXHAUST AIR DUCT OPEN TO ROOM, RISING FROM 12" ABOVE FINISHED FLOOR TO NEAR CEILING. CFM VARIES, SEE TAG FOR CFM.
3. EXHAUST AIR DUCT UP THROUGH ROOF TO GOOSENECK. (SEE DETAIL)

NEW PRE-TREATMENT BUILDING - H.V.A.C.

SCALE: 1/4" = 1'-0"

0' 2' 4' 8'
GRAPH SCALE

SCALES SHOWN ON DRAWINGS ARE FOR 24"x36" SIZE SHEETS ONLY. DRAWINGS PLOTTED ON ANY OTHER SIZE SHEETS NEED TO HAVE SCALES ADJUSTED ACCORDINGLY

© Bolton & Menk, Inc. 2017, All Rights Reserved

0 1 2 3 4 6 8 12
Graphic Scale for 1/4"=1'-0"

Dolejs Associates, Inc.
Consulting Engineers
1624 N. Riverfront Dr. Mankato, Minnesota 507-625-7869
17792 Idawood Path Lakeville, Minnesota 952-435-6790

I HEREBY CERTIFY THAT THIS PLAN, SPECIFICATION OR REPORT WAS PREPARED BY ME OR UNDER MY DIRECT SUPERVISION, AND THAT I AM A DULY LICENSED PROFESSIONAL ENGINEER UNDER THE LAWS OF THE STATE OF MINNESOTA

SIGNATURE: TYPED OR PRINTED NAME: Christopher J. Dolejs
DATE 12-04-2017 LIC. NO. 24771

BOLTON & MENK
www.bolton-menk.com

REV.	BY	DATE
A	CJD	12/04/2017

CITY OF WINDOM, MINNESOTA
2017 WASTEWATER TREATMENT FACILITY IMPROVEMENTS
NEW PRE-TREATMENT BUILDING - H.V.A.C.

SHEET 6.05

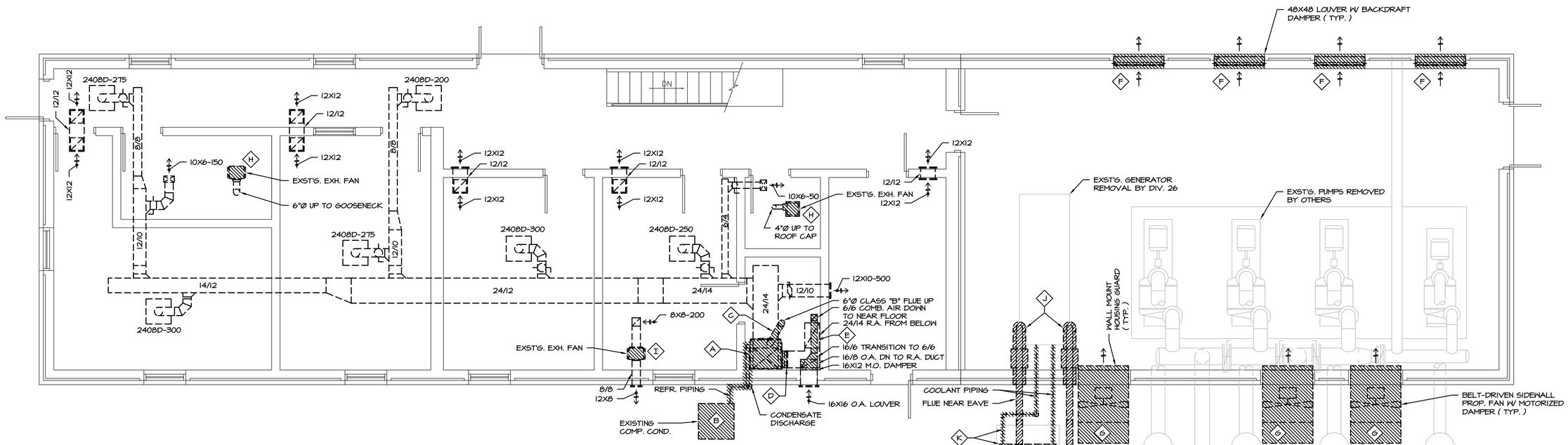

EXISTING CONTROL/BLOWER BUILDING - UPPER FLOOR PLAN - H.V.A.C. DEMOLITION

SCALE: 1/4" = 1'-0"

0' 2' 4' 8'
GRAPH SCALE

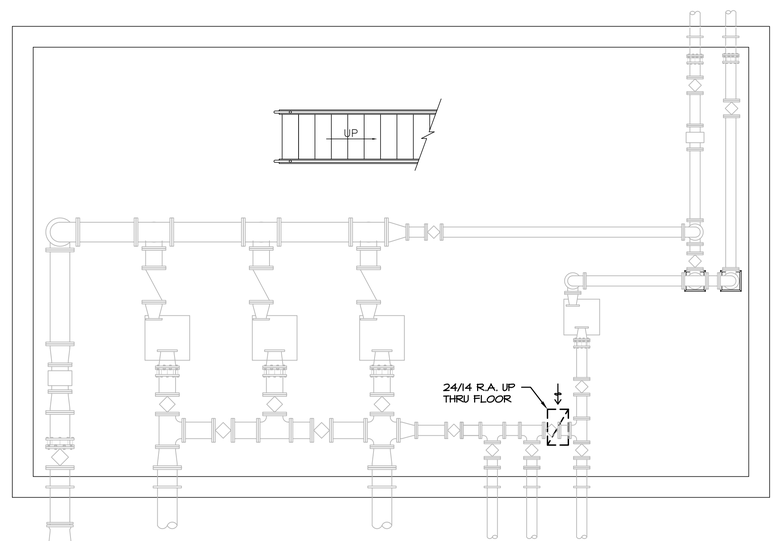

EXISTING CONTROL/BLOWER BUILDING - LOWER FLOOR PLAN - H.V.A.C. DEMOLITION

SCALE: 1/4" = 1'-0"

0' 2' 4' 8'
GRAPH SCALE

H.V.A.C. DEMOLITION NOTES:

NOTES APPLY TO THIS SHEET ONLY

- (A) DISCONNECT NAT. GAS SUPPLY, FLUE VENT, S.A. AND R.A. DUCTWORK FROM EXISTING GAS FURNACE. REMOVE FURNACE, THERMOSTAT, CONTROL WIRING AND ALL CONDENSATE PIPING. EXT. WALL PATCHING BY MECH. CONTRACTOR.
- (B) MECHANICAL CONTRACTOR SHALL EVACUATE & RECOVER ALL REFRIGERANT IN THE EXST'G. SYSTEM OF CONDENSING UNIT, EVAP. COIL, & ALL ASSOCIATED PIPING. THE MECHANICAL CONTRACTOR SHALL REMOVE THE AIR COOLED CONDENSING UNIT, EVAP. COIL & ALL CONNECTED REFRIGERATION PIPING.
- (C) REMOVE COMB. EXH. FLUE STACK FROM FURNACE UP THRU ROOF. REUSE EXISTING ROOF PENETRATION FOR NEW CONCENTRIC VENT.
- (D) REMOVE R.A. FILTER SLOT AND DUCTWORK AS REQUIRED TO INSTALL NEW FURNACE, FILTER SLOT AND FLEX. CONNECTION.
- (E) REMOVE 6/6 COMB. AIR DUCT BACK TO NEAR O.A. LOUVER AND 16/8 O.A. DUCTWORK FROM LOUVER TO R.A. DUCT CONNECTION, INCLUDING EXST'G. M.O. DAMPER.
- (F) REMOVE EXST'G. 48X48 LOUVER AND ATTATCHED BACKDRAFT DAMPER.
- (G) REMOVE EXST'G. SIDEWALL PROPELLER FAN, MOTORIZED DAMPER, WEATHER HOOD AND HOUSING GUARD AT INTERIOR WALL.
- (H) REMOVE EXISTING CEILING EXHAUST FAN. REMOVE EXHAUST DUCTWORK AS REQUIRED TO INSTALL NEW FAN.
- (I) REMOVE EXISTING INLINE EXHAUST FAN. REMOVE EXHAUST DUCTWORK AS REQUIRED TO INSTALL NEW FAN.
- (J) MECH. CONTRACTOR SHALL DISCONNECT FLUE STACKS FROM GENERATOR AND REMOVE TO EXTERIOR TERMINATION. EXTERIOR WALL PATCHING BY OTHERS.
- (K) MECH. CONTRACTOR SHALL DRAIN, DISCONNECT & REMOVE COOLANT SUPPLY & RETURN PIPING FROM GENERATOR TO RADIATOR. MECH. CONTRACTOR SHALL REMOVE THE RADIATOR AND TURN IT OVER TO OWNER. EXTERIOR WALL PATCHING BY OTHERS.

SCALES SHOWN ON DRAWINGS ARE FOR 24"x36" SIZE SHEETS ONLY. DRAWINGS PLOTTED ON ANY OTHER SIZE SHEETS NEED TO HAVE SCALES ADJUSTED ACCORDINGLY

© Bolton & Menk, Inc. 2017, All Rights Reserved

0 1 2 3 4 6 8 12
Graphic Scale for 1/4"=1'-0"

Dolejs Associates, Inc. Consulting Engineers
1624 N. Riverfront Dr. Mankato, Minnesota 507-625-7869
17792 Idawood Path Lakeville, Minnesota 952-435-6790

I HEREBY CERTIFY THAT THIS PLAN, SPECIFICATION OR REPORT WAS PREPARED BY ME OR UNDER MY DIRECT SUPERVISION, AND THAT I AM A DULY LICENSED PROFESSIONAL ENGINEER UNDER THE LAWS OF THE STATE OF MINNESOTA

SIGNATURE: TYPED OR PRINTED NAME: Christopher J. Dolejs
DATE 12-04-2017 LIC. NO. 24771

BOLTON & MENK
www.bolton-menk.com

REV.	BY	DATE
A	CJD	12/04/2017

CITY OF WINDOM, MINNESOTA
2017 WASTEWATER TREATMENT FACILITY IMPROVEMENTS
EXISTING CONTROL/BLOWER BUILDING – H.V.A.C. DEMOLITION

SHEET 6.06

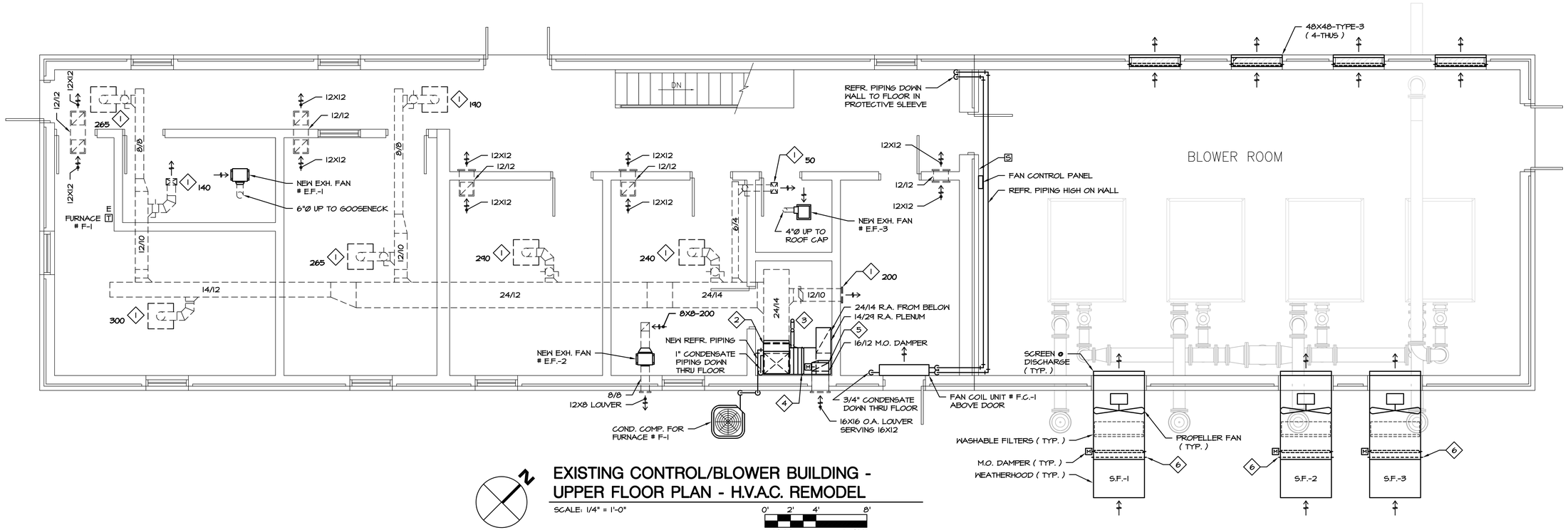

EXISTING CONTROL/BLOWER BUILDING - UPPER FLOOR PLAN - H.V.A.C. REMODEL

SCALE: 1/4" = 1'-0"

0' 2' 4' 8'
GRAPH SCALE

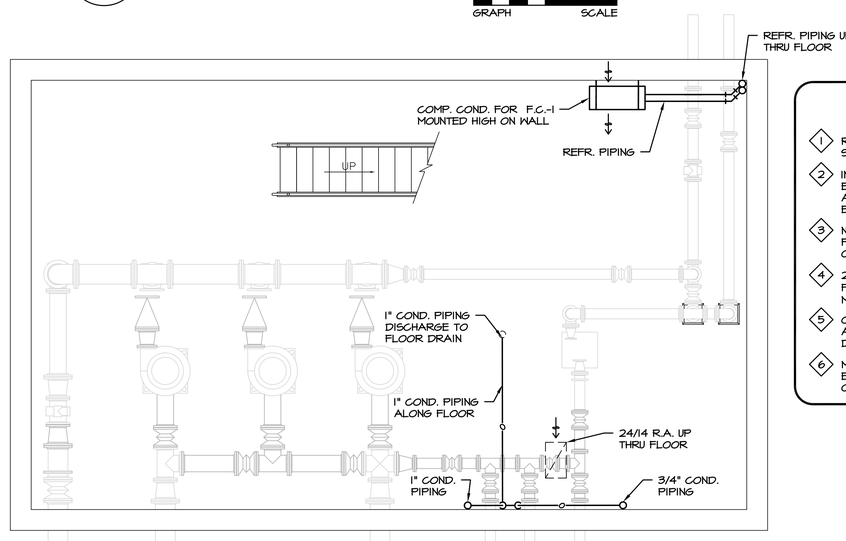

EXISTING CONTROL/BLOWER BUILDING LOWER FLOOR PLAN - H.V.A.C. REMODEL

SCALE: 1/4" = 1'-0"

0' 2' 4' 8'
GRAPH SCALE

H.V.A.C. REMODEL NOTES:

NOTES APPLY TO THIS SHEET ONLY

1. REBALANCE EXISTING SUPPLY DIFFUSER OR GRILLE TO CFM SHOWN ON PLAN.
2. INSTALL NEW FURNACE # F-1 IN UPFLOW CONFIGURATION WITH EVAP. COIL INSTALLED ABOVE. PROVIDE NEW LINED S.A. PLENUM AND CONNECTION TO EXISTING 24/14 L. S.A. DUCT. RECONNECT TO EXISTING NATURAL GAS SHUT-OFF.
3. NEW COMBUSTION AIR INTAKE AND VENT FROM SIDE CONNECTIONS TO FURNACE # F-1. THRU EXISTING CEILING CONNECTING TO NEW CONCENTRIC VENT THRU ROOF. INSTALL PER MFR. RECOMMENDATIONS.
4. 25/29 R.A. DUCTWORK TO FLEX CONNECTOR AND SIDE & BOTTOM FILTER RETURN AT FURNACE # F-1. (SEE DETAIL OR PROVIDE MANUFACTURER'S RECOMMENDED RETURN AIR BASE)
5. O.A. DUCT CONNECTED TO EXST'G. LOUVER W/ NEW M.O. DAMPER AND MANUAL VOL. DAMPER IN VERTICAL. TRANSITION FROM 16/12 DUCT TO 10/10. CONNECT 10/10 DUCT INTO TOP OF R.A. PLENUM.
6. MECH. CONTRACTOR TO INSTALL RIGID SUSPENSION BRACE FROM EXTERIOR WALL ABOVE FAN TO END OF FAN HOUSING AT CONNECTION TO WEATHERHOOD.

H.V.A.C. CONTROL NOTES:

(PROVIDED BY MECH. CONTRACTOR)

BLOWER ROOM:

1. A REMOTE WALL MOUNT SENSOR FOR COOLING SHALL SIGNAL A TEMP. INCREASE BEYOND ROOM SET-POINT TO A FAN CONTROL PANEL.
2. FAN CONTROL PANEL SHALL PROVIDE FOR OPERATION OF 1, 2 OR 3 STAGES OF FAN OPERATION AS REQUIRED TO COOL THE ROOM TO SET-POINT.
3. WHEN A SUPPLY FAN IS SWITCHED "ON" IT'S CORRELATING M.O. DAMPER SHALL OPEN. WHEN THE FAN IS "OFF" THE DAMPER SHALL BE CLOSED.

FURNACE # F-1:

1. PROVIDE AN ELECTRONIC TIME-CLOCK THERMOSTAT TO CONTROL FAN OPERATION, HEATING OPERATION, COOLING OPERATION AND OCCUPIED/UNOCCUPIED TIME SCHEDULE.
2. IN THE OCCUPIED MODE THE FURNACE FAN SHALL RUN CONTINUOUSLY AND THE OUTSIDE AIR M.O. DAMPER SHALL BE OPEN. HEATING AND COOLING SHALL OPERATE AS REQUIRED TO MAINTAIN TEMPERATURE SET-POINT.
3. IN THE UNOCCUPIED MODE THE FAN SHALL RUN INTERMITTENTLY, OUTSIDE AIR DAMPER SHALL BE CLOSED AND HEATING AND COOLING SHALL OPERATE AS REQUIRED TO MAINTAIN UNOCCUPIED SET-POINT TEMPERATURE.

SCALES SHOWN ON DRAWINGS ARE FOR 24"x36" SIZE SHEETS ONLY. DRAWINGS PLOTTED ON ANY OTHER SIZE SHEETS NEED TO HAVE SCALES ADJUSTED ACCORDINGLY

© Bolton & Menk, Inc. 2017, All Rights Reserved

0 1 2 3 4 6 8 12
Graphic Scale for 1/4"=1'-0"

Dolejs Associates, Inc.
Consulting Engineers
1624 N. Riverfront Dr. Mankato, Minnesota 507-625-7869
17792 Idawood Path Lakeville, Minnesota 952-435-6790

I HEREBY CERTIFY THAT THIS PLAN, SPECIFICATION OR REPORT WAS PREPARED BY ME OR UNDER MY DIRECT SUPERVISION, AND THAT I AM A DULY LICENSED PROFESSIONAL ENGINEER UNDER THE LAWS OF THE STATE OF MINNESOTA

SIGNATURE: TYPED OR PRINTED NAME: Christopher J. Dolejs
DATE 12-04-2017 LIC. NO. 24771

BOLTON & MENK
www.bolton-menk.com

REV.	BY	DATE
A	CJD	12/04/2017

CITY OF WINDOM, MINNESOTA
2017 WASTEWATER TREATMENT FACILITY IMPROVEMENTS
EXISTING CONTROL/BLOWER BUILDING – H.V.A.C. REMODEL

SHEET 6.07

H.V.A.C. DEMOLITION NOTES:

NOTES APPLY TO THIS SHEET ONLY

- A — REMOVE EXISTING LOUVER, WALL SLEEVE AND MOTOR-OPERATED DAMPER. SEE REMODEL PLAN FOR REUSE OF WALL OPENING.
- B — REMOVE EXISTING POWERED-WALL VENTILATOR, WALL SLEEVE AND ANY DUCT MOUNTED DAMPERS OR ACCESSORIES. SEE REMODEL PLAN FOR REUSE OF WALL OPENING.
- C — REMOVE EXISTING SENSOR AND THERMOSTAT.

H.V.A.C. CONTROL NOTES:

(PROVIDED BY MECH. CONTRACTOR)

1. PROVIDE A COOLING ONLY THERMOSTAT TO CONTROL P.W.V.-1 AND RELATED OUTSIDE AIR AND EXHAUST AIR M.O. DAMPERS. WHEN SPACE SET-POINT OF 70° (ADJUSTABLE) IS EXCEEDED P.W.V.-1 FAN SHALL RUN AND BOTH DAMPERS SHALL OPEN. WHEN THE FAN IS OFF THE N.C. DAMPER SHALL REMAIN CLOSED.
2. PROVIDE A COOLING ONLY THERMOSTAT TO CONTROL P.W.V.-2 AND RELATED OUTSIDE AIR AND EXHAUST AIR M.O. DAMPERS. WHEN SPACE SET-POINT OF 75° (ADJUSTABLE) IS EXCEEDED P.W.V.-2 FAN SHALL RUN AND BOTH DAMPERS SHALL OPEN. WHEN THE FAN IS OFF THE N.C. DAMPER SHALL REMAIN CLOSED.

H.V.A.C. REMODEL NOTES:

NOTES APPLY TO THIS SHEET ONLY

- 1 — INSTALL NEW LOUVER, WALL SLEEVE AND MOTOR OPERATED DAMPER THROUGH EXISTING OPENING. (VERIFY SIZE)
- 2 — INSTALL NEW POWERED WALL VENTILATOR, WALL SLEEVE AND BACKDRAFT DAMPER THROUGH EXISTING OPENING. (VERIFY SIZE)
- 3 — THERMOSTAT TO CONTROL P.W.V.-1 AND CORRESPONDING M.O. DAMPER AT OPPOSITE WALL.
- 4 — SENSOR TO CONTROL P.W.V.-2 AND CORRESPONDING M.O. DAMPER AT OPPOSITE WALL.

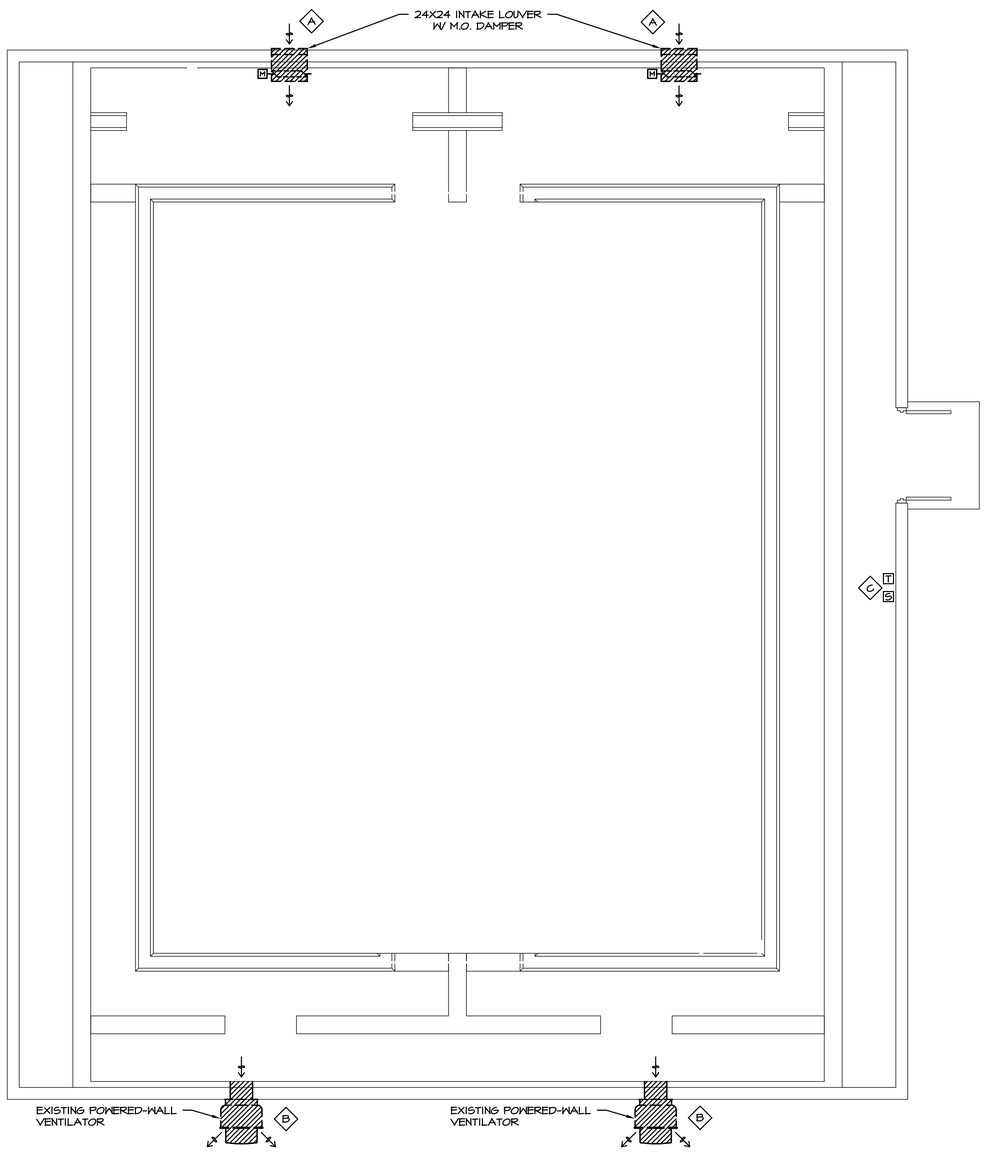

EXISTING FILTER BUILDING - H.V.A.C. DEMOLITION

SCALE: 1/4" = 1'-0"

0' 2' 4' 8'
GRAPH SCALE

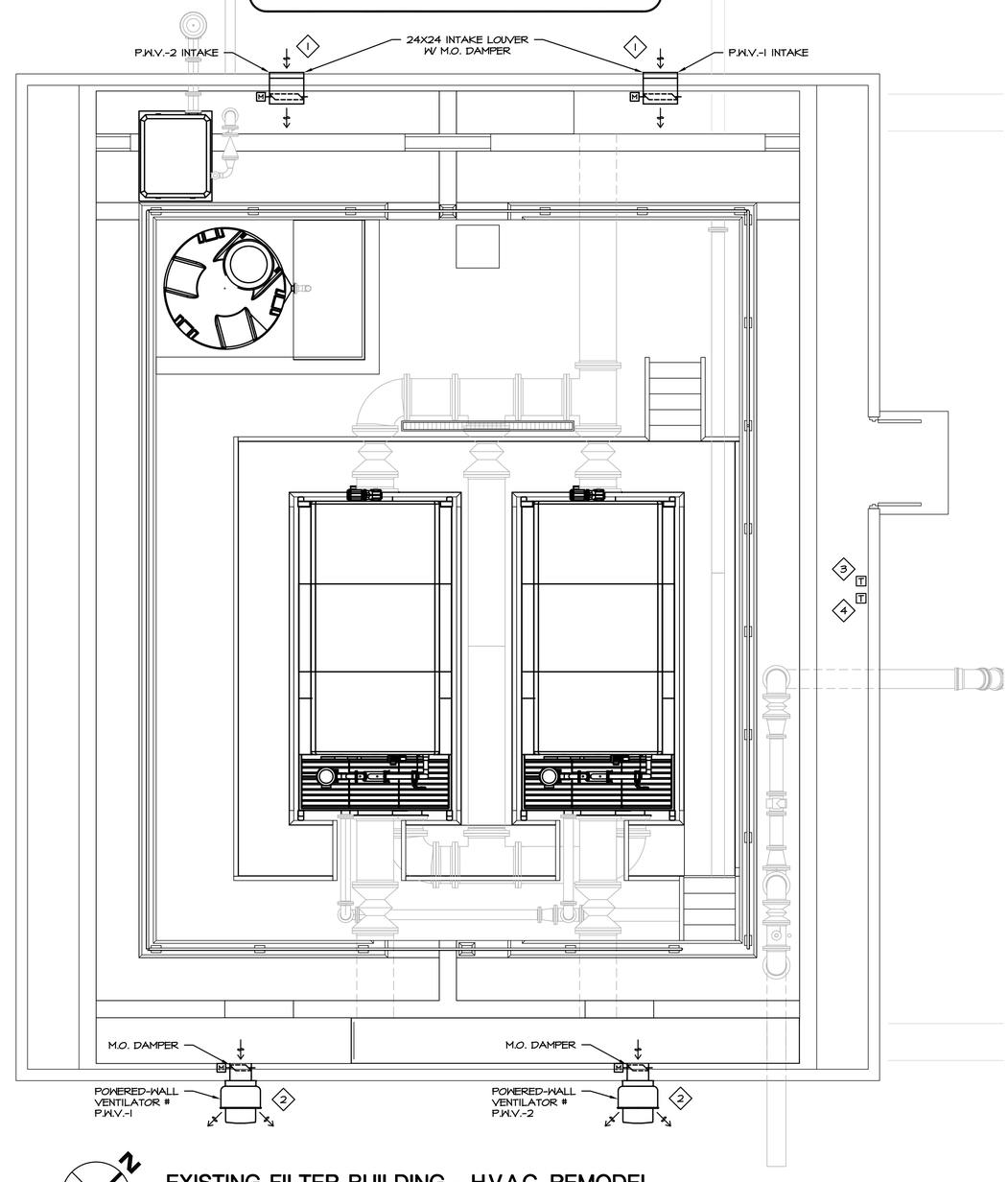

EXISTING FILTER BUILDING - H.V.A.C. REMODEL

SCALE: 1/4" = 1'-0"

0' 2' 4' 8'
GRAPH SCALE

SCALES SHOWN ON DRAWINGS ARE FOR 24"x36" SIZE SHEETS ONLY. DRAWINGS PLOTTED ON ANY OTHER SIZE SHEETS NEED TO HAVE SCALES ADJUSTED ACCORDINGLY

© Bolton & Menk, Inc. 2017, All Rights Reserved

0 1 2 3 4 6 8 12
Graphic Scale for 1/4"=1'-0"

Dolejs Associates, Inc.
Consulting Engineers
1624 N. Riverfront Dr.
Mankato, Minnesota
507-625-7869
17792 Idawood Path
Lakeville, Minnesota
952-435-6790

I HEREBY CERTIFY THAT THIS PLAN, SPECIFICATION OR REPORT WAS PREPARED BY ME OR UNDER MY DIRECT SUPERVISION, AND THAT I AM A DULY LICENSED PROFESSIONAL ENGINEER UNDER THE LAWS OF THE STATE OF MINNESOTA

SIGNATURE: TYPED OR PRINTED NAME: Christopher J. Dolejs
DATE 12-04-2017 LIC. NO. 24771

BOLTON & MENK
www.bolton-menk.com

REV.	BY	DATE
A	CJD	12/04/2017

CITY OF WINDOM, MINNESOTA
2017 WASTEWATER TREATMENT FACILITY IMPROVEMENTS
EXISTING FILTER BUILDING –
H.V.A.C. DEMOLITION & REMODEL

SHEET 6.08

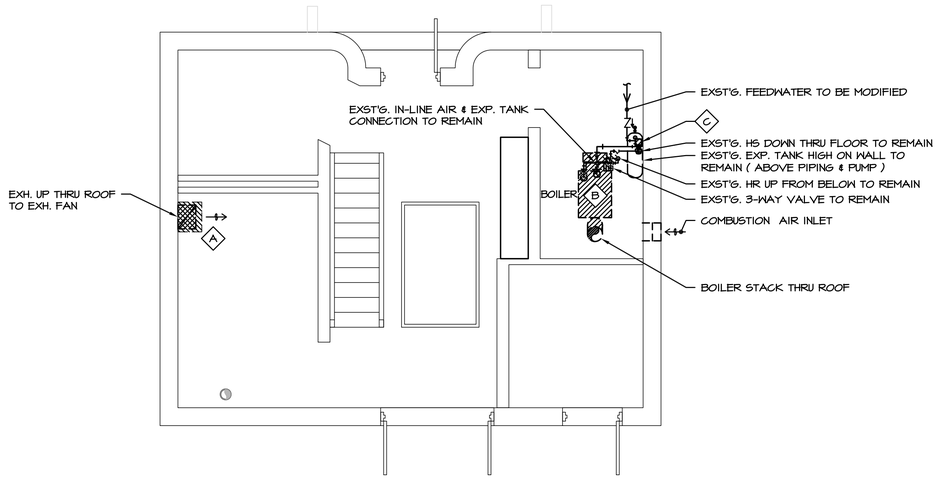

N

SLUDGE CONTROL BUILDING
MAIN FLOOR PLAN - H.V.A.C. DEMOLITION

SCALE: 1/4" = 1'-0"

0' 2' 4' 8'
GRAPH SCALE

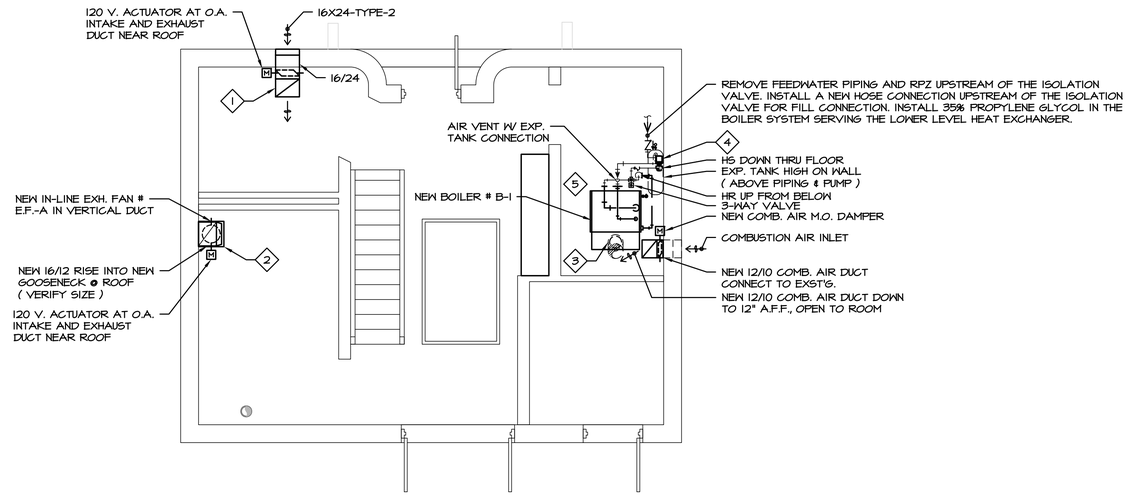

N

SLUDGE CONTROL BUILDING
MAIN FLOOR PLAN - H.V.A.C. REMODEL

SCALE: 1/4" = 1'-0"

0' 2' 4' 8'
GRAPH SCALE

H.V.A.C. DEMOLITION NOTES:
NOTES APPLY TO THIS SHEET ONLY

A. REMOVE EXST'G. EXHAUST FAN AND BACKDRAFT DAMPER FROM ROOF. REMOVE EXH. DUCTWORK FROM ROOF DOWN AS REQUIRED TO INSTALL NEW IN-LINE FAN. SEE REMODEL PLAN ON THIS SHEET FOR REGONNECTION AND REUSE OF ROOF OPENING.

B. DRAIN BOILER AND HS & HR PIPING TO HEAT EXCHANGER ON LOWER LEVEL. DISCONNECT FLUE STACK, FEEDWATER PIPE, HS & HR PIPES FROM BOILER. REMOVE EXISTING EXST'G. BOILER. REMOVE FEEDWATER, HS & HR PIPING AS REQUIRED TO INSTALL NEW PIPING.

C. REMOVE EXISTING CIRCULATING PUMP AND HS PIPING AS REQUIRED TO INSTALL NEW PUMP. SEE SCHEDULE FOR NEW EQUIPMENT.

H.V.A.C. CONTROL NOTES:
(PROVIDED BY MECH. CONTRACTOR)

BOILER, PUMPS & 3-WAY VALVE CONTROL:

1. CURRENT RELAY FOR HEATING PUMP IN HEATING PUMP DISCHARGE PROVIDES ON/OFF INDICATION.
2. CONTROL BOILER HEATING WATER SUPPLY TEMPERATURE, SET AT 170°F BY FIRING THE BOILER.
3. CONTROL HEATING WATER AT 165°F FOR THE LOWER LEVEL HEAT EXCHANGER BY MODULATING THE EXISTING 3-WAY VALVE.
4. PUMP # P-1 SHALL OPERATE CONTINUOUSLY.
5. WHEN CURRENT RELAY SWITCH IN THE HEATING SUPPLY CIRCUIT SHOWS "NO FLOW CONDITION" INDICATE ALARM.
6. COMBUSTION AIR DAMPER SHALL OPEN WHENEVER THE BOILER FIRES AND CLOSE WHEN THE BURNER IS "OFF".

H.V.A.C. DUCTWORK NOTES:
NOTES APPLY TO THIS SHEET ONLY

1. OUTSIDE AIR DUCT TURNED UP 45° & OPEN TO ROOM FOR EXHAUST FAN MAKE UP AIR. (SEE DETAIL)
2. TRANSITION FROM EXISTING EXH. DUCTWORK, RISING UP FROM BELOW, TO NEW EXHAUST FAN # E.F.-A. PROVIDE NEW EXHAUST DUCTWORK THRU EXISTING ROOF PENETRATION TO GOOSENECK ABOVE ROOF. (SEE DETAIL) (VERIFY SIZE)
3. CONNECT NEW BOILER STACK TO EXISTING BOILER STACK.
4. NEW CIRCULATION PUMP # P-1 W/ NEW ISOLATION VALVES.
5. AFTER CIRCULATION OF WATER TREATMENT AND FLUSHING OF NEW AND EXISTING PIPE CONNECTED TO THIS BOILER SYSTEM ADD A PRE-MIXED 35% PROPYLENE GLYCOL SOLUTION TO THE BOILER SYSTEM.

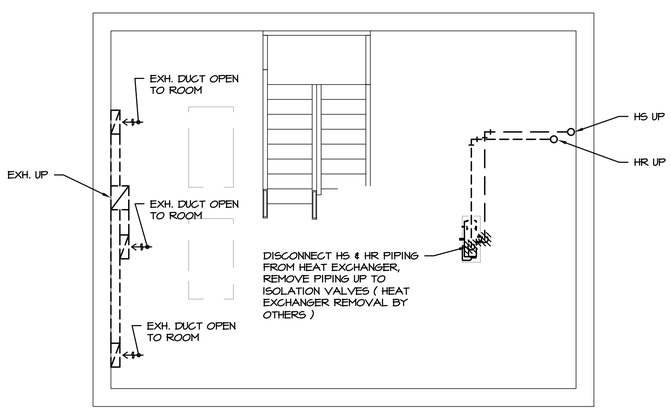

N

SLUDGE CONTROL BUILDING
LOWER FLOOR PLAN - H.V.A.C. DEMOLITION

SCALE: 1/4" = 1'-0"

0' 2' 4' 8'
GRAPH SCALE

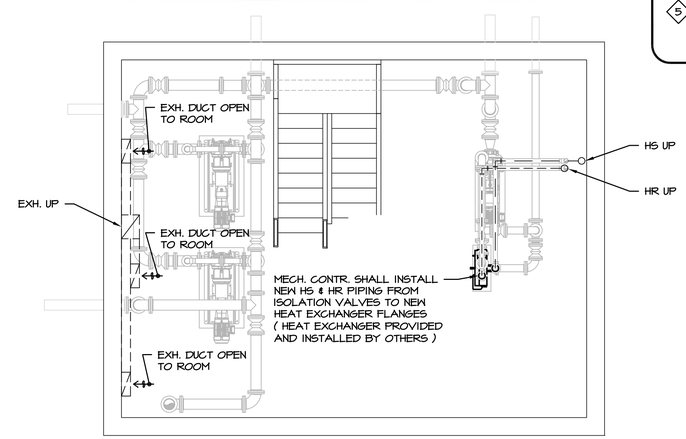

N

SLUDGE CONTROL BUILDING
LOWER FLOOR PLAN - H.V.A.C. REMODEL

SCALE: 1/4" = 1'-0"

0' 2' 4' 8'
GRAPH SCALE

SCALES SHOWN ON DRAWINGS ARE FOR 24"x36" SIZE SHEETS ONLY. DRAWINGS PLOTTED ON ANY OTHER SIZE SHEETS NEED TO HAVE SCALES ADJUSTED ACCORDINGLY

© Bolton & Menk, Inc. 2017, All Rights Reserved

0 1 2 3 4 6 8 12
Graphic Scale for 1/4"=1'-0"

Dolejs Associates, Inc.
Consulting Engineers
1624 N. Riverfront Dr. Mankato, Minnesota 507-625-7869
17792 Idawood Path Lakeville, Minnesota 952-435-6790

I HEREBY CERTIFY THAT THIS PLAN, SPECIFICATION OR REPORT WAS PREPARED BY ME OR UNDER MY DIRECT SUPERVISION, AND THAT I AM A DULY LICENSED PROFESSIONAL ENGINEER UNDER THE LAWS OF THE STATE OF MINNESOTA

SIGNATURE: TYPED OR PRINTED NAME: Christopher J. Dolejs
DATE 12-04-2017 LIC. NO. 24771

BOLTON & MENK
www.bolton-menk.com

REV.	BY	DATE
A	CJD	12/04/2017

CITY OF WINDOM, MINNESOTA
2017 WASTEWATER TREATMENT FACILITY IMPROVEMENTS
SLUDGE CONTROL BUILDING – H.V.A.C. DEMOLITION & REMODEL

SHEET 6.09

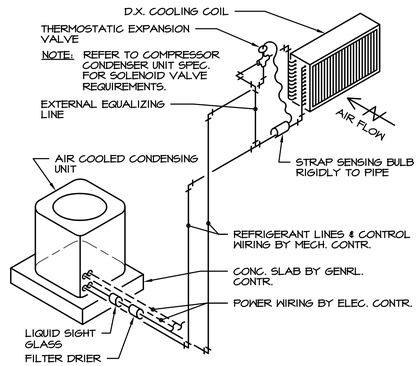

1 / 6.10 REFRIGERANT COIL PIPING
NO SCALE : DIAGRAMMATIC ONLY

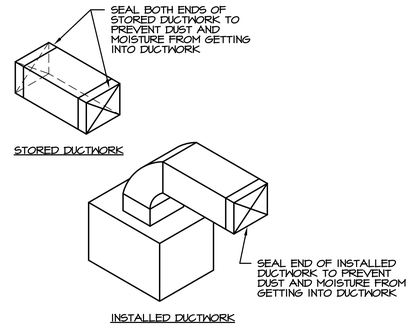

2 / 6.10 DUCTWORK PROTECTION DURING CONSTRUCTION DETAIL

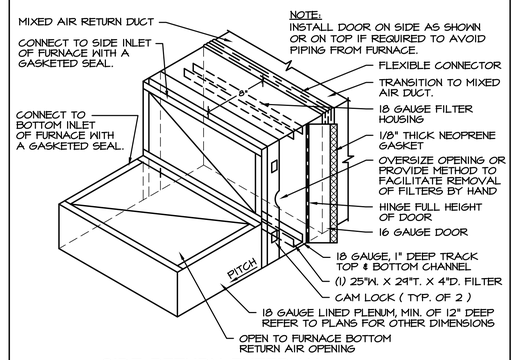

3 / 6.10 SIDE RETURN EXTERNAL FILTER SECTION DETAIL
NO SCALE

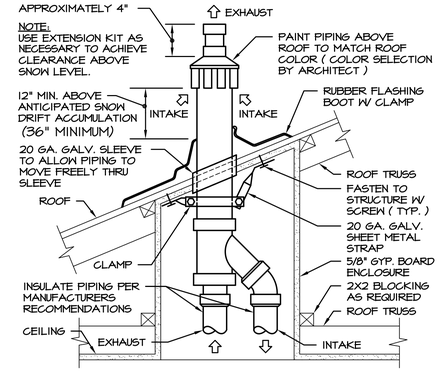

4 / 6.10 FURNACE VENT AND INTAKE DETAIL
NO SCALE

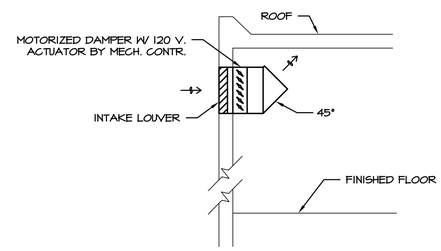

5 / 6.10 AIR INTAKE DETAIL
NO SCALE

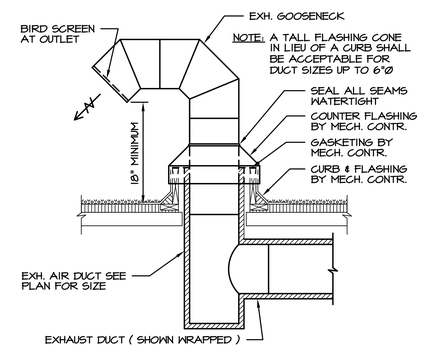

6 / 6.10 EXHAUST GOOSENECK
NO SCALE

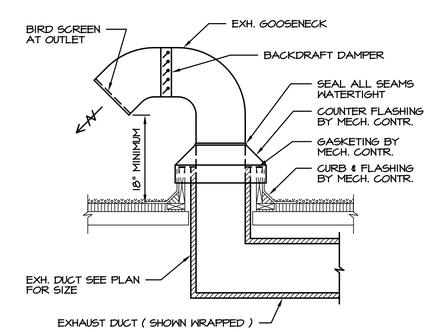

7 / 6.10 EXHAUST GOOSENECK
NO SCALE

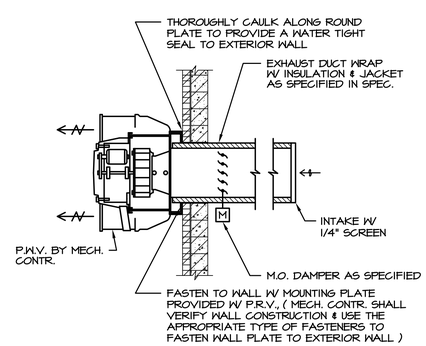

8 / 6.10 POWERED WALL VENTILATOR DETAIL
NO SCALE

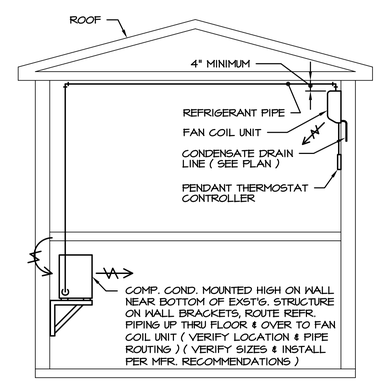

9 / 6.10 DUCTLESS A.C. UNIT PIPING
NO SCALE : DIAGRAMMATIC ONLY
F.C.-1

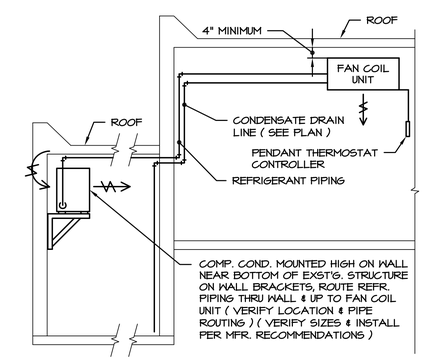

10 / 6.10 DUCTLESS A.C. UNIT PIPING
NO SCALE : DIAGRAMMATIC ONLY
F.C.-2

SCALES SHOWN ON DRAWINGS ARE FOR 24"x36" SIZE SHEETS ONLY. DRAWINGS PLOTTED ON ANY OTHER SIZE SHEETS NEED TO HAVE SCALES ADJUSTED ACCORDINGLY

© Bolton & Menk, Inc. 2017, All Rights Reserved

Dolejs Associates, Inc. Consulting Engineers
1624 N. Riverfront Dr. Mankato, Minnesota 507-625-7869
17792 Idawood Path Lakeville, Minnesota 952-435-6790

I HEREBY CERTIFY THAT THIS PLAN, SPECIFICATION OR REPORT WAS PREPARED BY ME OR UNDER MY DIRECT SUPERVISION, AND THAT I AM A DULY LICENSED PROFESSIONAL ENGINEER UNDER THE LAWS OF THE STATE OF MINNESOTA

SIGNATURE: TYPED OR PRINTED NAME: Christopher J. Dolejs
DATE 12-04-2017 LIC. NO. 24771

BOLTON & MENK
www.bolton-menk.com

REV.	BY	DATE
A	CJD	12/04/2017

CITY OF WINDOM, MINNESOTA
2017 WASTEWATER TREATMENT FACILITY IMPROVEMENTS
H.V.A.C. DETAILS

SHEET 6.10

FURNACE UNIT SCHEDULE

UNIT #	CARRIER MODEL #	UNIT TYPE	FUEL	HEATING BTU INPUT	HEATING BTU OUTPUT	BLOWER	CFM	ESP	HP	VOLT & PHASE	FILTERS	OUTSIDE AIR %	OUTSIDE AIR CFM	EVAP. COIL MODEL #	DX TONS	CFM	SP DROP	COMP. COND. MODEL #	BTUH	EER	AMB. TEMP.	VOLT & PHASE	M.C.A.	M.O.C.P.	REMARKS
F-1	59SP2A120E24	HIGH EFFICIENCY CONDENSING, VERTICAL DISCHARGE W/ COMB. BOTTOME AND SIDE RA INLET	N. GAS	120,000	112,000	11.5 X 10	1940	0.70"	1	120 V. 1 Ø	4" FILTER IN PRE-FABRI-CATED RACK W/ PIANO HINGE DOOR, BUILT FOR COMB. SIDE & BOTTOM RA	20	380	CNPV-61	5	1900	0.20"	24ACC-60	57,500	14.00	95°	208 V. 1 Ø	27.5	40	SINGLE SPD. SCROLL COMP. R-410A

FAN COIL UNIT SCHEDULE / HTG. COIL / COMP. COND. UNIT

UNIT #	CARRIER MODEL #	ARRANGEMENT	CFM	FAN SPEEDS	MBH	MOISTURE REMOVAL	VOLT & PHASE	SEER	FILTERS	OUTSIDE AIR %	OUTSIDE AIR CFM	HTG. COIL KW	HTG. COIL BTUH	HTG. COIL VOLT & PHASE	COMP. COND. CARRIER MODEL #	COMP. COND. BTUH	COMP. COND. TONS	COMP. COND. VOLT & PHASE	COMP. COND. MCA	COMP. COND. M.O.C.P	REMARKS
FC-1	40MAQB24B	WALL MOUNTED HORIZ. THROW	530/620/780	3	24,000	---	208 V. 1 Ø	20.5	PERMANENT WASHABLE	---	---	---	---	---	38MAQB24R	24,000	2	208 V. 1 Ø	20	30	R-410A UNIT MOUNTED ON BRACKET SUPPORT.
FC-2	40MAQB24B	WALL MOUNTED HORIZ. THROW	530/620/780	3	24,000	---	208 V. 1 Ø	20.5	PERMANENT WASHABLE	---	---	---	---	---	38MAQB24R	24,000	2	208 V. 1 Ø	20	30	R-410A UNIT MOUNTED ON BRACKET SUPPORT.

GRILLE, REGISTER & DIFFUSER SCHEDULE

UNIT #	E.H. PRICE MODEL #	DUTY	VOLUME CONTROL	MATERIAL	FINISH	REMARKS
1	80D-F	CEILING EXHAUST GRILLE	NONE	ALUMINUM	WHITE	1/2" X 1/2" EGG CRATE, SURFACE MOUNTED
	ARROW					
2	EA-415-D	WALL INTAKE LOUVER	NONE	ALUMINUM	CLEAR ANODIZED	37" DRAINABLE BLADES @ 3.5" O.C., W/ SILL EXTENSION, 57% FREE AREA @ 48X48 LOUVER
3	EA-415-D	WALL EXHAUST LOUVER	NONE	ALUMINUM	CLEAR ANODIZED	37" DRAINABLE BLADES @ 3.5" O.C., W/ SILL EXTENSION, 57% FREE AREA @ 48X48 LOUVER

DIRECT FIRED UNIT SCHEDULE

UNIT #	GREENHECK MODEL #	TYPE UNIT	HIGH SPD. CFM	HIGH SPD. FPM	LOW SPD. CFM	LOW SPD. FPM	ESP	TSP	BLOWER	HP	FUEL	HTG. BTUH INPUT	HTG. BTUH ΔT	DAMPER	FILTER	VOLT & PHASE	REMARKS
DFU-1	DGX-118-H32 W/ V.F.D.	EXTERIOR UNIT MOUNTED ON ON CONCRETE PIER STAND W/ TOP VERTICAL DISCHARGE	10,050	2741	3610	985	1"	2.39"	(1) 18" FC	10	N.GAS	1,066,500	90°	DISCHARGE	34.7 SF, 2" 30% EFF., MERV-8 IN V-BANK 290 FPM	460 V. 3 Ø	EXTENDED HOOD W/ INLET LOUVERS

POWERED WALL VENTILATOR SCHEDULE

UNIT #	AREA SERVED	GREENHECK MODEL #	CFM	ESP	T.S.	HP	VOLT & PHASE	DAMPER M.O.	DAMPER B.D.	DRIVE	WHEEL SIZE	COLLAR SIZE	RPM	MAX. RPM	MAX. CFM	SONES	REMARKS
PWV-1	FILTER BLDG.	CW-141-V6-1/4	1000	1/4"	2908	1/4-HP ECM	120 V. 1 Ø	W/ UNIT	NONE	DIRECT	14" Ø	22" SQ.	760	1105	1793	5.2	HORIZ. DISCHARGE FAN ON WALL COLLAR (1)
PWV-2	FILTER BLDG.	CW-141-V6-1/4	1000	1/4"	2908	1/4-HP ECM	120 V. 1 Ø	W/ UNIT	NONE	DIRECT	14" Ø	22" SQ.	760	1105	1793	5.2	HORIZ. DISCHARGE FAN ON WALL COLLAR (1)
PWV-3	GRIT ROOM IN PRE-TREATMENT BLDG.	CWB-180-10	3610	3/8"	5182	1	460 V. 3 Ø	W/ UNIT	NONE	BELT	18" Ø	30" SQ.	1070	1185	4110	15.9	HORIZ. DISCHARGE FAN ON WALL COLLAR (2)
PWV-4	GRIT ROOM IN PRE-TREATMENT BLDG.	CWB-240-15	6700	3/8"	5259	1-1/2	460 V. 3 Ø	W/ UNIT	NONE	BELT	24" Ø	34" SQ.	820	845	6947	17.5	HORIZ. DISCHARGE FAN ON WALL COLLAR (2)

(1) SPEED CONTROL IN HOUSING (2) EXPLOSION-PROOF W/ NON-SPARKING WHEEL

EXHAUST FAN SCHEDULE

UNIT #	SERVES	GREENHECK MODEL #	CFM	S.P.	WATTS	O.V.	VOLT & PHASE	RPM	MAX. RPM	MAX. CFM	SONES	CONTROL	REMARKS
E.F.-1	CONTROL BUILDING RESTROOM	SP-A200	170	.375"	56	383	120 V. 1 Ø	870	900	199	2.9	SWITCH W/ LIGHTS BY DIV. 16	8/8 DISCH. INTO 8" DIA. DUCT
E.F.-2	CONTROL BUILDING KITCHEN / LAB	CSP-A200	200	.25"	58	450	120 V. 1 Ø	900	900	203	0.9	SEPARATE PILOT SW. BY DIV. 16	13/10 INLET DUCT & 8/8 DISCH.
E.F.-3	CONTROL BUILDING RESTROOM	SP-A110	70	.25"	19	357	120 V. 1 Ø	900	950	96	1.3	SWITCH W/ LIGHTS BY DIV. 16	6" DIA. EXH. DUCT

(1) SPEED CONTROL IN HOUSING (2) SPEED CONTROL REMOTE MOUNTED

SIDE-WALL SUPPLY FAN SCHEDULE

UNIT #	AREA SERVED	GREENHECK MODEL #	CFM	ESP	TSP	HP	VOLT & PHASE	DAMPER M.O.	DAMPER B.D.	DRIVE	PROP. SIZE	WALL SLEEVE SIZE	RPM	MAX. RPM	MAX. CFM	SONES	REMARKS
SF-1	BLOWER ROOM	SBH-3H42	16,500	0.25"	1.02"	5	460 V. 3 Ø	W/ UNIT	NONE	BELT	42"	50 X 50	918	952	19,600	41	REUSE EXST'G. 50 X 50 WALL OPN'G. FOR NEW WALL HOUSING W/ V-BANK PERMANENT WASHABLE FILTERS, 90° TURN-DOWN INLET HOOD & M.O. DAMPER. SCREEN AT HOUSING INLET SHALL BE FLUSH W/ INTERIOR WALL FACE. PROVIDE OSHA APPROVED SCREEN OVER FAN DISCHARGE AREA.
SF-2	BLOWER ROOM	SBH-3H42	16,500	0.25"	1.02"	5	460 V. 3 Ø	W/ UNIT	NONE	BELT	42"	50 X 50	918	952	19,600	41	
SF-3	BLOWER ROOM	SBH-3H42	16,500	0.25"	1.02"	5	460 V. 3 Ø	W/ UNIT	NONE	BELT	42"	50 X 50	918	952	19,600	41	PROVIDE (4) TOTAL SETS OF PERM-ANENT WASHABLE FILTERS TO BE USED WITHIN THESE (3) FANS.

IN-LINE UTILITY EXHAUST FAN SCHEDULE

UNIT #	SERVES	GREENHECK MODEL #	CFM	DAMPER	S.P.	HP	O.V.	VOLT & PHASE	ROTATION	RPM	LOCATION	CONTROLS	REMARKS
EF-A	LOWER LEVEL SLUDGE CONTROL BUILDING	SQ-100 V6-1/4	1040	LOW LEAK NEAR ROOF PENETRATION	1/2"	1/4 ECM	748	120 V. 1 Ø	IN-LINE CENTRIFUGAL	1370	MAIN LEVEL	M.O. DAMPERS BY MECH. CONTR. POWER TO FAN AND 120 V. 1 PH. DAMPERS BY DIV. 16.	13/13 DISCH. DUCT THRU EXST'G. ROOF OPN'G. TO NEW GOOSENECK.
EF-B	DECHLORINATION ROOM PRETREATMENT BUILDING	SQ-65-V6-1/6	100	LOW LEAK NEAR ROOF PENETRATION	3/8"	1/6 ECM	185	120 V. 1 Ø	IN-LINE CENTRIFUGAL	1700	IN DECHLORI-NATION ROOM		12/9 DISCH. DUCT INTO 6" Ø DUCT, RISE THRU ROOF TO GOOSENECK
EF-C	CHLORINE STORAGE ROOM	SQ-65-V6-1/6	100	LOW LEAK NEAR ROOF PENETRATION	3/8"	1/6 ECM	185	120 V. 1 Ø	IN-LINE CENTRIFUGAL	1700	IN CHLORINE ROOM		12/9 DISCH. DUCT INTO 6" Ø DUCT, RISE THRU ROOF TO GOOSENECK
EF-D	CHLORINE ROOM	SQ-80-V6-1/6	215	LOW LEAK NEAR ROOF PENETRATION	3/8"	1/6 ECM	219	120 V. 1 Ø	IN-LINE CENTRIFUGAL	1410	IN CHLORINE ROOM		12/12 DISCH. DUCT INTO 8" Ø DUCT, RISE THRU ROOF TO GOOSENECK
EF-E	CHLORINE ROOM	SQ-80-V6-1/6	215	LOW LEAK NEAR ROOF PENETRATION	3/8"	1/6 ECM	219	120 V. 1 Ø	IN-LINE CENTRIFUGAL	1410	IN CHLORINE ROOM		12/12 DISCH. DUCT INTO 8" Ø DUCT, RISE THRU ROOF TO GOOSENECK
EF-F	SAMPLER / MECHANICAL ROOM	SQ-80-V6-1/6	215	LOW LEAK NEAR WALL PENETRATION	3/8"	1/6 ECM	219	120 V. 1 Ø	IN-LINE CENTRIFUGAL	1410	IN CHLORINE ROOM		12/12 DISCH. DUCT INTO 8" Ø DUCT, RISE THRU ROOF TO GOOSENECK
EF-G	FERRIC STORAGE TANK ROOM	SQ-90-V6-1/6	400	LOW LEAK NEAR WALL PENETRATION	3/8"	1/6 ECM	408	120 V. 1 Ø	IN-LINE CENTRIFUGAL	1410	IN FERRIC STOR. ROOM		12/12 DISCH. DUCT INTO 8" Ø DUCT, RISE THRU ROOF TO GOOSENECK
EF-H	CARBON STORAGE TANK ROOM	SQ-90-V6-1/6	400	LOW LEAK NEAR WALL PENETRATION	3/8"	1/6 ECM	408	120 V. 1 Ø	IN-LINE CENTRIFUGAL	1410	IN FERRIC STOR. ROOM		12/12 DISCH. DUCT INTO 8" Ø DUCT, RISE THRU ROOF TO GOOSENECK

BOILER SCHEDULE

UNIT #	WEIL-MCLAIN MODEL #	TYPE	FUEL	BTUH INPUT	E.W.T.	L.W.T.	BTUH OUTPUT	EFFICINECY	VENT SIZE	FLOW TAPPINGS	VOLT & PHASE	FLA	NET WT.	REMARKS
B-1	EG-75	CAST IRON BOILER	N. GAS	299,000	160°	145°	247,000	82.6%	8" Ø	3" HS 2-1/2" HR	120 V. 1 Ø	5	735	PROVIDE W/ AUTOMATIC VENT DAMPER. STAINLESS STEEL BURNER, INTEGRATED CONTROL MODULE W/ INTERMITTENT ELECTRONIC IGNITION, 30 PSI RELIEF,& HIGH LIMIT CONTROL

PUMP SCHEDULE

UNIT #	LOCATION	SERVES	USE	B. & G. MODEL #	GPM	HEAD	RPM	HP	VOLT & PHASE	CONTROL	REMARKS
P-1	BOILER ROOM IN SLUDGE CONTROL BLDG.	BOILER CONNECTED TO LOWER LEVEL HEAT EXCHANGER	HEATING 120 GPM SLUDGE	60-2AA	30	25'	1750	3/4	230 V. 3 Ø	CONSTANT OPERATION	NEW HORIZ. SHAFT IN-LINE CIRCULATOR

SCALES SHOWN ON DRAWINGS ARE FOR 24"x36" SIZE SHEETS ONLY. DRAWINGS PLOTTED ON ANY OTHER SIZE SHEETS NEED TO HAVE SCALES ADJUSTED ACCORDINGLY

© Bolton & Menk, Inc. 2017, All Rights Reserved

Dolejs Associates, Inc. Consulting Engineers
1624 N. Riverfront Dr. Mankato, Minnesota 507-625-7869
17792 Idawood Path Lakeville, Minnesota 952-435-6790

I HEREBY CERTIFY THAT THIS PLAN, SPECIFICATION OR REPORT WAS PREPARED BY ME OR UNDER MY DIRECT SUPERVISION, AND THAT I AM A DULY LICENSED PROFESSIONAL ENGINEER UNDER THE LAWS OF THE STATE OF MINNESOTA

SIGNATURE: DATE 12-04-2017 TYPED OR PRINTED NAME: Christopher J. Dolejs LIC. NO. 24771

BOLTON & MENK
www.bolton-menk.com

REV.	BY	DATE
A	CJD	12/04/2017

CITY OF WINDOM, MINNESOTA
2017 WASTEWATER TREATMENT FACILITY IMPROVEMENTS
H.V.A.C. SCHEDULES

SHEET 6.11

N

WASTEWATER TREATMENT PLANT - DEMOLITION SITE PLAN - ELECTRICAL

SCALE: 1"= 30'-0"

30 0 30
SCALE FEET

GENERAL NOTES

A. FOR BID PREPARATION, ELECTRICAL CONTRACTOR SHALL LOOK AT ALL DRAWINGS, AS PERTINENT INFORMATION IS NOT CONFINED TO THE 7.00 DRAWING SERIES.

B. ELECTRICAL CONTRACTOR SHALL COORDINATE WITH INSTRUMENTATION AND MECHANICAL CONTRACTORS AND SHALL BE RESPONSIBLE FOR ALL CONTROL WIRING. SEE SPECIFICATIONS, DIVISION 15 AND 16.

C. DUE TO THE SCALING OF DRAWINGS, IT IS NOT POSSIBLE TO SHOW EQUIPMENT LOCATIONS WITH PINPOINT ACCURACY. EQUIPMENT LOCATIONS ARE SUBJECT TO ENGINEER'S APPROVAL.

D. HANDHOLES MAY BE INSTALLED AT SUITABLE LOCATIONS AT CONTRACTOR'S OPTION. COORDINATE WITH GENERAL CONTRACTORS.

E. COORDINATE WITH GENERAL AND MECHANICAL CONTRACTORS. HVAC EQUIPMENT, CONTROL WIRING, AND THERMOSTAT INSTALLATION SHOWN ON SHEETS ELSEWHERE. SEE ALSO SPECIFICATIONS DIVISION 15.

F. SEE SPECIFICATIONS FOR ADDITIONAL DETAILS.

G. DIRECT ALL QUESTIONS TO: BOLTON & MENK, INC. (507-625-4171)

H. ELECTRICAL CONTRACTOR SHALL REMOVE ALL CONTROL WIRING BACK TO SOURCE AFTER NEW CONTROLS ARE IN SERVICE. NO ABANDONED WIRE SHALL REMAIN. SEAL ALL ABANDONED CONDUIT AT FLOOR.

I. CONTRACTOR SHALL COMPLETE ALL WORK SO THAT PLANT REMAINS IN OPERATION. SEE DIVISION 1 FOR ADDITIONAL REQUIREMENTS. COMPLETE ALL WORK REQUIRING PLANT OPERATIONS STAFF DURING NORMAL WORK HOURS MONDAY THROUGH FRIDAY UNLESS SCHEDULED WITH OWNER.

◯ PLAN NOTES

1. REMOVE ALL POWER & CONTROL TO THE EXISTING PRETREATMENT BUILDING AS REQUIRED.
2. REMOVE ALL POWER & CONTROL TO THE EXISTING CHLORINE CONTACT BASIN AS REQUIRED.
3. REMOVE ALL POWER & CONTROL TO THE EXISTING SLUDGE HOLDING NO. 2 AS REQUIRED.
4. REMOVE ALL POWER & CONTROL TO THE EXISTING SLUDGE HOLDING NO. 3 AS REQUIRED.
5. REMOVE ALL POWER & CONTROL TO THE EXISTING SLUDGE HOLDING NO. 4 AS REQUIRED.
6. SEE FILTER DEMOLITION SHEET 7.12 FOR DEMOLITION DETAILS.
7. SEE ANOXIC BASIN DEMOLITION SHEET 7.06 FOR DEMOLITION DETAILS.
8. SEE FINAL CLARIFIER DEMOLITION SHEET 7.07 FOR DEMOLITION DETAILS.
9. SEE CONTROL/ BLOWER BUILDING DEMOLITION SHEET 7.09 FOR DEMOLITION DETAILS.
10. SEE SLUDGE CONTROL BUILDING DEMOLITION SHEET 7.16 FOR DEMOLITION DETAILS.

SCALES SHOWN ON DRAWINGS ARE FOR 24"x36" SIZE SHEETS ONLY. DRAWINGS PLOTTED ON ANY OTHER SIZE SHEETS NEED TO HAVE SCALES ADJUSTED ACCORDINGLY

© Bolton & Menk, Inc. 2017, All Rights Reserved

Dolejs Associates, Inc.
Consulting Engineers
1624 N. Riverfront Dr. Mankato, Minnesota 507-625-7869
17792 Idawood Path Lakeville, Minnesota 952-435-6790

I HEREBY CERTIFY THAT THIS PLAN, SPECIFICATION OR REPORT WAS PREPARED BY ME OR UNDER MY DIRECT SUPERVISION, AND THAT I AM A DULY LICENSED PROFESSIONAL ENGINEER UNDER THE LAWS OF THE STATE OF MINNESOTA

SIGNATURE: TYPED OR PRINTED NAME: Christopher J. Dolejs
DATE 12-04-2017 LIC. NO. 24771

BOLTON & MENK
www.bolton-menk.com

REV.	BY	DATE
A	CJD	12/04/2017

CITY OF WINDOM, MINNESOTA
2017 WASTEWATER TREATMENT FACILITY IMPROVEMENTS
WASTEWATER TREATMENT PLANT SITE PLAN
ELECTRICAL DEMOLITION

SHEET 7.01

ELECTRICAL SYMBOLS

LIGHTING FIXTURES
- LIGHT FIXTURE TYPE - REFER TO SCHEDULE
- SURFACE FIXTURE
- SURFACE FIXTURE, NIGHT LIGHT AND/OR EMERGENCY
- RECESSED DOWNLIGHT
- RECESSED DOWNLIGHT, NIGHT LIGHT AND/OR EMERGENCY
- WALL MOUNTED FIXTURE
- WALL MOUNTED FIXTURE NIGHT LIGHT AND/OR EMERGENCY
- RECESSED FLUORESCENT
- RECESSED FLUORESCENT, NIGHT LIGHT AND/OR EMERGENCY
- SURFACE FLUORESCENT
- SURFACE FLUORESCENT, NIGHT LIGHT AND/OR EMERGENCY
- TRACK LIGHTING UNIT
- RECESSED DOWNLIGHT WALLWASH / FLOOD
- CEILING MOUNTED EXIT SIGN
- WALL MOUNTED EXIT SIGN
- EMERGENCY LIGHTING UNIT W/ HEADS
- RECESSED REMOTE HEAD
- WALL MOUNTED REMOTE HEAD
- EMERGENCY LIGHTING UNIT W/O HEADS

CONTROL
- S — SINGLE POLE TOGGLE SWITCH
- S_3 — 3-WAY TOGGLE SWITCH
- S_4 — 4-WAY TOGGLE SWITCH
- S_2 — DOUBLE POLE TOGGLE SWITCH
- S_T — SWITCH WITH TIMER
- S_P — SWITCH WITH PILOT
- S_K — KEYED SWITCH
- S_M — MOTOR SWITCH
- S_{MC} — MOMENTARY CONTACT SWITCH
- S_{SC} — SPEED CONTROL SWITCH
- PUSH BUTTON
- S_D — DIMMER
- S_{D3} — 3-WAY DIMMER
- ELECTRIC THERMOSTAT
- PHOTO ELECTRIC CONTROL
- NURSE CALL
- INTERCOM
- CARD READER
- OCCUPANCY SENSOR

DEVICES
- DUPLEX RECEPTACLE
- QUAD-PLEX RECEPTACLE
- HALF SWITCHED DUPLEX RECEPTACLE
- WP — WEATHER PROOF & WEATHER RESISTANT DUPLEX RECEPTACLE
- SPECIAL PURPOSE RECEPTACLE
- FLOOR OUTLET / DEVICES AND SHOWN
- RANGE RECEPTACLE
- JUNCTION BOX
- WALL MOUNTED JUNCTION BOX
- CK — CLOCK OUTLET (UNLESS SPECIFIED AS WIRELESS)
- S — WALL SPEAKER*
- S — RECESSED CEILING SPEAKER
- M — MICROPHONE OUTLET*
- V — VOLUME CONTROL*
- TV — TELEVISION OUTLET*
- COMMUNICATIONS*
- W — WALL MOUNTED TELEPHONE OUTLET*
- BELL / BUZZER

* 1"G, EMT STUBBED UP TO ABOVE ACCESSIBLE CEILING WITH A BUSHING. DEVICES, WIRING, & COVERPLATES ARE AS SPECIFIED.

FIRE ALARM
- SD — PHOTOELECTRIC SMOKE DETECTOR
- CM — CARBON MONOXIDE DETECTOR
- H — THERMAL HEAT DETECTOR -RATE OF RISE
- H 200° — THERMAL HEAT DETECTOR - FIXED TEMPERATURE
- SD — DUCT SMOKE DETECTOR
- SD — DUCT MOUNTED SMOKE DETECTOR / DAMPER CONTROL
- SD — BEAM DETECTOR TRANSMITTER/RECEIVER
- R — SMOKE DETECTOR -RESIDENTIAL
- HORN STROBE UNIT (AUDIBLE & VISIBLE)
- STROBE UNIT (VISIBLE ONLY)
- HORN UNIT (AUDIBLE ONLY)
- SD — GUEST ROOM DEVICE - HORN / STROBE / SMOKE DETECTOR
- SD — GUEST ROOM DEVICE - HORN / SMOKE DETECTOR
- F — PULL STATION
- FIRE ALARM CONTROL PANEL
- ANNUNCIATOR
- FS — SPRINKLER FLOW SWITCH
- TS — SPRINKLER TAMPER SWITCH
- MAGNETIC DOOR HOLD OPEN
- D — SMOKE DAMPER
- C — CONTROL MODULE

MISCELLANEOUS
- HS — DEVICES MOUNTED IN COMMON OUTLET
- MOTOR CONTROLLER
- COMBINATION MOTOR CONTROLLER / DISCONNECT
- DISCONNECT SWITCH
- PANEL - REFER TO SCHEDULE
- TERMINAL CABINET
- MOTOR
- MOTOR DESIGNATION - REFER TO SCHEDULE
- PLAN NOTE
- DEMOLITION OR REVISION NOTE
- E — EMERGENCY PULL STATION
- E DL — EMERGENCY DOME LIGHT
- E — EMERGENCY CORRIDOR BELL

ANY SYMBOL MAY BE FURTHER DESIGNATED BY ONE OR MORE OF THE FOLLOWING SUBSCRIPTS
- GFCI - GROUND FAULT CIRCUIT INTERRUPTER
- WP - WEATHER PROOF
- X - EXISTING TO REMAIN
- XR - EXISTING TO BE RELOCATED
- R - EXISTING TO BE REMOVED
- RR - EXISTING TO BE REMOVED & REPLACED

HOME RUNS

L-1 / 3, 5, 7 - 1"G, 3 # 8 + GRND

CIRCUIT NO. (S) — PANEL DESIGNATION — RACEWAY SIZE AND CONDUCTORS

12 AWG. IF NO WIRE SIZE IS INDICATED, WIRE QUANTITY AS REQ'D

RACEWAY / CIRCUITS
- CONCEALED BRANCH CIRCUIT - WALL OR CEILING
- CONCEALED BRANCH CIRCUIT - UNDER FLOOR OR GROUND
- AUXILIARY SYSTEM AS NOTED OR INDICATED
- MULTI OUTLET ASSEMBLY / DEVICES AS SHOWN
- SURFACE MOUNTED RACEWAY / DEVICES AS SHOWN

ALL DEVICES TO BE INSTALLED IN A J-BOX, ALL RACEWAYS TO TERMINATE IN A J-BOX

RACEWAY MAY BE FURTHER DESIGNATED BY ONE OR MORE OF THE FOLLOWING DESIGNATIONS:
E - EXPOSED RACEWAY WM - WIREMOLD / SURFACE METAL RACEWAY

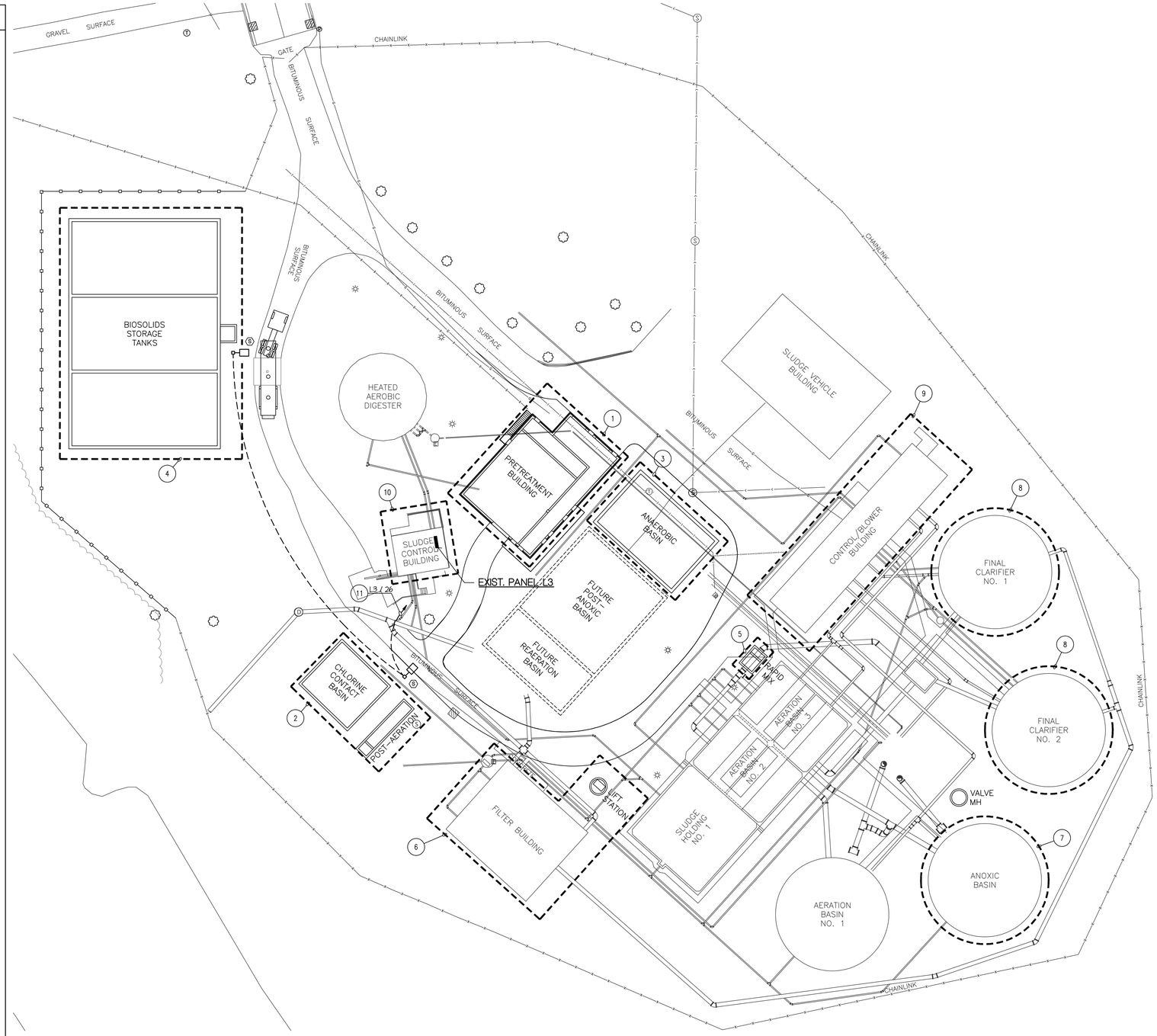

N

WASTEWATER TREATMENT PLANT - REMODEL SITE PLAN - ELECTRICAL

SCALE: 1"= 30'-0"

30 0 30
SCALE FEET

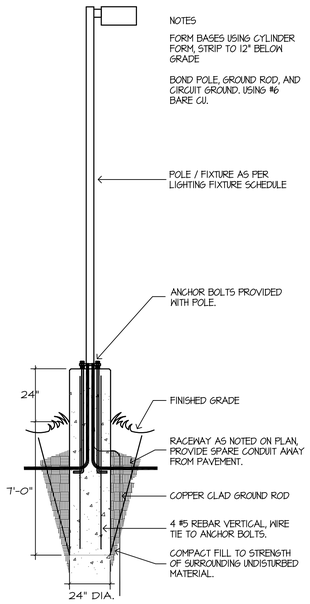

AREA LIGHTING DETAIL

NO SCALE

GENERAL NOTES

A. FOR BID PREPARATION, ELECTRICAL CONTRACTOR SHALL LOOK AT ALL DRAWINGS, AS PERTINENT INFORMATION IS NOT CONFINED TO THE 7.00 DRAWING SERIES.

B. ELECTRICAL CONTRACTOR SHALL COORDINATE WITH INSTRUMENTATION AND MECHANICAL CONTRACTORS AND SHALL BE RESPONSIBLE FOR ALL CONTROL WIRING. SEE SPECIFICATIONS, DIVISION 15 AND 16.

C. DUE TO THE SCALING OF DRAWINGS, IT IS NOT POSSIBLE TO SHOW EQUIPMENT LOCATIONS WITH PINPOINT ACCURACY. EQUIPMENT LOCATIONS ARE SUBJECT TO ENGINEER'S APPROVAL.

D. HANDHOLES MAY BE INSTALLED AT SUITABLE LOCATIONS AT CONTRACTOR'S OPTION. COORDINATE WITH GENERAL CONTRACTORS.

E. COORDINATE WITH GENERAL AND MECHANICAL CONTRACTORS. HVAC EQUIPMENT, CONTROL WIRING, AND THERMOSTAT INSTALLATION SHOWN ON SHEETS ELSEWHERE. SEE ALSO SPECIFICATIONS DIVISION 15.

F. SEE SPECIFICATIONS FOR ADDITIONAL DETAILS.

G. DIRECT ALL QUESTIONS TO: BOLTON & MENK, INC. (507-625-4171)

H. ELECTRICAL CONTRACTOR SHALL REMOVE ALL CONTROL WIRING BACK TO SOURCE AFTER NEW CONTROLS ARE IN SERVICE. NO ABANDONED WIRE SHALL REMAIN. SEAL ALL ABANDONED CONDUIT AT FLOOR.

I. CONTRACTOR SHALL COMPLETE ALL WORK SO THAT PLANT REMAINS IN OPERATION. SEE DIVISION 1 FOR ADDITIONAL REQUIREMENTS. COMPLETE ALL WORK REQUIRING PLANT OPERATIONS STAFF DURING NORMAL WORK HOURS MONDAY THROUGH FRIDAY UNLESS SCHEDULED WITH OWNER.

PLAN NOTES

1. SEE PRETREATMENT PLANS ON SHEETS 7.03 & 7.04 FOR NEW ELECTRICAL WORK.
2. SEE CHLORINE CONTACT BASIN PLAN ON SHEET 7.15 FOR NEW ELECTRICAL WORK.
3. SEE ANAEROBIC PLAN ON SHEET 7.05 FOR NEW ELECTRICAL WORK.
4. SEE BIOSOLIDS STORAGE TANK PLAN ON SHEET 7.17 FOR NEW ELECTRICAL WORK.
5. SEE RAPID MIX PLAN ON SHEET 7.14 FOR NEW ELECTRICAL WORK.
6. SEE FILTER REMODEL PLANS ON SHEETS 7.13 & 7.14 FOR NEW ELECTRICAL WORK.
7. SEE ANOXIC BASIN REMODEL PLAN ON SHEET 7.06 FOR NEW ELECTRICAL WORK.
8. SEE FINAL CLARIFIER REMODEL PLAN ON SHEET 7.08 FOR NEW ELECTRICAL WORK.
9. SEE CONTROL/ BLOWER REMODEL PLANS ON SHEETS 7.10 & 7.11 FOR NEW ELECTRICAL WORK.
10. SEE SLUDGE CONTROL REMODEL PLAN ON SHEET 7.17 FOR NEW ELECTRICAL WORK.
11. CIRCUIT TO PANEL IN SLUDGE CONTROL BUILDING. ROUTE HOMERUN VIA TIME CLOCK AS REQUIRED.

SCALES SHOWN ON DRAWINGS ARE FOR 24"x36" SIZE SHEETS ONLY. DRAWINGS PLOTTED ON ANY OTHER SIZE SHEETS NEED TO HAVE SCALES ADJUSTED ACCORDINGLY

© Bolton & Menk, Inc. 2017, All Rights Reserved

Dolejs Associates, Inc. Consulting Engineers
1624 N. Riverfront Dr. Mankato, Minnesota 507-625-7869
17792 Idawood Path Lakeville, Minnesota 952-435-6790

I HEREBY CERTIFY THAT THIS PLAN, SPECIFICATION OR REPORT WAS PREPARED BY ME OR UNDER MY DIRECT SUPERVISION, AND THAT I AM A DULY LICENSED PROFESSIONAL ENGINEER UNDER THE LAWS OF THE STATE OF MINNESOTA

SIGNATURE: Christopher J. Dolejs TYPED OR PRINTED NAME: Christopher J. Dolejs
DATE 12-04-2017 LIC. NO. 24771

BOLTON & MENK www.bolton-menk.com

REV.	BY	DATE
A	CJD	12/04/2017

CITY OF WINDOM, MINNESOTA
2017 WASTEWATER TREATMENT FACILITY IMPROVEMENTS
WASTEWATER TREATMENT PLANT SITE PLAN
ELECTRICAL POWER & LIGHTING

SHEET 7.02

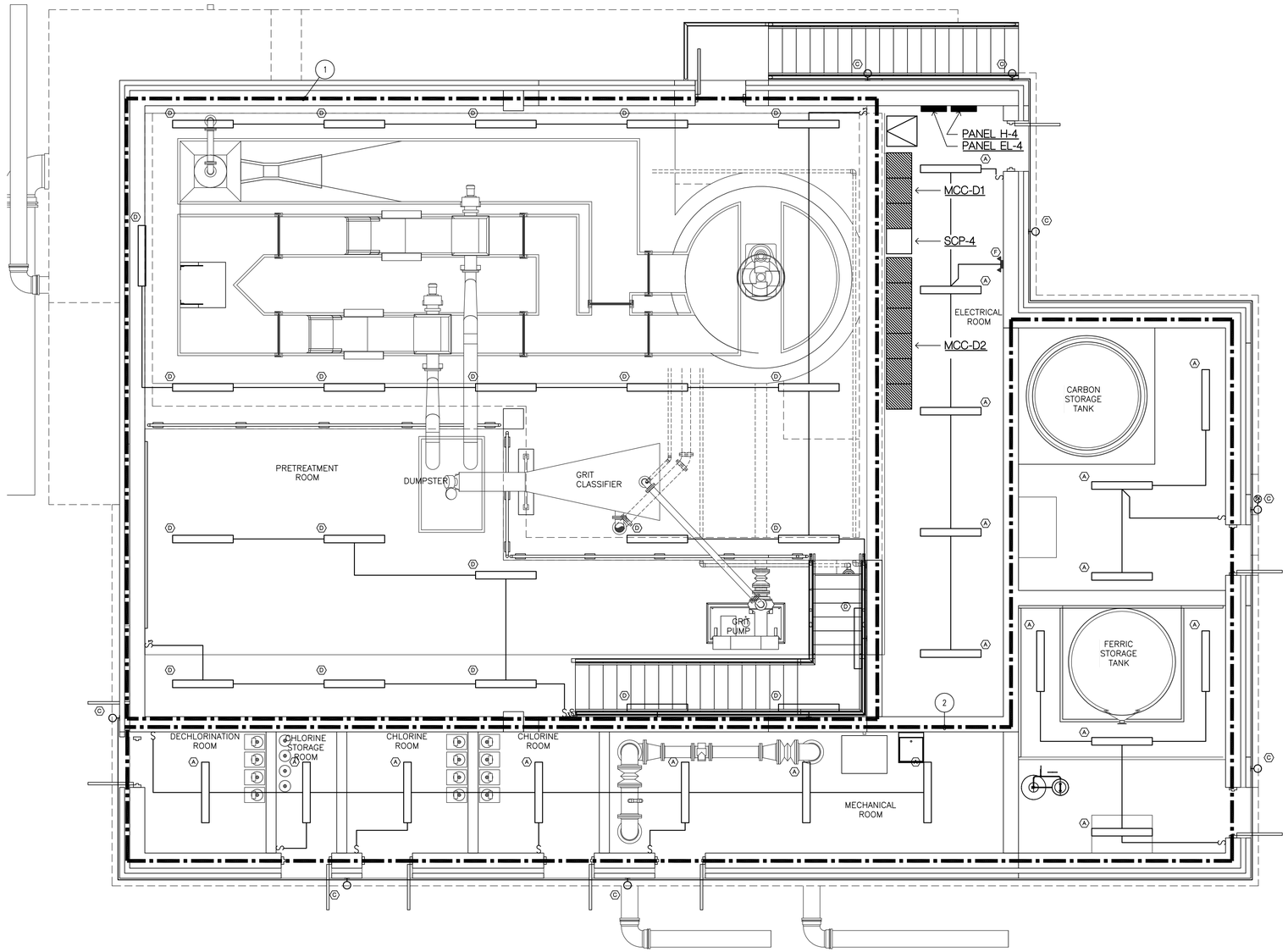

N

PRETREATMENT FLOOR PLAN - LIGHTING

SCALE: 1/4 = 1'-0"

4 0 4
SCALE FEET

GENERAL NOTES

A. FOR BID PREPARATION, ELECTRICAL CONTRACTOR SHALL LOOK AT ALL DRAWINGS, AS PERTINENT INFORMATION IS NOT CONFINED TO THE 7.00 DRAWING SERIES.

B. ELECTRICAL CONTRACTOR SHALL COORDINATE WITH INSTRUMENTATION AND MECHANICAL CONTRACTORS AND SHALL BE RESPONSIBLE FOR ALL CONTROL WIRING. SEE SPECIFICATIONS, DIVISION 15 AND 16.

C. DUE TO THE SCALING OF DRAWINGS, IT IS NOT POSSIBLE TO SHOW EQUIPMENT LOCATIONS WITH PINPOINT ACCURACY. EQUIPMENT LOCATIONS ARE SUBJECT TO ENGINEER'S APPROVAL.

D. HANDHOLES MAY BE INSTALLED AT SUITABLE LOCATIONS AT CONTRACTOR'S OPTION. COORDINATE WITH GENERAL CONTRACTORS.

E. COORDINATE WITH GENERAL AND MECHANICAL CONTRACTORS. HVAC EQUIPMENT, CONTROL WIRING, AND THERMOSTAT INSTALLATION SHOWN ON SHEETS ELSEWHERE. SEE ALSO SPECIFICATIONS DIVISION 15.

F. SEE SPECIFICATIONS FOR ADDITIONAL DETAILS.

G. DIRECT ALL QUESTIONS TO: BOLTON & MENK, INC. (507-625-4171)

H. ELECTRICAL CONTRACTOR SHALL REMOVE ALL CONTROL WIRING BACK TO SOURCE AFTER NEW CONTROLS ARE IN SERVICE. NO ABANDONED WIRE SHALL REMAIN. SEAL ALL ABANDONED CONDUIT AT FLOOR.

I. CONTRACTOR SHALL COMPLETE ALL WORK SO THAT PLANT REMAINS IN OPERATION. SEE DIVISION 1 FOR ADDITIONAL REQUIREMENTS. COMPLETE ALL WORK REQUIRING PLANT OPERATIONS STAFF DURING NORMAL WORK HOURS MONDAY THROUGH FRIDAY UNLESS SCHEDULED WITH OWNER.

PLAN NOTES

1. ELECTRICAL CLASSIFICATION FOR THIS AREA IS CLASS I, DIVISION I, GROUP D.
2. CHEMICAL AREA: USE SCHEDULE 80 PVC CONDUIT W/PVC BOXES, FITTINGS, ETC. & ALL STAINLESS STEEL SUPPORTING HARDWARE. PROVIDE GROUND CONDUCTOR PER NEC. MAKE CONDUIT TRANSITION ON EXTERIOR OF CHEMICAL ROOM WALL. TYPICAL FOR POLYPHOSPHATE, FLUORIDE, AND CHLORINE ROOMS.

SCALES SHOWN ON DRAWINGS ARE FOR 24"x36" SIZE SHEETS ONLY. DRAWINGS PLOTTED ON ANY OTHER SIZE SHEETS NEED TO HAVE SCALES ADJUSTED ACCORDINGLY

© Bolton & Menk, Inc. 2017, All Rights Reserved

0 1 2 3 4 6 8 12
Graphic Scale for 1/4"=1'-0"

Dolejs Associates, Inc.
Consulting Engineers
1624 N. Riverfront Dr.
Mankato, Minnesota
507-625-7869
17792 Idawood Path
Lakeville, Minnesota
952-435-6790

I HEREBY CERTIFY THAT THIS PLAN, SPECIFICATION OR REPORT WAS PREPARED BY ME OR UNDER MY DIRECT SUPERVISION, AND THAT I AM A DULY LICENSED PROFESSIONAL ENGINEER UNDER THE LAWS OF THE STATE OF MINNESOTA

SIGNATURE: TYPED OR PRINTED NAME: Christopher J. Dolejs
DATE 12-04-2017 LIC. NO. 24771

BOLTON & MENK
www.bolton-menk.com

REV.	BY	DATE
A	CJD	12/04/2017

CITY OF WINDOM, MINNESOTA
2017 WASTEWATER TREATMENT FACILITY IMPROVEMENTS
PRETREATMENT FLOOR PLAN – LIGHTING

SHEET 7.03

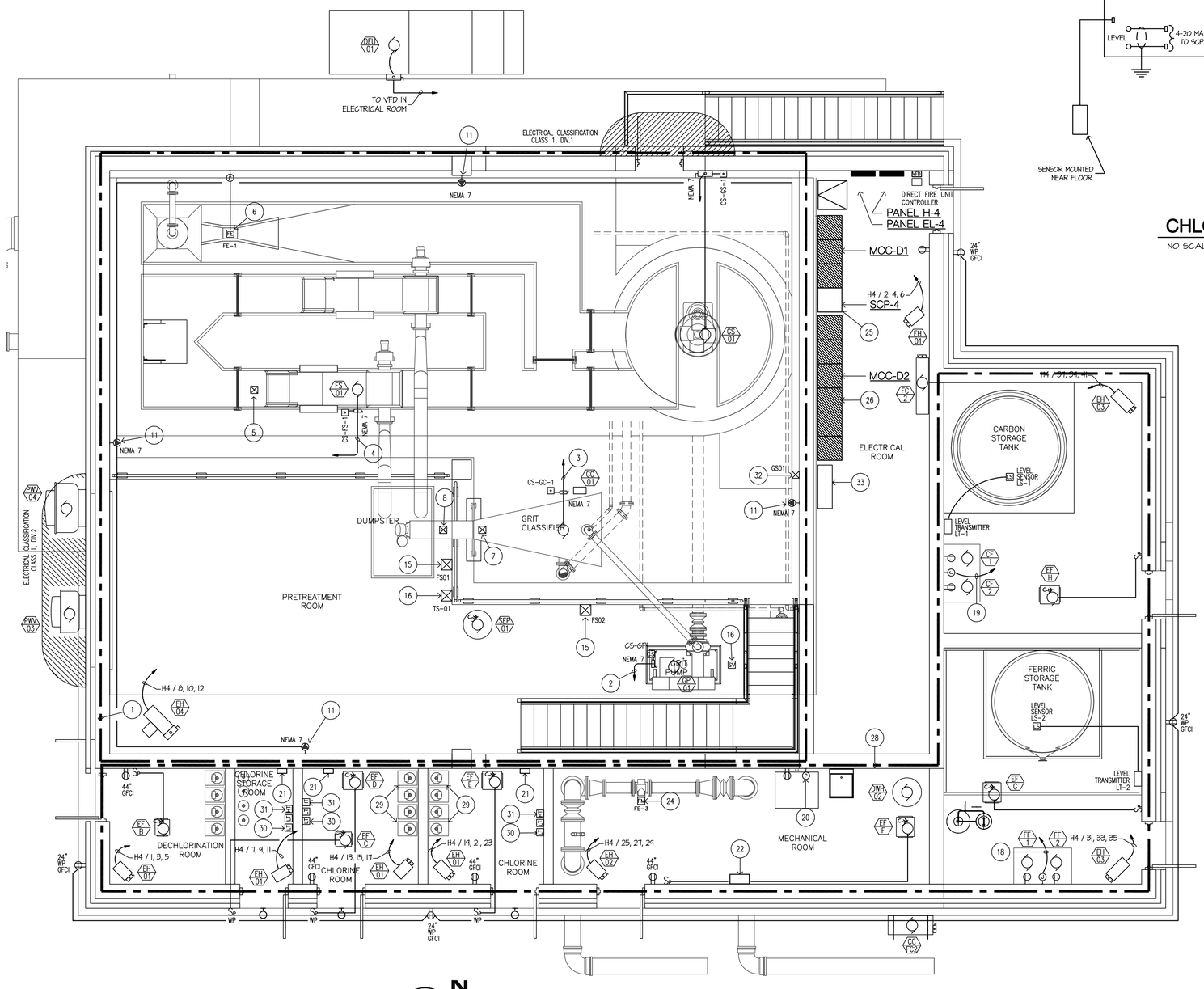

PRETREATMENT FLOOR PLAN - POWER

SCALE: 1/4 = 1'-0"

SCALE 4 0 4 FEET

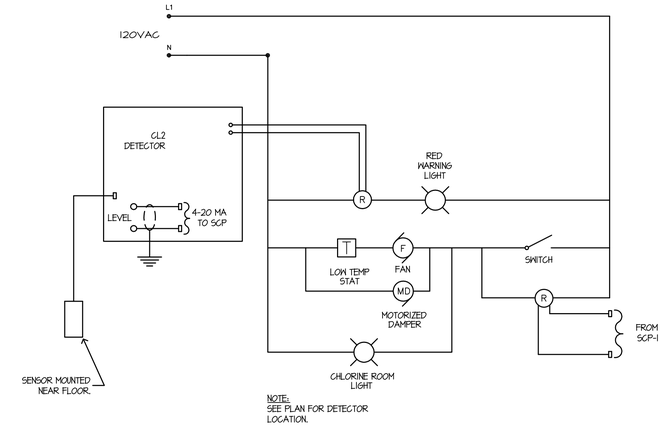

CHLORINE DETECTOR SCHEMATIC

NO SCALE

GENERAL NOTES

A. FOR BID PREPARATION, ELECTRICAL CONTRACTOR SHALL LOOK AT ALL DRAWINGS, AS PERTINENT INFORMATION IS NOT CONFINED TO THE 7.00 DRAWING SERIES.

B. ELECTRICAL CONTRACTOR SHALL COORDINATE WITH INSTRUMENTATION AND MECHANICAL CONTRACTORS AND SHALL BE RESPONSIBLE FOR ALL CONTROL WIRING. SEE SPECIFICATIONS, DIVISION 15 AND 16.

C. DUE TO THE SCALING OF DRAWINGS, IT IS NOT POSSIBLE TO SHOW EQUIPMENT LOCATIONS WITH PINPOINT ACCURACY. EQUIPMENT LOCATIONS ARE SUBJECT TO ENGINEER'S APPROVAL.

D. HANDHOLES MAY BE INSTALLED AT SUITABLE LOCATIONS AT CONTRACTOR'S OPTION. COORDINATE WITH GENERAL CONTRACTORS.

E. COORDINATE WITH GENERAL AND MECHANICAL CONTRACTORS. HVAC EQUIPMENT, CONTROL WIRING, AND THERMOSTAT INSTALLATION SHOWN ON SHEETS ELSEWHERE. SEE ALSO SPECIFICATIONS DIVISION 15.

F. SEE SPECIFICATIONS FOR ADDITIONAL DETAILS.

G. DIRECT ALL QUESTIONS TO: BOLTON & MENK, INC. (507-625-4171)

H. ELECTRICAL CONTRACTOR SHALL REMOVE ALL CONTROL WIRING BACK TO SOURCE AFTER NEW CONTROLS ARE IN SERVICE. NO ABANDONED WIRE SHALL REMAIN. SEAL ALL ABANDONED CONDUIT AT FLOOR.

I. CONTRACTOR SHALL COMPLETE ALL WORK SO THAT PLANT REMAINS IN OPERATION. SEE DIVISION 1 FOR ADDITIONAL REQUIREMENTS. COMPLETE ALL WORK REQUIRING PLANT OPERATIONS STAFF DURING NORMAL WORK HOURS MONDAY THROUGH FRIDAY UNLESS SCHEDULED WITH OWNER.

PLAN NOTES

1. ELECTRICAL CLASSIFICATION FOR THIS AREA IS CLASS I, DIVISION I, GROUP D.
2. GRIT PUMP. 3/4"C, 3-#12+6RND POWER AND 3/4"C, 6-#14 CONTROL TO MCC-2.
3. GRIT CLASSIFIER. 3/4"C, 3-#12 + 6RND AND 3/4"C, 6-#14 CONTROL TO MCC-2.
4. FINE SCREEN. 3/4"C, 3-#12 +6RND AND 3/4"C, 6-#14 CONTROL TO MCC-2.
5. HIGH LEVEL FLOAT SWITCH. 3/4"C, 2-#14 TO SCP-2. MOUNT PER SCREEN MANUFACTURES RECOMMENDATIONS.
6. ULTRASONIC LEVEL TRANSDUCER. PROVIDE 3/4"C, 2-TWP TO SCP-2 AND 3/4"C, 2#-12+6RND FROM PANEL L-201. MOUNT PER SCREEN MANUFACTURES RECOMMENDATIONS.
7. SOLENOID VALVE. PROVIDE 3/4"C, 2-#14 TO SCP-2.
8. LIMIT SWITCH: PROVIDE 3/4"C, 2-#14 TO SCP-2.
9. FINE SCREEN CONTROL PANEL.
10. FE-1 FLOW TRANSMITTER. VERIFY EXACT LOCATION.
11. PROVIDE 120V, 20A, NEMA 7 EXPLOSION PROOF RECEPTACLE.
12. SEWAGE PUMP CONTROL PANEL. PROVIDE 6-#16 TO SCP-2.
13. INFLUENT SAMPLER. PROVIDE 2 TWP TO SCP-2.
14. GAS SENSOR. MOUNT SENSOR PER MANUFACTURES REQUIREMENTS. SEE SPECIFICATION 26450 FOR DETAILS.
15. FLOOD SWITCH. MOUNT SENSOR PER MANUFACTURES REQUIREMENTS. SEE SPECIFICATION 26450 FOR DETAILS.
16. SEAL WATER SOLENOID VALVE. PROVIDE 3/4"C, 2-#14 TO SCP-2.
17. TEMPERATURE SWITCH. MOUNT SENSOR PER MANUFACTURES REQUIREMENTS. SEE SPECIFICATION 26450 FOR DETAILS.
18. FERRIC FEED PUMPS CONTROLLED OUTLET. PROVIDE ENGRAVED NAMEPLATES PER SPEC. COORDINATE MOUNTING HEIGHTS. PROVIDE CONTROLLED OUTLET AND TWO TWISTED PAIR (TSP) TO SCP-D. PROVIDE A 3/4" C, 3-#14 FROM PANEL EH-4 AND 3/4"C, 1 TSP FROM PUMP TO SCP-D.
19. CARBON FEED PUMPS CONTROLLED OUTLET. PROVIDE ENGRAVED NAMEPLATES PER SPEC. COORDINATE MOUNTING HEIGHTS. PROVIDE CONTROLLED OUTLET AND TWO TWISTED PAIR (TSP) TO SCP-D. PROVIDE A 3/4"C, 3=#14 FROM PANEL EH-4 AND 3/4"C, 1 TSP FROM PUMP TO SCP-D.
20. INFLUENT SAMPLER. PROVIDE 2 TWP TO SCP-D.
21. CHLORINE LEAK SENSOR.
22. CHLORINE LEAK DETECTOR. PROVIDE A 3/4"G WITH 2-#16 AND 3/4"C, 1 TSP FROM DETECTOR TO SCP-1 FOR ALARM AND LEVEL.
23. TEMPERATURE SENSOR. MOUNT AT 36" A.F.F.
24. MAGNETIC FLOW METER. PROVIDE A 3/4" C, 3-#14 FROM HP-1 AND 3/4"C, 1 TSP FROM METER TO SCP-D.
25. SUPERVISORY CONTROL PANEL (SCP). PROVIDE 20A/120V CIRCUIT FROM ELECTRICAL PANEL HP-1.
26. 3" HIGH CONCRETE PAD WITH 3/4" CHAMFERED EDGE.
27. HSP CHLORINE GAS CONTROL VALVE (DIV. II) CONFIRM EXACT LOCATION. PROVIDE 3/4"C, 2-#14 TO RED WARNING LIGHT ABOVE CHLORINE DOOR AND 2-#16 TO CHLORINE VALVE. PROVIDE II-TSP FROM DETECTOR TO SCP-D FOR ALARM.
28. CHEMICAL AREA: USE SCHEDULE 80 PVC CONDUIT W/PVC BOXES, FITTINGS, ETC. & ALL STAINLESS STEEL SUPPORTING HARDWARE. PROVIDE GROUND CONDUCTOR PER NEC. MAKE CONDUIT TRANSITION ON EXTERIOR OF CHEMICAL ROOM WALL. TYPICAL FOR POLYPHOSPHATE, FLUORIDE, AND CHLORINE ROOMS.
29. DUAL GAS CYLINDER SCALE WITH INDICATOR. PROVIDE 120V WATER-RESISTANT POWER OUTLET TO PANEL PP-1. PROVIDE 2 TWP TO SCP-1. PROVIDE A 4"X4"x 2" BOX WITHIN 30" OF CHLORINE SCALE "HEAD".
30. PROVIDE TWO LOW TEMPERATURE SWITCHES IN CHLORINE ROOM. ONE WILL BE WIRED IN SERIES WITH EF-01 FAN FOR FREEZE PROTECTION AND THE OTHER WILL PROVIDE AN ALARM FOR LOW TEMP TO THE SUPERVISORY CONTROL PANEL.
31. HIGH TEMP SWITCH. MOUNT 36" A.F.F.
32. GAS SENSOR. MOUNT SENSOR PER MANUFACTURES REQUIREMENTS. SEE SPECIFICATION 26450 FOR DETAILS.
33. FINE SCREEN CONTROL PANEL.

SCALES SHOWN ON DRAWINGS ARE FOR 24"x36" SIZE SHEETS ONLY. DRAWINGS PLOTTED ON ANY OTHER SIZE SHEETS NEED TO HAVE SCALES ADJUSTED ACCORDINGLY

© Bolton & Menk, Inc. 2017, All Rights Reserved

0 1 2 3 4 6 8 12
Graphic Scale for 1/4"=1'-0"

Dolejs Associates, Inc.
Consulting Engineers
1624 N. Riverfront Dr.
Mankato, Minnesota
507-625-7869
17792 Idawood Path
Lakeville, Minnesota
952-435-6790

I HEREBY CERTIFY THAT THIS PLAN, SPECIFICATION OR REPORT WAS PREPARED BY ME OR UNDER MY DIRECT SUPERVISION, AND THAT I AM A DULY LICENSED PROFESSIONAL ENGINEER UNDER THE LAWS OF THE STATE OF MINNESOTA

SIGNATURE: TYPED OR PRINTED NAME: Christopher J. Dolejs
DATE 12-04-2017 LIC. NO. 24771

BOLTON & MENK

www.bolton-menk.com

REV.	BY	DATE
A	CJD	12/04/2017

CITY OF WINDOM, MINNESOTA
2017 WASTEWATER TREATMENT FACILITY IMPROVEMENTS
PRETREATMENT BUILDING – ELECTRICAL POWER PLAN

SHEET 7.04

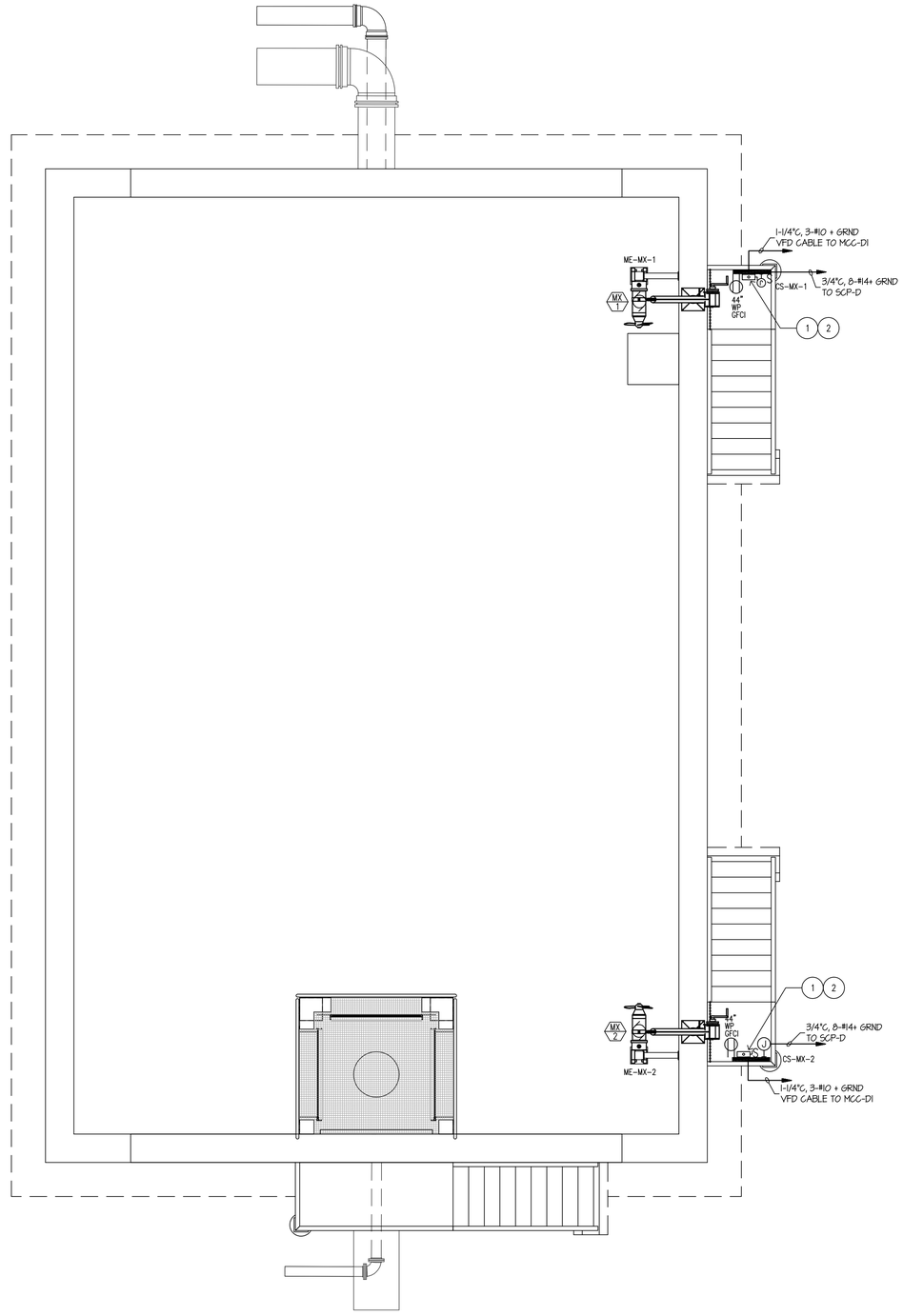

N

ANAEROBIC BASIN - ELECTRICAL POWER

SCALE: 1/4"= 1'-0"

4 0 4
SCALE FEET

GENERAL NOTES

A. FOR BID PREPARATION, ELECTRICAL CONTRACTOR SHALL LOOK AT ALL DRAWINGS, AS PERTINENT INFORMATION IS NOT CONFINED TO THE 7.00 DRAWING SERIES.

B. ELECTRICAL CONTRACTOR SHALL COORDINATE WITH INSTRUMENTATION AND MECHANICAL CONTRACTORS AND SHALL BE RESPONSIBLE FOR ALL CONTROL WIRING. SEE SPECIFICATIONS, DIVISION 15 AND 16.

C. DUE TO THE SCALING OF DRAWINGS, IT IS NOT POSSIBLE TO SHOW EQUIPMENT LOCATIONS WITH PINPOINT ACCURACY. EQUIPMENT LOCATIONS ARE SUBJECT TO ENGINEER'S APPROVAL.

D. HANDHOLES MAY BE INSTALLED AT SUITABLE LOCATIONS AT CONTRACTOR'S OPTION. COORDINATE WITH GENERAL CONTRACTORS.

E. COORDINATE WITH GENERAL AND MECHANICAL CONTRACTORS. HVAC EQUIPMENT, CONTROL WIRING, AND THERMOSTAT INSTALLATION SHOWN ON SHEETS ELSEWHERE. SEE ALSO SPECIFICATIONS DIVISION 15.

F. SEE SPECIFICATIONS FOR ADDITIONAL DETAILS.

G. DIRECT ALL QUESTIONS TO: BOLTON & MENK, INC. (507-625-4171)

H. ELECTRICAL CONTRACTOR SHALL REMOVE ALL CONTROL WIRING BACK TO SOURCE AFTER NEW CONTROLS ARE IN SERVICE. NO ABANDONED WIRE SHALL REMAIN. SEAL ALL ABANDONED CONDUIT AT FLOOR.

I. CONTRACTOR SHALL COMPLETE ALL WORK SO THAT PLANT REMAINS IN OPERATION. SEE DIVISION 1 FOR ADDITIONAL REQUIREMENTS. COMPLETE ALL WORK REQUIRING PLANT OPERATIONS STAFF DURING NORMAL WORK HOURS MONDAY THROUGH FRIDAY UNLESS SCHEDULED WITH OWNER.

◯ PLAN NOTES

1. PROVIDE A UNISTRUT STAND ON HANDRAIL TO MOUNT DISCONNECT, CONTROL STATION AND CONTROL JUNCTION BOX.
2. INTERLOCK DISCONNECT WITH VFD SHUT DOWN.

SCALES SHOWN ON DRAWINGS ARE FOR 24"x36" SIZE SHEETS ONLY. DRAWINGS PLOTTED ON ANY OTHER SIZE SHEETS NEED TO HAVE SCALES ADJUSTED ACCORDINGLY

© Bolton & Menk, Inc. 2017, All Rights Reserved

0 1 2 3 4 6 8 12
Graph Scale for 1/4"=1'-0"

Dolejs Associates, Inc.
Consulting Engineers
1624 N. Riverfront Dr. Mankato, Minnesota 507-625-7869
17792 Idlewood Path Lakeville, Minnesota 952-435-6790

I HEREBY CERTIFY THAT THIS PLAN, SPECIFICATION OR REPORT WAS PREPARED BY ME OR UNDER MY DIRECT SUPERVISION, AND THAT I AM A DULY LICENSED PROFESSIONAL ENGINEER UNDER THE LAWS OF THE STATE OF MINNESOTA

SIGNATURE: TYPED OR PRINTED NAME: Christopher J. Dolejs
DATE 12-04-2017 LIC. NO. 24771

BOLTON & MENK
www.bolton-menk.com

REV.	BY	DATE
A	CJD	12/04/2017

CITY OF WINDOM, MINNESOTA
2017 WASTEWATER TREATMENT FACILITY IMPROVEMENTS
ANAEROBIC BASIN
ELECTRICAL POWER PLAN

SHEET 7.05

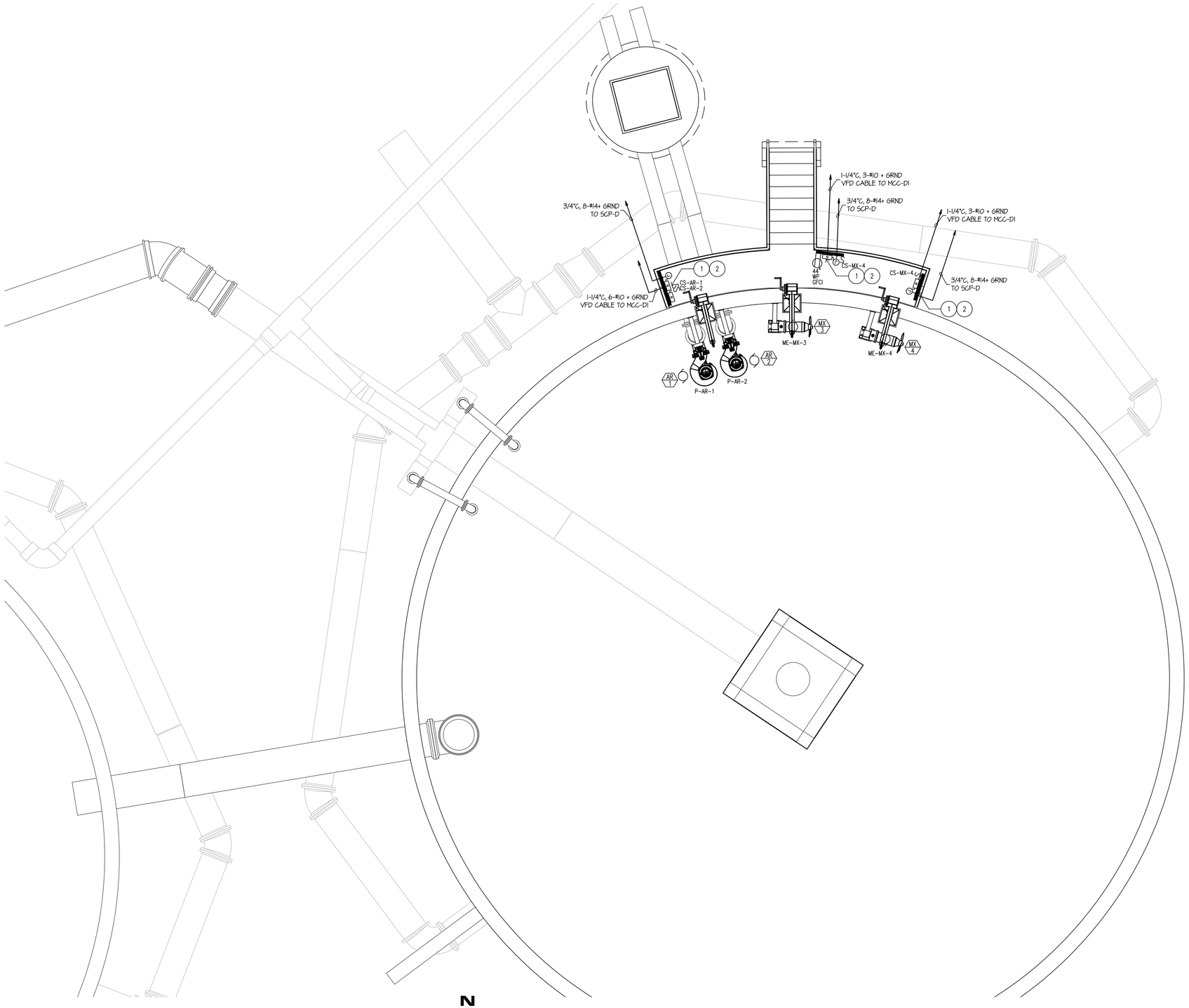

N

ANOXIC BASIN - ELECTRICAL POWER

SCALE: 1/4"= 1'-0"

4 0 4
SCALE FEET

GENERAL NOTES

A. FOR BID PREPARATION, ELECTRICAL CONTRACTOR SHALL LOOK AT ALL DRAWINGS, AS PERTINENT INFORMATION IS NOT CONFINED TO THE 7.00 DRAWING SERIES.

B. ELECTRICAL CONTRACTOR SHALL COORDINATE WITH INSTRUMENTATION AND MECHANICAL CONTRACTORS AND SHALL BE RESPONSIBLE FOR ALL CONTROL WIRING. SEE SPECIFICATIONS, DIVISION 15 AND 16.

C. DUE TO THE SCALING OF DRAWINGS, IT IS NOT POSSIBLE TO SHOW EQUIPMENT LOCATIONS WITH PINPOINT ACCURACY. EQUIPMENT LOCATIONS ARE SUBJECT TO ENGINEER'S APPROVAL.

D. HANDHOLES MAY BE INSTALLED AT SUITABLE LOCATIONS AT CONTRACTOR'S OPTION. COORDINATE WITH GENERAL CONTRACTORS.

E. COORDINATE WITH GENERAL AND MECHANICAL CONTRACTORS. HVAC EQUIPMENT, CONTROL WIRING, AND THERMOSTAT INSTALLATION SHOWN ON SHEETS ELSEWHERE. SEE ALSO SPECIFICATIONS DIVISION 15.

F. SEE SPECIFICATIONS FOR ADDITIONAL DETAILS.

G. DIRECT ALL QUESTIONS TO: BOLTON & MENK, INC. (507-625-4171)

H. ELECTRICAL CONTRACTOR SHALL REMOVE ALL CONTROL WIRING BACK TO SOURCE AFTER NEW CONTROLS ARE IN SERVICE. NO ABANDONED WIRE SHALL REMAIN. SEAL ALL ABANDONED CONDUIT AT FLOOR.

I. CONTRACTOR SHALL COMPLETE ALL WORK SO THAT PLANT REMAINS IN OPERATION. SEE DIVISION 1 FOR ADDITIONAL REQUIREMENTS. COMPLETE ALL WORK REQUIRING PLANT OPERATIONS STAFF DURING NORMAL WORK HOURS MONDAY THROUGH FRIDAY UNLESS SCHEDULED WITH OWNER.

PLAN NOTES

1. PROVIDE A UNISTRUT STAND ON HANDRAIL TO MOUNT DISCONNECT, CONTROL STATION AND CONTROL JUNCTION BOX.
2. INTERLOCK DISCONNECT WITH VFD SHUT DOWN.

SCALES SHOWN ON DRAWINGS ARE FOR 24"x36" SIZE SHEETS ONLY. DRAWINGS PLOTTED ON ANY OTHER SIZE SHEETS NEED TO HAVE SCALES ADJUSTED ACCORDINGLY

© Bolton & Menk, Inc. 2017, All Rights Reserved

0 1 2 3 4 6 8 12
Graphic Scale for 1/4"=1'-0"

Dolejs Associates, Inc.
Consulting Engineers
1624 N. Riverfront Dr. Mankato, Minnesota 507-625-7869
17792 Idawood Path Lakeville, Minnesota 952-435-6790

I HEREBY CERTIFY THAT THIS PLAN, SPECIFICATION OR REPORT WAS PREPARED BY ME OR UNDER MY DIRECT SUPERVISION, AND THAT I AM A DULY LICENSED PROFESSIONAL ENGINEER UNDER THE LAWS OF THE STATE OF MINNESOTA

SIGNATURE: TYPED OR PRINTED NAME: Christopher J. Dolejs
DATE 12-04-2017 LIC. NO. 24771

BOLTON & MENK
www.bolton-menk.com

REV.	BY	DATE
A	CJD	12/04/2017

CITY OF WINDOM, MINNESOTA
2017 WASTEWATER TREATMENT FACILITY IMPROVEMENTS
ANOXIC BASIN
ELECTRICAL POWER PLAN

SHEET 7.06

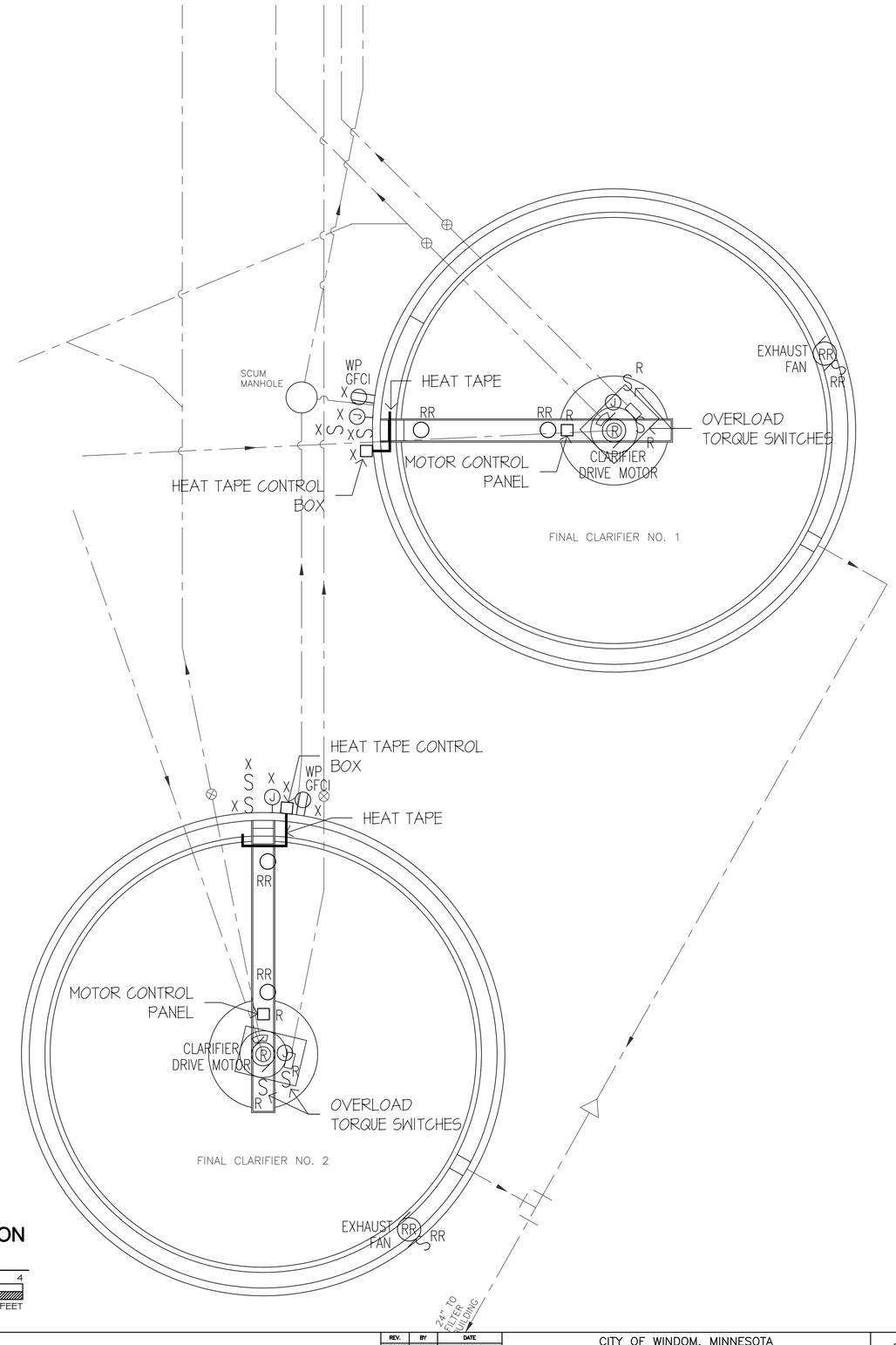

GENERAL NOTES

A. FOR BID PREPARATION, ELECTRICAL CONTRACTOR SHALL LOOK AT ALL DRAWINGS, AS PERTINENT INFORMATION IS NOT CONFINED TO THE 7.00 DRAWING SERIES.

B. ELECTRICAL CONTRACTOR SHALL COORDINATE WITH INSTRUMENTATION AND MECHANICAL CONTRACTORS AND SHALL BE RESPONSIBLE FOR ALL CONTROL WIRING. SEE SPECIFICATIONS, DIVISION 15 AND 16.

C. DUE TO THE SCALING OF DRAWINGS, IT IS NOT POSSIBLE TO SHOW EQUIPMENT LOCATIONS WITH PINPOINT ACCURACY. EQUIPMENT LOCATIONS ARE SUBJECT TO ENGINEER'S APPROVAL.

D. COORDINATE WITH GENERAL AND MECHANICAL CONTRACTORS. HVAC EQUIPMENT, CONTROL WIRING, AND THERMOSTAT INSTALLATION SHOWN ON SHEETS ELSEWHERE. SEE ALSO SPECIFICATIONS DIVISION 15.

E. SEE SPECIFICATIONS FOR ADDITIONAL DETAILS.

F. DIRECT ALL QUESTIONS TO: BOLTON & MENK, INC. (507-625-4171)

G. ELECTRICAL CONTRACTOR SHALL REMOVE ALL CONTROL WIRING BACK TO SOURCE AFTER NEW CONTROLS ARE IN SERVICE. NO ABANDONED WIRE SHALL REMAIN. SEAL ALL ABANDONED CONDUIT AT FLOOR.

H. CONTRACTOR SHALL COMPLETE ALL WORK SO THAT PLANT REMAINS IN OPERATION. SEE DIVISION 1 FOR ADDITIONAL REQUIREMENTS. COMPLETE ALL WORK REQUIRING PLANT OPERATIONS STAFF DURING NORMAL WORK HOURS MONDAY THROUGH FRIDAY UNLESS SCHEDULED WITH OWNER.

N

FINAL CLARIFIERS DEMOLITION PLAN - ELECTRICAL

SCALE: 1/4"= 1'-0"

4 0 4
SCALE FEET

SCALES SHOWN ON DRAWINGS ARE FOR 24"x36" SIZE SHEETS ONLY. DRAWINGS PLOTTED ON ANY OTHER SIZE SHEETS NEED TO HAVE SCALES ADJUSTED ACCORDINGLY

© Bolton & Menk, Inc. 2017, All Rights Reserved

0 1 2 3 4 6 8 12
Graphic Scale for 1/4"=1'-0"

Dolejs Associates, Inc.
Consulting Engineers
1624 N. Riverfront Dr.
Mankato, Minnesota
507-625-7669
17792 Idawood Path
Lakeville, Minnesota
952-435-6790

I HEREBY CERTIFY THAT THIS PLAN, SPECIFICATION OR REPORT WAS PREPARED BY ME OR UNDER MY DIRECT SUPERVISION, AND THAT I AM A DULY LICENSED PROFESSIONAL ENGINEER UNDER THE LAWS OF THE STATE OF MINNESOTA

SIGNATURE: TYPED OR PRINTED NAME: Christopher J. Dolejs
DATE 12-04-2017 LIC. NO. 24771

BOLTON & MENK
www.bolton-menk.com

REV.	BY	DATE
A	CJD	12/04/2017

CITY OF WINDOM, MINNESOTA
2017 WASTEWATER TREATMENT FACILITY IMPROVEMENTS
FINAL CLARIFIERS DEMOLITION PLAN – ELECTRICAL

SHEET 7.07

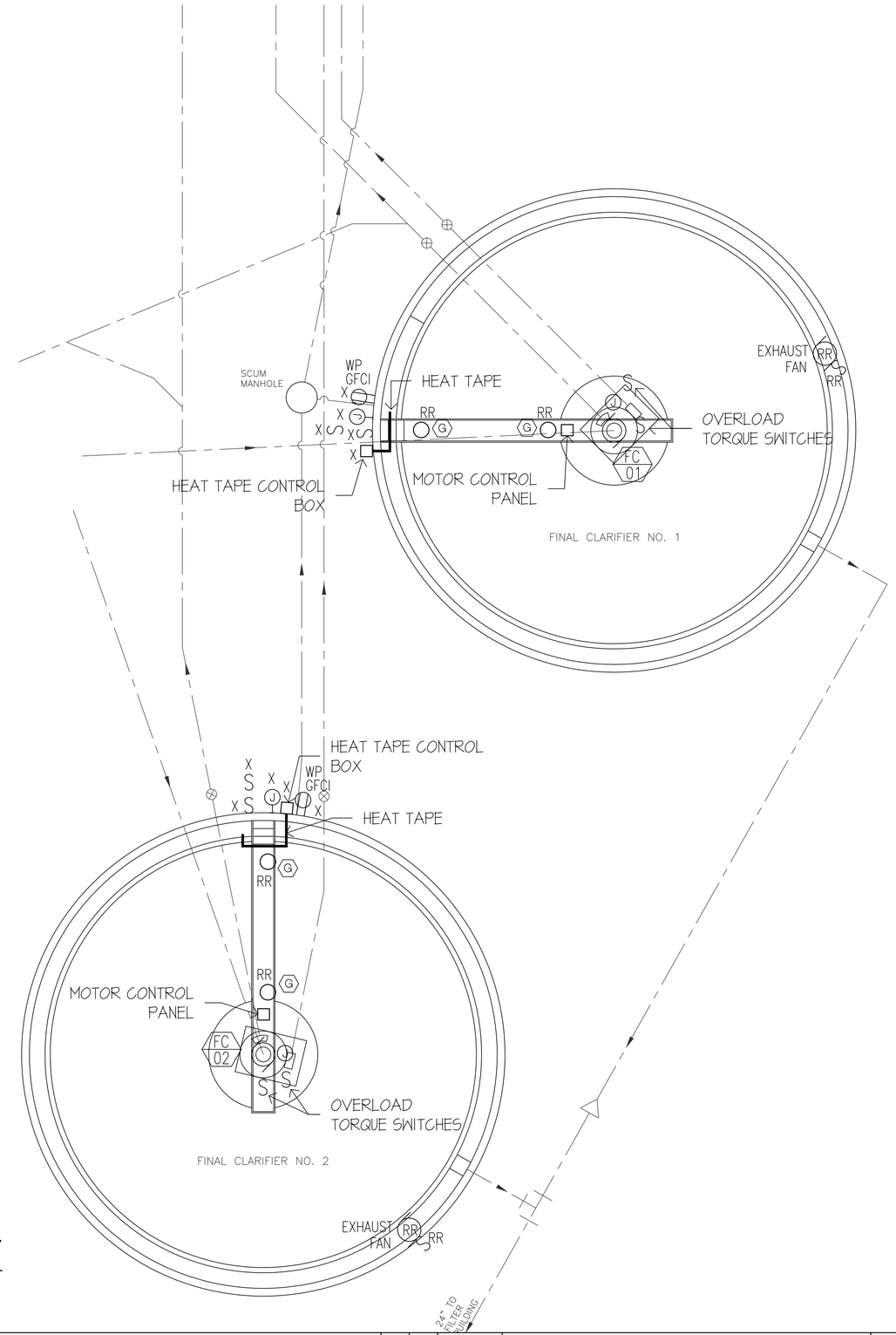

GENERAL NOTES

A. FOR BID PREPARATION, ELECTRICAL CONTRACTOR SHALL LOOK AT ALL DRAWINGS, AS PERTINENT INFORMATION IS NOT CONFINED TO THE 7.00 DRAWING SERIES.

B. ELECTRICAL CONTRACTOR SHALL COORDINATE WITH INSTRUMENTATION AND MECHANICAL CONTRACTORS AND SHALL BE RESPONSIBLE FOR ALL CONTROL WIRING. SEE SPECIFICATIONS, DIVISION 15 AND 16.

C. DUE TO THE SCALING OF DRAWINGS, IT IS NOT POSSIBLE TO SHOW EQUIPMENT LOCATIONS WITH PINPOINT ACCURACY. EQUIPMENT LOCATIONS ARE SUBJECT TO ENGINEER'S APPROVAL.

D. COORDINATE WITH GENERAL AND MECHANICAL CONTRACTORS. HVAC EQUIPMENT, CONTROL WIRING, AND THERMOSTAT INSTALLATION SHOWN ON SHEETS ELSEWHERE. SEE ALSO SPECIFICATIONS DIVISION 15.

E. SEE SPECIFICATIONS FOR ADDITIONAL DETAILS.

F. DIRECT ALL QUESTIONS TO: BOLTON & MENK, INC. (507-625-4171)

G. ELECTRICAL CONTRACTOR SHALL REMOVE ALL CONTROL WIRING BACK TO SOURCE AFTER NEW CONTROLS ARE IN SERVICE. NO ABANDONED WIRE SHALL REMAIN. SEAL ALL ABANDONED CONDUIT AT FLOOR.

H. CONTRACTOR SHALL COMPLETE ALL WORK SO THAT PLANT REMAINS IN OPERATION. SEE DIVISION 1 FOR ADDITIONAL REQUIREMENTS. COMPLETE ALL WORK REQUIRING PLANT OPERATIONS STAFF DURING NORMAL WORK HOURS MONDAY THROUGH FRIDAY UNLESS SCHEDULED WITH OWNER.

N

FINAL CLARIFIERS REMODEL PLAN - ELECTRICAL

SCALE: 1/4"= 1'-0"

4 0 4
SCALE FEET

SCALES SHOWN ON DRAWINGS ARE FOR 24"x36" SIZE SHEETS ONLY. DRAWINGS PLOTTED ON ANY OTHER SIZE SHEETS NEED TO HAVE SCALES ADJUSTED ACCORDINGLY

© Bolton & Menk, Inc. 2017, All Rights Reserved

0 1 2 3 4 6 8 12
Graphic Scale for 1/4"=1'-0"

Dolejs Associates, Inc.
Consulting Engineers
1624 N. Riverfront Dr. Mankato, Minnesota 507-625-7869
17792 Idawood Path Lakeville, Minnesota 952-435-6790

I HEREBY CERTIFY THAT THIS PLAN, SPECIFICATION OR REPORT WAS PREPARED BY ME OR UNDER MY DIRECT SUPERVISION, AND THAT I AM A DULY LICENSED PROFESSIONAL ENGINEER UNDER THE LAWS OF THE STATE OF MINNESOTA

SIGNATURE: TYPED OR PRINTED NAME: Christopher J. Dolejs
DATE 12-04-2017 LIC. NO. 24771

BOLTON & MENK
www.bolton-menk.com

REV.	BY	DATE
A	CJD	12/04/2017

CITY OF WINDOM, MINNESOTA
2017 WASTEWATER TREATMENT FACILITY IMPROVEMENTS
FINAL CLARIFIERS REMODEL PLAN – ELECTRICAL

SHEET 7.08

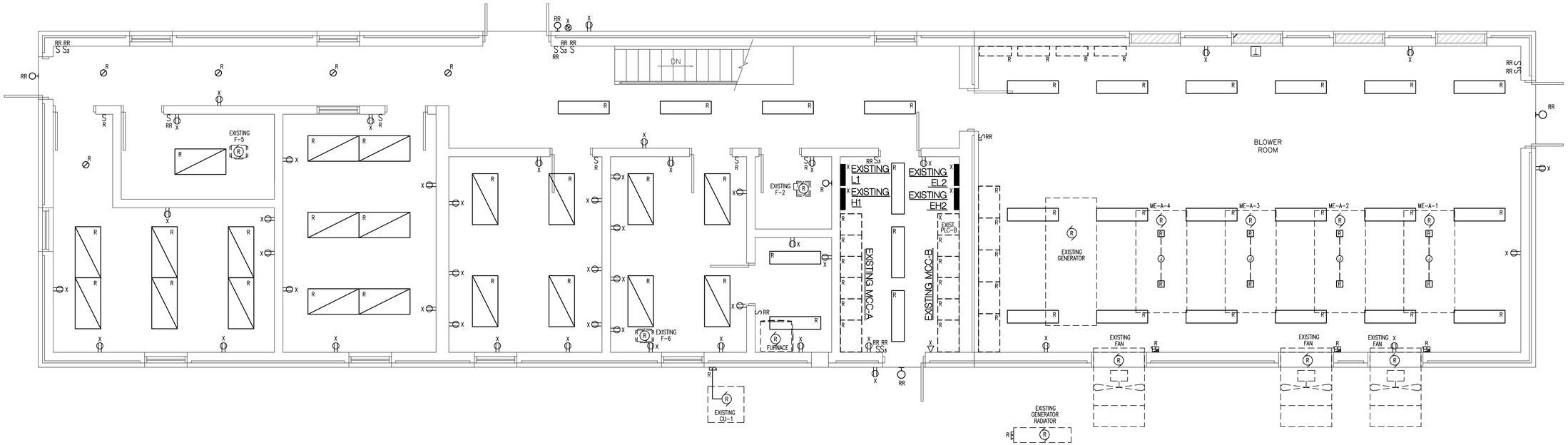

CONTROL BUILDING - UPPER LEVEL DEMOLITION - ELECTRICAL

SCALE: 1/4"= 1'-0"

SCALE 4 0 4 FEET

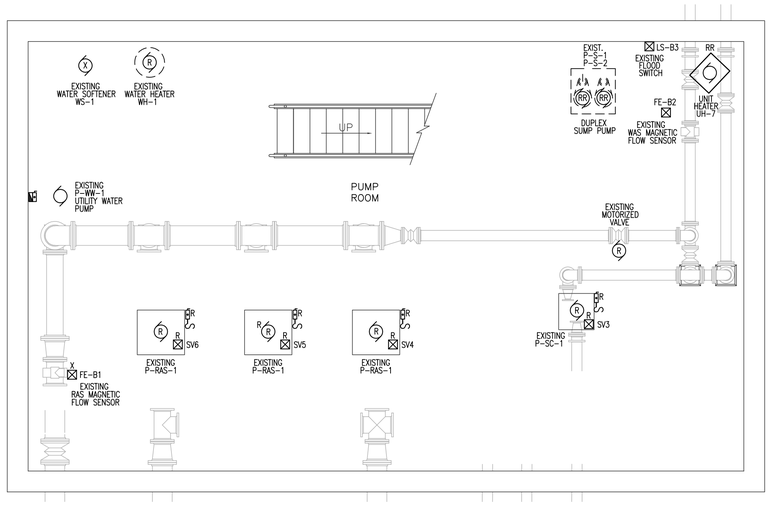

CONTROL BUILDING - LOWER LEVEL DEMOLITION - POWER

SCALE: 1/4"= 1'-0"

SCALE 4 0 4 FEET

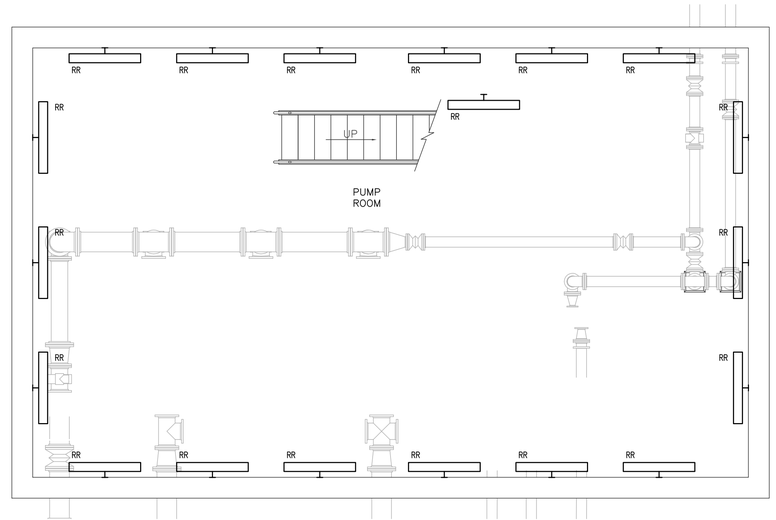

CONTROL BUILDING - LOWER LEVEL DEMOLITION - LIGHTING

SCALE: 1/4"= 1'-0"

SCALE 8 0 8 FEET

GENERAL NOTES

A. FOR BID PREPARATION, ELECTRICAL CONTRACTOR SHALL LOOK AT ALL DRAWINGS, AS PERTINENT INFORMATION IS NOT CONFINED TO THE 7.00 DRAWING SERIES.

B. ELECTRICAL CONTRACTOR SHALL COORDINATE WITH INSTRUMENTATION AND MECHANICAL CONTRACTORS AND SHALL BE RESPONSIBLE FOR ALL CONTROL WIRING. SEE SPECIFICATIONS, DIVISION 15 AND 16.

C. DUE TO THE SCALING OF DRAWINGS, IT IS NOT POSSIBLE TO SHOW EQUIPMENT LOCATIONS WITH PINPOINT ACCURACY. EQUIPMENT LOCATIONS ARE SUBJECT TO ENGINEER'S APPROVAL.

D. COORDINATE WITH GENERAL AND MECHANICAL CONTRACTORS. HVAC EQUIPMENT, CONTROL WIRING, AND THERMOSTAT INSTALLATION SHOWN ON SHEETS ELSEWHERE. SEE ALSO SPECIFICATIONS DIVISION 15.

E. SEE SPECIFICATIONS FOR ADDITIONAL DETAILS.

F. DIRECT ALL QUESTIONS TO: BOLTON & MENK, INC. (507-625-4171)

G. ELECTRICAL CONTRACTOR SHALL REMOVE ALL CONTROL WIRING BACK TO SOURCE AFTER NEW CONTROLS ARE IN SERVICE. NO ABANDONED WIRE SHALL REMAIN. SEAL ALL ABANDONED CONDUIT AT FLOOR.

H. CONTRACTOR SHALL COMPLETE ALL WORK SO THAT PLANT REMAINS IN OPERATION. SEE DIVISION 1 FOR ADDITIONAL REQUIREMENTS. COMPLETE ALL WORK REQUIRING PLANT OPERATIONS STAFF DURING NORMAL WORK HOURS MONDAY THROUGH FRIDAY UNLESS SCHEDULED WITH OWNER.

SCALES SHOWN ON DRAWINGS ARE FOR 24"x36" SIZE SHEETS ONLY. DRAWINGS PLOTTED ON ANY OTHER SIZE SHEETS NEED TO HAVE SCALES ADJUSTED ACCORDINGLY

© Bolton & Menk, Inc. 2017, All Rights Reserved

0 1 2 3 4 6 8 12
Graphic Scale for 1/4"=1'-0"

Dolejs Associates, Inc. Consulting Engineers
1624 N. Riverfront Dr. Mankato, Minnesota 507-625-7869
17792 Idawood Path Lakeville, Minnesota 952-435-6790

I HEREBY CERTIFY THAT THIS PLAN, SPECIFICATION OR REPORT WAS PREPARED BY ME OR UNDER MY DIRECT SUPERVISION, AND THAT I AM A DULY LICENSED PROFESSIONAL ENGINEER UNDER THE LAWS OF THE STATE OF MINNESOTA

SIGNATURE: TYPED OR PRINTED NAME: Christopher J. Dolejs
DATE 12-04-2017 LIC. NO. 24771

BOLTON & MENK
www.bolton-menk.com

REV.	BY	DATE
A	CJD	12/04/2017

CITY OF WINDOM, MINNESOTA
2017 WASTEWATER TREATMENT FACILITY IMPROVEMENTS
EXISTING CONTROL BUILDING – ELECTRICAL DEMOLITION

SHEET 7.09

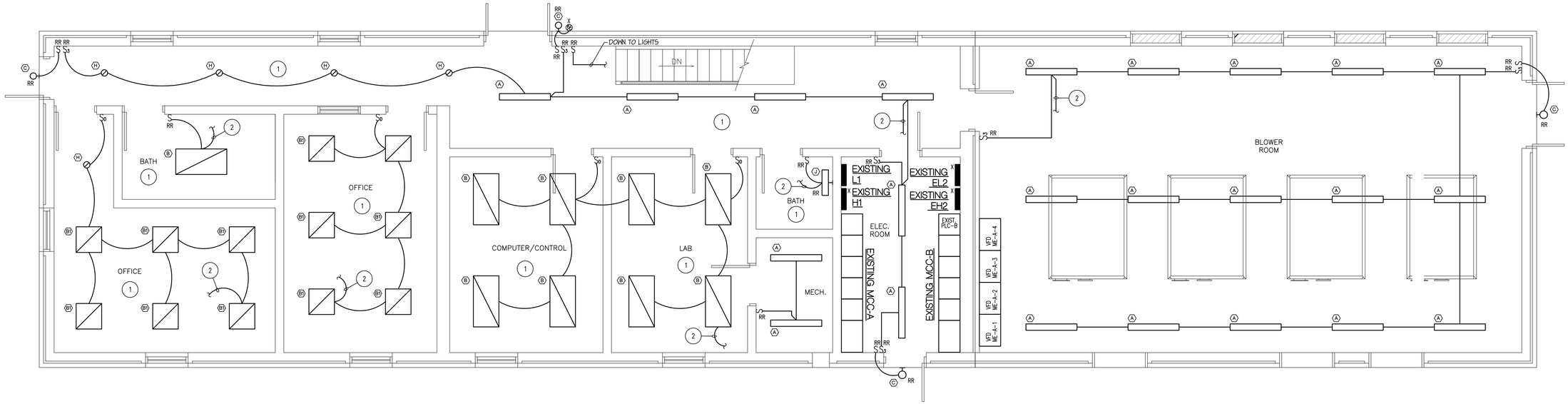

CONTROL BUILDING - UPPER LEVEL REMODEL - LIGHTING

SCALE: 1/4"= 1'-0"

4 0 4
SCALE FEET

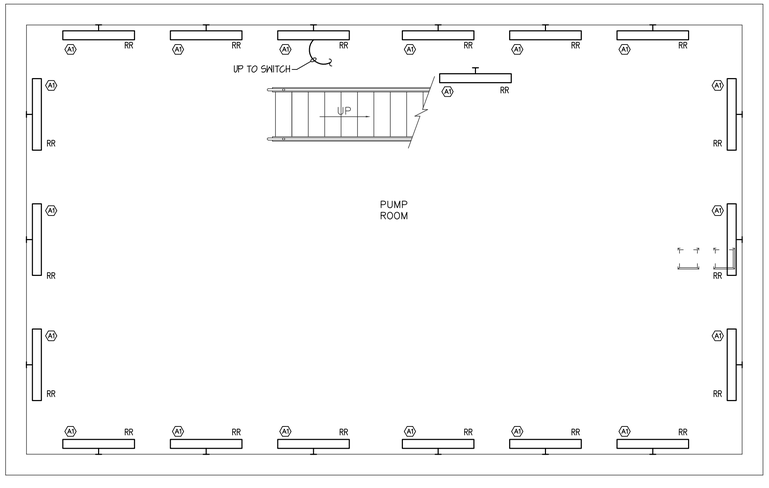

CONTROL BUILDING - LOWER LEVEL REMODEL - LIGHTING

SCALE: 1/4"= 1'-0"

4 0 4
SCALE FEET

GENERAL NOTES

A. FOR BID PREPARATION, ELECTRICAL CONTRACTOR SHALL LOOK AT ALL DRAWINGS, AS PERTINENT INFORMATION IS NOT CONFINED TO THE 7.00 DRAWING SERIES.

B. ELECTRICAL CONTRACTOR SHALL COORDINATE WITH INSTRUMENTATION AND MECHANICAL CONTRACTORS AND SHALL BE RESPONSIBLE FOR ALL CONTROL WIRING. SEE SPECIFICATIONS, DIVISION 15 AND 16.

C. DUE TO THE SCALING OF DRAWINGS, IT IS NOT POSSIBLE TO SHOW EQUIPMENT LOCATIONS WITH PINPOINT ACCURACY. EQUIPMENT LOCATIONS ARE SUBJECT TO ENGINEER'S APPROVAL.

D. HANDHOLES MAY BE INSTALLED AT SUITABLE LOCATIONS AT CONTRACTOR'S OPTION. COORDINATE WITH GENERAL CONTRACTORS.

E. COORDINATE WITH GENERAL AND MECHANICAL CONTRACTORS. HVAC EQUIPMENT, CONTROL WIRING, AND THERMOSTAT INSTALLATION SHOWN ON SHEETS ELSEWHERE. SEE ALSO SPECIFICATIONS DIVISION 15.

F. SEE SPECIFICATIONS FOR ADDITIONAL DETAILS.

G. DIRECT ALL QUESTIONS TO: BOLTON & MENK, INC. (507-625-4171)

H. ELECTRICAL CONTRACTOR SHALL REMOVE ALL CONTROL WIRING BACK TO SOURCE AFTER NEW CONTROLS ARE IN SERVICE. NO ABANDONED WIRE SHALL REMAIN. SEAL ALL ABANDONED CONDUIT AT FLOOR.

I. CONTRACTOR SHALL COMPLETE ALL WORK SO THAT PLANT REMAINS IN OPERATION. SEE DIVISION 1 FOR ADDITIONAL REQUIREMENTS. COMPLETE ALL WORK REQUIRING PLANT OPERATIONS STAFF DURING NORMAL WORK HOURS MONDAY THROUGH FRIDAY UNLESS SCHEDULED WITH OWNER.

PLAN NOTES

1. LIGHTING IN THIS ROOM TO BE CONTROLLED BY OCCUPANCY SENSOR(S) W/ SWITCH OVERRIDE. SUPPLIER AND/OR MANUFACTURE TO DETERMINE MOUNTING LOCATIONS & QUANTITIES.

2. RECONNECT TO EXISTING CIRCUIT MADE AVAILABLE VIA DEMOLITION.

SCALES SHOWN ON DRAWINGS ARE FOR 24"x36" SIZE SHEETS ONLY. DRAWINGS PLOTTED ON ANY OTHER SIZE SHEETS NEED TO HAVE SCALES ADJUSTED ACCORDINGLY

© Bolton & Menk, Inc. 2017, All Rights Reserved

0 1 2 3 4 6 8 12
Graphic Scale for 1/4"=1'-0"

Dolejs Associates, Inc.
Consulting Engineers
1624 N. Riverfront Dr. Mankato, Minnesota 507-625-7869
17792 Idawood Path Lakeville, Minnesota 952-435-6790

I HEREBY CERTIFY THAT THIS PLAN, SPECIFICATION OR REPORT WAS PREPARED BY ME OR UNDER MY DIRECT SUPERVISION, AND THAT I AM A DULY LICENSED PROFESSIONAL ENGINEER UNDER THE LAWS OF THE STATE OF MINNESOTA

SIGNATURE: TYPED OR PRINTED NAME: Christopher J. Dolejs
DATE 12-04-2017 LIC. NO. 24771

BOLTON & MENK
www.bolton-menk.com

REV.	BY	DATE
A	CJD	12/04/2017

CITY OF WINDOM, MINNESOTA
2017 WASTEWATER TREATMENT FACILITY IMPROVEMENTS
CONTROL BUILDING – REMODEL PLANS – LIGHTING

SHEET 7.10

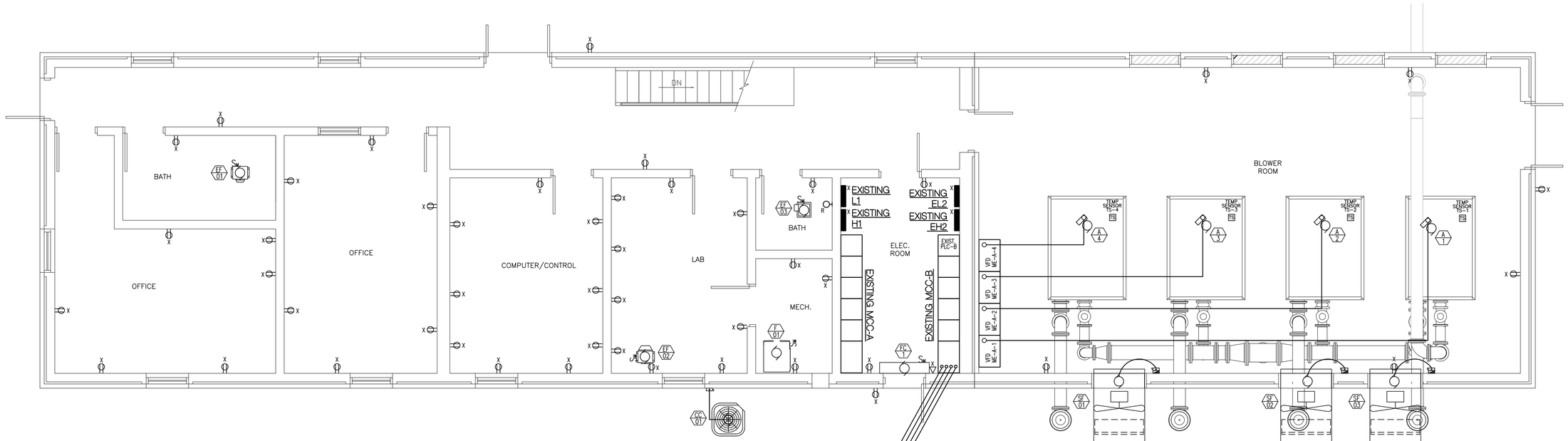

CONTROL BUILDING - UPPER LEVEL REMODEL - POWER

SCALE: 1/4"= 1'-0"

4 0 4
SCALE FEET

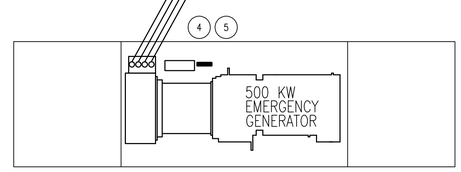

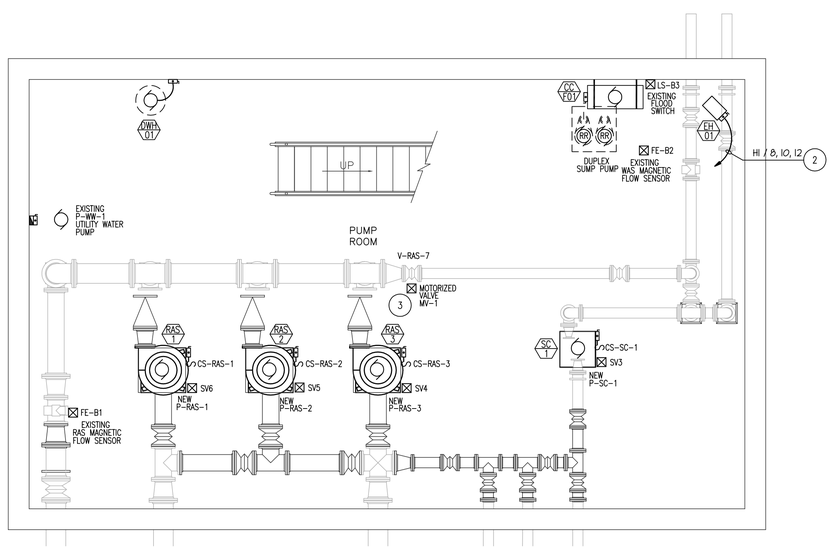

CONTROL BUILDING - LOWER LEVEL REMODEL - POWER

SCALE: 1/4"= 1'-0"

4 0 4
SCALE FEET

GENERAL NOTES

A. FOR BID PREPARATION, ELECTRICAL CONTRACTOR SHALL LOOK AT ALL DRAWINGS, AS PERTINENT INFORMATION IS NOT CONFINED TO THE 7.00 DRAWING SERIES.

B. ELECTRICAL CONTRACTOR SHALL COORDINATE WITH INSTRUMENTATION AND MECHANICAL CONTRACTORS AND SHALL BE RESPONSIBLE FOR ALL CONTROL WIRING. SEE SPECIFICATIONS, DIVISION 15 AND 16.

C. DUE TO THE SCALING OF DRAWINGS, IT IS NOT POSSIBLE TO SHOW EQUIPMENT LOCATIONS WITH PINPOINT ACCURACY. EQUIPMENT LOCATIONS ARE SUBJECT TO ENGINEER'S APPROVAL.

D. HANDHOLES MAY BE INSTALLED AT SUITABLE LOCATIONS AT CONTRACTOR'S OPTION. COORDINATE WITH GENERAL CONTRACTORS.

E. COORDINATE WITH GENERAL AND MECHANICAL CONTRACTORS. HVAC EQUIPMENT, CONTROL WIRING, AND THERMOSTAT INSTALLATION SHOWN ON SHEETS ELSEWHERE. SEE ALSO SPECIFICATIONS DIVISION 15.

F. SEE SPECIFICATIONS FOR ADDITIONAL DETAILS.

G. DIRECT ALL QUESTIONS TO: BOLTON & MENK, INC. (507-625-4171)

H. ELECTRICAL CONTRACTOR SHALL REMOVE ALL CONTROL WIRING BACK TO SOURCE AFTER NEW CONTROLS ARE IN SERVICE. NO ABANDONED WIRE SHALL REMAIN. SEAL ALL ABANDONED CONDUIT AT FLOOR.

I. CONTRACTOR SHALL COMPLETE ALL WORK SO THAT PLANT REMAINS IN OPERATION. SEE DIVISION 1 FOR ADDITIONAL REQUIREMENTS. COMPLETE ALL WORK REQUIRING PLANT OPERATIONS STAFF DURING NORMAL WORK HOURS MONDAY THROUGH FRIDAY UNLESS SCHEDULED WITH OWNER.

PLAN NOTES

1. LIGHTING IN THIS ROOM TO BE CONTROLLED BY OCCUPANCY SENSOR(S) W/ SWITCH OVERRIDE. SUPPLIER AND/OR MANUFACTURE TO DETERMINE MOUNTING LOCATIONS & QUANTITIES.
2. RECONNECT TO EXISTING CIRCUIT MADE AVAILABLE VIA DEMOLITION.
3. NEW MOTORIZED VALVE. PROVIDE 3/4", 2-#14 FOR VALVE POWER AND 4-#14 FOR OPEN/CLOSE POSITION.
4. NEW 600 KW GENERATOR.
5. ELECTRICAL CONTRACTOR TO PROVIDE A 246"X108"X16" CONCRETE SLAB WITH #5 AT 12 INCHES ON CENTER EACH WAY TOP AND BOTTOM BASED ON MTU-ONSITE GENERATOR. THE CONCRETE SLAB DESIGN AND DIMENSIONS ARE BASED ON MTU-ONSITE GENERATOR. IF THE CONTRACTOR PROPOSES A DIFFERENT GENERATOR SUPPLIER, THE CONCRETE SLAB DESIGN SHALL BE MODIFIED TO HAVE 12 INCHES OF OVERHANG ON FOUR SIDES AT NO ADDITIONAL COST TO OWNER.Z

SCALES SHOWN ON DRAWINGS ARE FOR 24"x36" SIZE SHEETS ONLY. DRAWINGS PLOTTED ON ANY OTHER SIZE SHEETS NEED TO HAVE SCALES ADJUSTED ACCORDINGLY

© Bolton & Menk, Inc. 2017, All Rights Reserved

0 1 2 3 4 6 8 12
Graph Scale for 1/4"=1'-0"

Dolejs Associates, Inc.
Consulting Engineers
1624 N. Riverfront Dr. Mankato, Minnesota 507-625-7869
17792 Idawood Path Lakeville, Minnesota 952-435-6790

I HEREBY CERTIFY THAT THIS PLAN, SPECIFICATION OR REPORT WAS PREPARED BY ME OR UNDER MY DIRECT SUPERVISION, AND THAT I AM A DULY LICENSED PROFESSIONAL ENGINEER UNDER THE LAWS OF THE STATE OF MINNESOTA.

SIGNATURE: TYPED OR PRINTED NAME: Christopher J. Dolejs
DATE 12-04-2017 LIC. NO. 24771

BOLTON & MENK
www.bolton-menk.com

REV.	BY	DATE
A	CJD	12/04/2017

CITY OF WINDOM, MINNESOTA
2017 WASTEWATER TREATMENT FACILITY IMPROVEMENTS
CONTROL BUILDING – REMODEL PLANS – POWER

SHEET 7.11

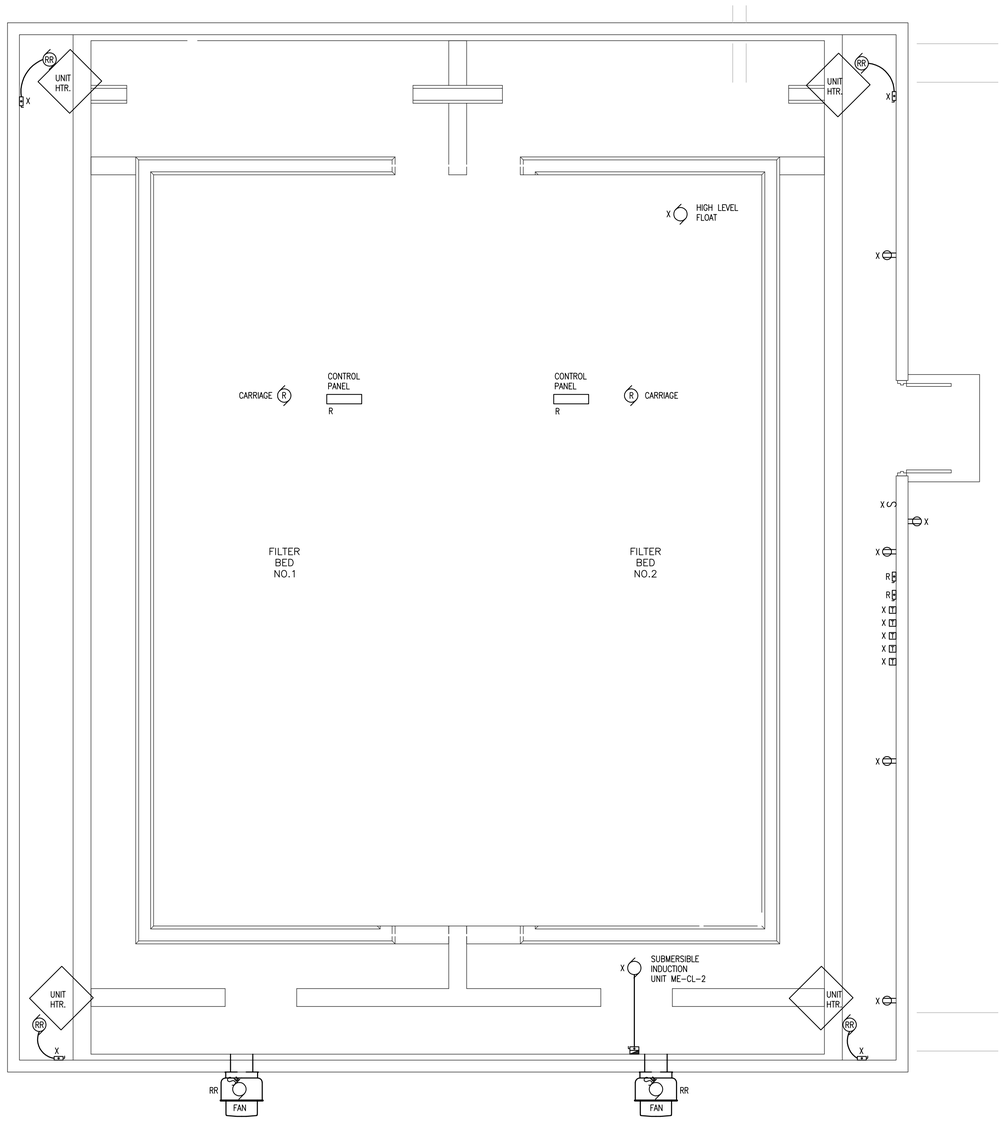

N

FILTER BUILDING DEMOLITION PLAN - POWER

SCALE: 1/4"= 1'-0"

4 0 4
SCALE FEET

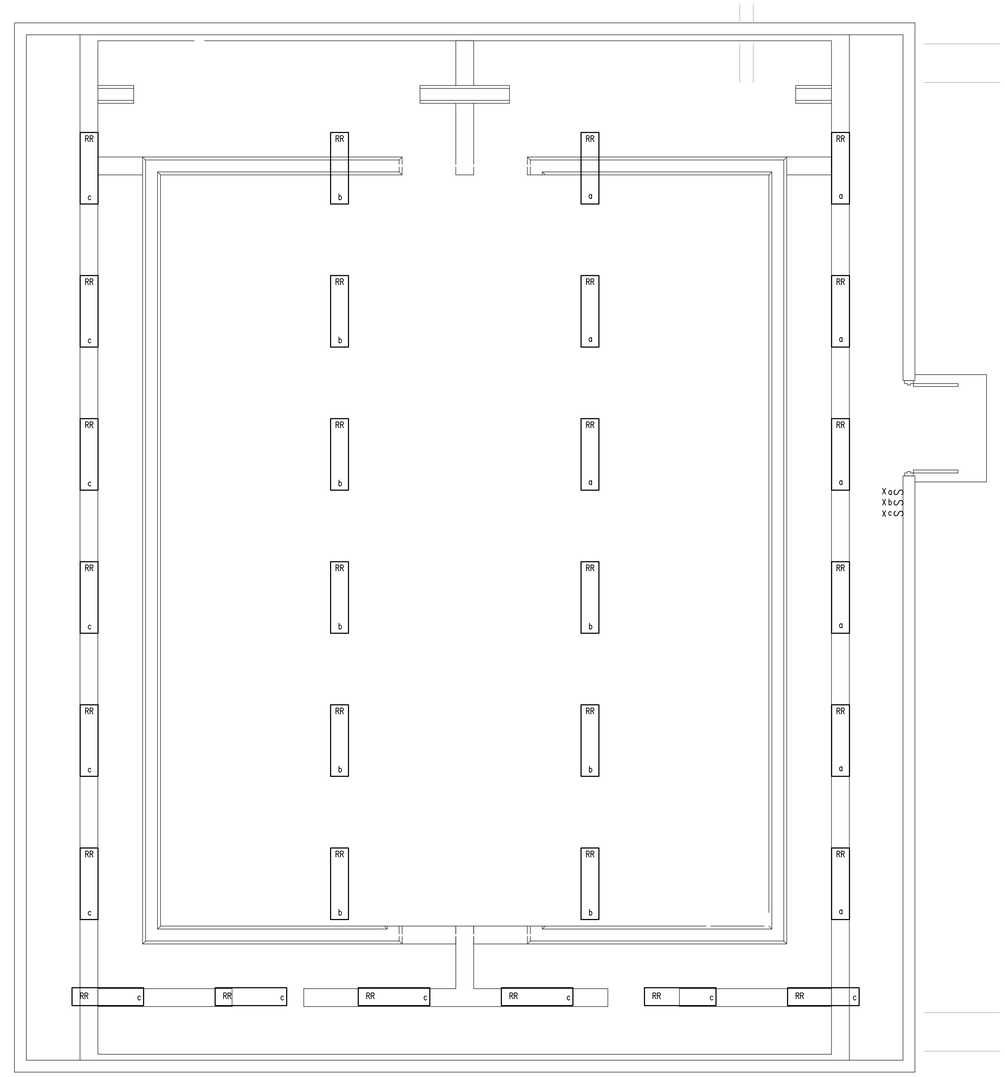

N

FILTER BUILDING DEMOLITION PLAN - LIGHTING

SCALE: 1/4"= 1'-0"

4 0 4
SCALE FEET

GENERAL NOTES

A. FOR BID PREPARATION, ELECTRICAL CONTRACTOR SHALL LOOK AT ALL DRAWINGS, AS PERTINENT INFORMATION IS NOT CONFINED TO THE 7.00 DRAWING SERIES.

B. ELECTRICAL CONTRACTOR SHALL COORDINATE WITH INSTRUMENTATION AND MECHANICAL CONTRACTORS AND SHALL BE RESPONSIBLE FOR ALL CONTROL WIRING. SEE SPECIFICATIONS, DIVISION 15 AND 16.

C. DUE TO THE SCALING OF DRAWINGS, IT IS NOT POSSIBLE TO SHOW EQUIPMENT LOCATIONS WITH PINPOINT ACCURACY. EQUIPMENT LOCATIONS ARE SUBJECT TO ENGINEER'S APPROVAL.

D. COORDINATE WITH GENERAL AND MECHANICAL CONTRACTORS. HVAC EQUIPMENT, CONTROL WIRING, AND THERMOSTAT INSTALLATION SHOWN ON SHEETS ELSEWHERE. SEE ALSO SPECIFICATIONS DIVISION 15.

E. SEE SPECIFICATIONS FOR ADDITIONAL DETAILS.

F. DIRECT ALL QUESTIONS TO: BOLTON & MENK, INC. (507-625-4171)

G. ELECTRICAL CONTRACTOR SHALL REMOVE ALL CONTROL WIRING BACK TO SOURCE AFTER NEW CONTROLS ARE IN SERVICE. NO ABANDONED WIRE SHALL REMAIN. SEAL ALL ABANDONED CONDUIT AT FLOOR.

H. CONTRACTOR SHALL COMPLETE ALL WORK SO THAT PLANT REMAINS IN OPERATION. SEE DIVISION 1 FOR ADDITIONAL REQUIREMENTS. COMPLETE ALL WORK REQUIRING PLANT OPERATIONS STAFF DURING NORMAL WORK HOURS MONDAY THROUGH FRIDAY UNLESS SCHEDULED WITH OWNER.

SCALES SHOWN ON DRAWINGS ARE FOR 24"x36" SIZE SHEETS ONLY. DRAWINGS PLOTTED ON ANY OTHER SIZE SHEETS NEED TO HAVE SCALES ADJUSTED ACCORDINGLY

© Bolton & Menk, Inc. 2017, All Rights Reserved

0 1 2 3 4 6 8 12
Graphic Scale for 1/4"=1'-0"

Dolejs Associates, Inc.
Consulting Engineers
1624 N. Riverfront Dr. Mankato, Minnesota 507-625-7869
17792 Idawood Path Lakeville, Minnesota 952-435-6790

I HEREBY CERTIFY THAT THIS PLAN, SPECIFICATION OR REPORT WAS PREPARED BY ME OR UNDER MY DIRECT SUPERVISION, AND THAT I AM A DULY LICENSED PROFESSIONAL ENGINEER UNDER THE LAWS OF THE STATE OF MINNESOTA

SIGNATURE: TYPED OR PRINTED NAME: Christopher J. Dolejs
DATE 12-04-2017 LIC. NO. 24771

BOLTON & MENK
www.bolton-menk.com

REV.	BY	DATE
A	CJD	12/04/2017

CITY OF WINDOM, MINNESOTA
2017 WASTEWATER TREATMENT FACILITY IMPROVEMENTS
FILTER BUILDING – DEMOLITION PLANS – ELECTRICAL

SHEET 7.12

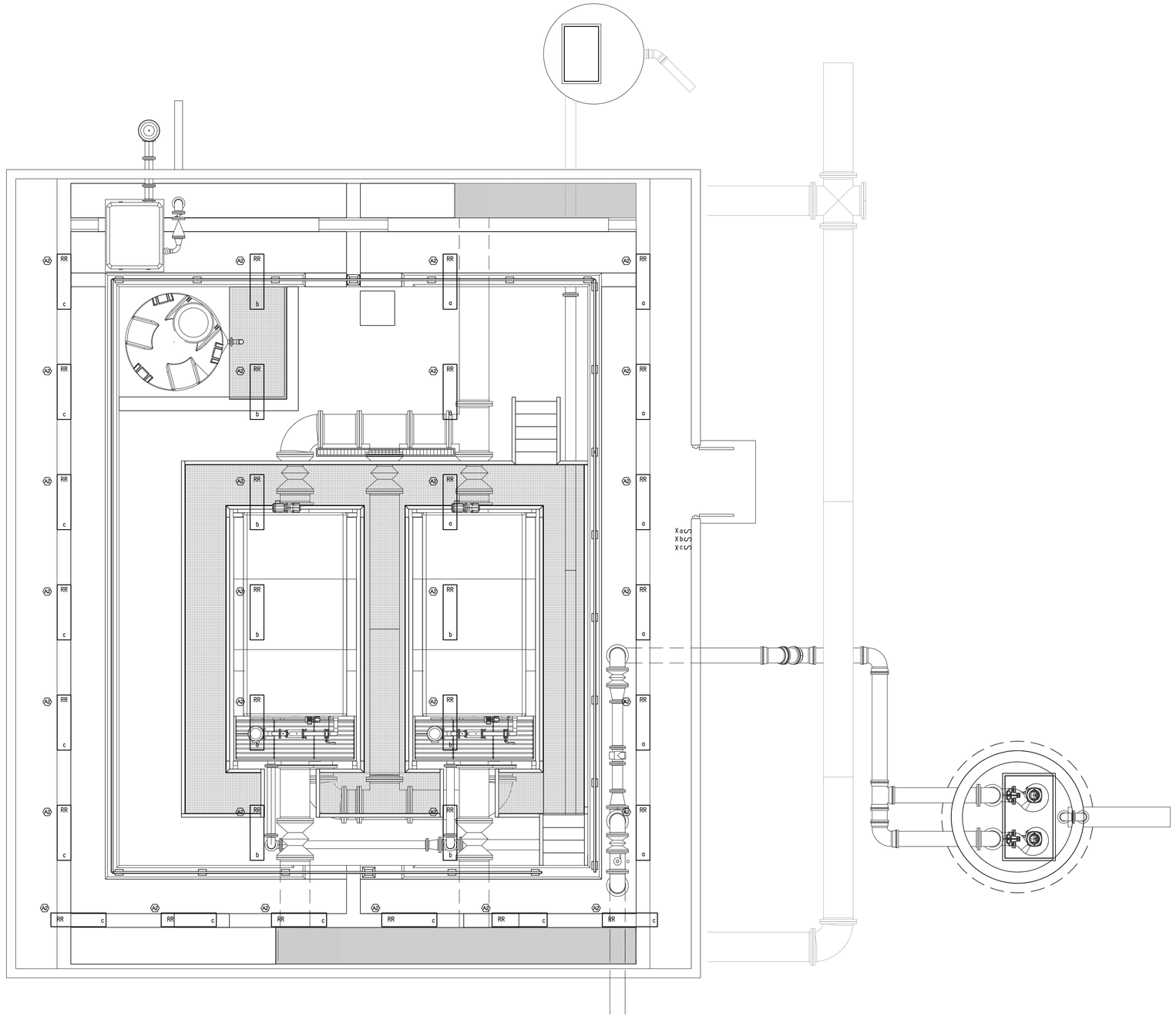

N

FILTER BUILDING REMODEL PLAN - LIGHTING

SCALE: 1/4"= 1'-0"

4 0 4
SCALE FEET

GENERAL NOTES

A. FOR BID PREPARATION, ELECTRICAL CONTRACTOR SHALL LOOK AT ALL DRAWINGS, AS PERTINENT INFORMATION IS NOT CONFINED TO THE 7.00 DRAWING SERIES.

B. ELECTRICAL CONTRACTOR SHALL COORDINATE WITH INSTRUMENTATION AND MECHANICAL CONTRACTORS AND SHALL BE RESPONSIBLE FOR ALL CONTROL WIRING. SEE SPECIFICATIONS, DIVISION 15 AND 16.

C. DUE TO THE SCALING OF DRAWINGS, IT IS NOT POSSIBLE TO SHOW EQUIPMENT LOCATIONS WITH PINPOINT ACCURACY. EQUIPMENT LOCATIONS ARE SUBJECT TO ENGINEER'S APPROVAL.

D. COORDINATE WITH GENERAL AND MECHANICAL CONTRACTORS. HVAC EQUIPMENT, CONTROL WIRING, AND THERMOSTAT INSTALLATION SHOWN ON SHEETS ELSEWHERE. SEE ALSO SPECIFICATIONS DIVISION 15.

E. SEE SPECIFICATIONS FOR ADDITIONAL DETAILS.

F. DIRECT ALL QUESTIONS TO: BOLTON & MENK, INC. (507-625-4171)

G. ELECTRICAL CONTRACTOR SHALL REMOVE ALL CONTROL WIRING BACK TO SOURCE AFTER NEW CONTROLS ARE IN SERVICE. NO ABANDONED WIRE SHALL REMAIN. SEAL ALL ABANDONED CONDUIT AT FLOOR.

H. CONTRACTOR SHALL COMPLETE ALL WORK SO THAT PLANT REMAINS IN OPERATION. SEE DIVISION 1 FOR ADDITIONAL REQUIREMENTS. COMPLETE ALL WORK REQUIRING PLANT OPERATIONS STAFF DURING NORMAL WORK HOURS MONDAY THROUGH FRIDAY UNLESS SCHEDULED WITH OWNER.

SCALES SHOWN ON DRAWINGS ARE FOR 24"x36" SIZE SHEETS ONLY. DRAWINGS PLOTTED ON ANY OTHER SIZE SHEETS NEED TO HAVE SCALES ADJUSTED ACCORDINGLY

© Bolton & Menk, Inc. 2017, All Rights Reserved

0 1 2 3 4 6 8 12
Graphic Scale for 1/4"=1'-0"

Dolejs Associates, Inc.
Consulting Engineers
1624 N. Riverfront Dr. Mankato, Minnesota 507-625-7869
17792 Idlewood Path Lakeville, Minnesota 952-435-6790

I HEREBY CERTIFY THAT THIS PLAN, SPECIFICATION OR REPORT WAS PREPARED BY ME OR UNDER MY DIRECT SUPERVISION, AND THAT I AM A DULY LICENSED PROFESSIONAL ENGINEER UNDER THE LAWS OF THE STATE OF MINNESOTA

SIGNATURE: TYPED OR PRINTED NAME: Christopher J. Dolejs
DATE 12-04-2017 LIC. NO. 24771

BOLTON & MENK
www.bolton-menk.com

REV.	BY	DATE
A	CJD	12/04/2017

CITY OF WINDOM, MINNESOTA
2017 WASTEWATER TREATMENT FACILITY IMPROVEMENTS
FILTER BUILDING – REMODEL PLAN – LIGHTING

SHEET 7.13

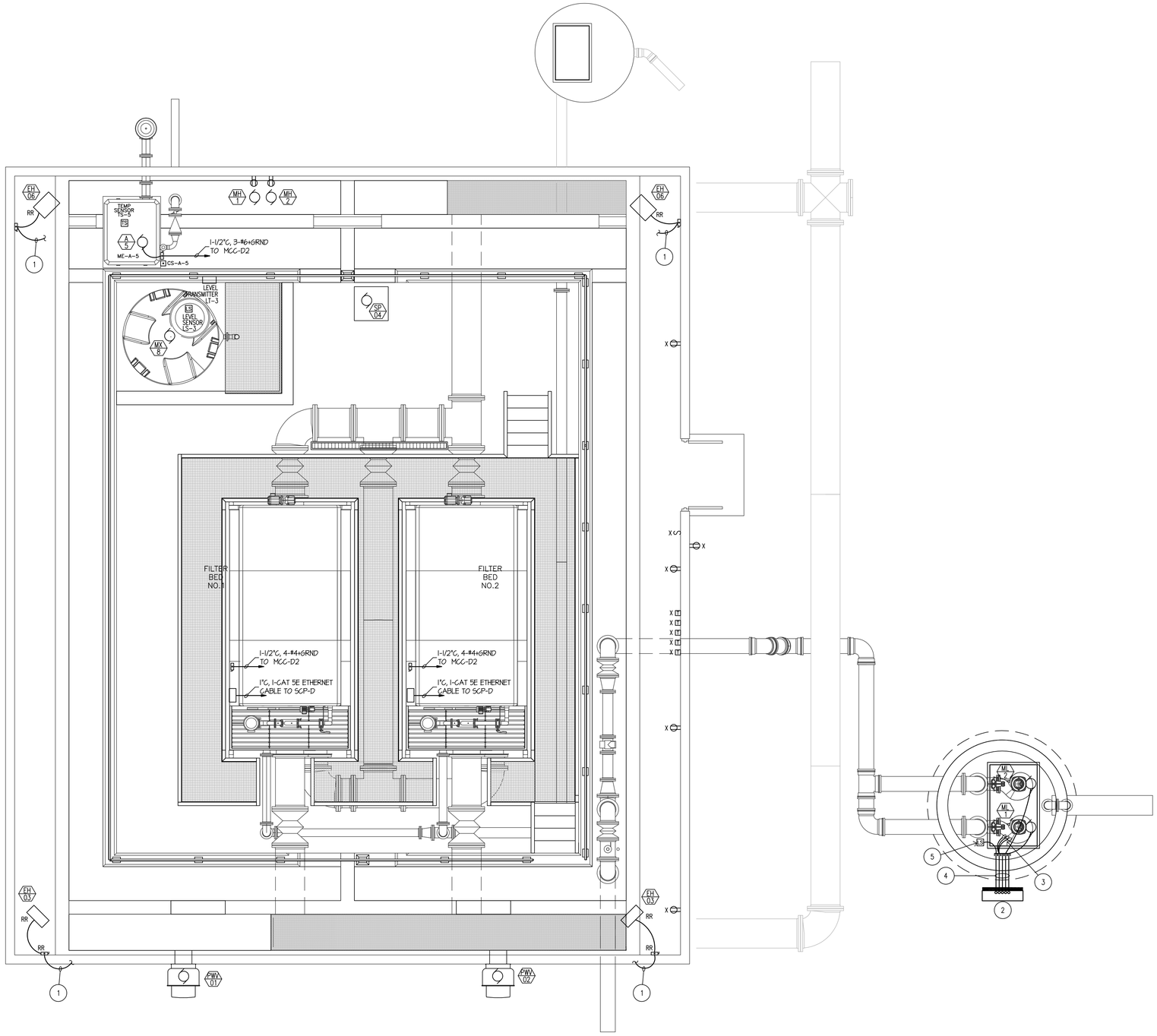

N

FILTER BUILDING REMODEL PLAN - POWER

SCALE: 1/4"= 1'-0"

4 0 4
SCALE FEET

GENERAL NOTES

A. FOR BID PREPARATION, ELECTRICAL CONTRACTOR SHALL LOOK AT ALL DRAWINGS, AS PERTINENT INFORMATION IS NOT CONFINED TO THE 7.00 DRAWING SERIES.

B. ELECTRICAL CONTRACTOR SHALL COORDINATE WITH INSTRUMENTATION AND MECHANICAL CONTRACTORS AND SHALL BE RESPONSIBLE FOR ALL CONTROL WIRING. SEE SPECIFICATIONS, DIVISION 15 AND 16.

C. DUE TO THE SCALING OF DRAWINGS, IT IS NOT POSSIBLE TO SHOW EQUIPMENT LOCATIONS WITH PINPOINT ACCURACY. EQUIPMENT LOCATIONS ARE SUBJECT TO ENGINEER'S APPROVAL.

D. HANDHOLES MAY BE INSTALLED AT SUITABLE LOCATIONS AT CONTRACTOR'S OPTION. COORDINATE WITH GENERAL CONTRACTORS.

E. COORDINATE WITH GENERAL AND MECHANICAL CONTRACTORS. HVAC EQUIPMENT, CONTROL WIRING, AND THERMOSTAT INSTALLATION SHOWN ON SHEETS ELSEWHERE. SEE ALSO SPECIFICATIONS DIVISION 15.

F. SEE SPECIFICATIONS FOR ADDITIONAL DETAILS.

G. DIRECT ALL QUESTIONS TO: BOLTON & MENK, INC. (507-625-4171)

H. ELECTRICAL CONTRACTOR SHALL REMOVE ALL CONTROL WIRING BACK TO SOURCE AFTER NEW CONTROLS ARE IN SERVICE. NO ABANDONED WIRE SHALL REMAIN. SEAL ALL ABANDONED CONDUIT AT FLOOR.

I. CONTRACTOR SHALL COMPLETE ALL WORK SO THAT PLANT REMAINS IN OPERATION. SEE DIVISION 1 FOR ADDITIONAL REQUIREMENTS. COMPLETE ALL WORK REQUIRING PLANT OPERATIONS STAFF DURING NORMAL WORK HOURS MONDAY THROUGH FRIDAY UNLESS SCHEDULED WITH OWNER.

PLAN NOTES

1. RECONNECT TO EXISTING CIRCUIT MADE AVAILABLE VIA DEMOLITION/RELOCATION.
2. NEW CONTROL PANEL AND REMOTE TELEMETRY UNIT.
3. FURNISH AND INSTALL TWO NEW FLOAT SWITCHES. PROVIDE A 2"C, 6-#14 CU COND.
4. CONTRACTOR TO VERIFY PROPER CONDUIT SIZE WITH PUMP SUPPLIER TO ENSURE EASY REMOVAL OF SUBMERSIBLE PUMP CABLES. PROVIDE 2 1/2"C FROM STRUCTURE TO PANEL.
5. SUBMERSIBLE PRESSURE TRANSDUCER. PROVIDE 2-TWP TO CONTROL CABINET.

SCALES SHOWN ON DRAWINGS ARE FOR 24"x36" SIZE SHEETS ONLY. DRAWINGS PLOTTED ON ANY OTHER SIZE SHEETS NEED TO HAVE SCALES ADJUSTED ACCORDINGLY

© Bolton & Menk, Inc. 2017, All Rights Reserved

0 1 2 3 4 6 8 12
Graph Scale for 1/4"=1'-0"

Dolejs Associates, Inc.
Consulting Engineers
1624 N. Riverfront Dr. Mankato, Minnesota 507-625-7869
17792 Idawood Path Lakeville, Minnesota 952-435-6790

I HEREBY CERTIFY THAT THIS PLAN, SPECIFICATION OR REPORT WAS PREPARED BY ME OR UNDER MY DIRECT SUPERVISION, AND THAT I AM A DULY LICENSED PROFESSIONAL ENGINEER UNDER THE LAWS OF THE STATE OF MINNESOTA

SIGNATURE: Christopher J. Dolejs TYPED OR PRINTED NAME: Christopher J. Dolejs
DATE 12-04-2017 LIC. NO. 24771

BOLTON & MENK
www.bolton-menk.com

REV.	BY	DATE
A	CJD	12/04/2017

CITY OF WINDOM, MINNESOTA
2017 WASTEWATER TREATMENT FACILITY IMPROVEMENTS
FILTER BUILDING – REMODEL PLAN – POWER

SHEET 7.14

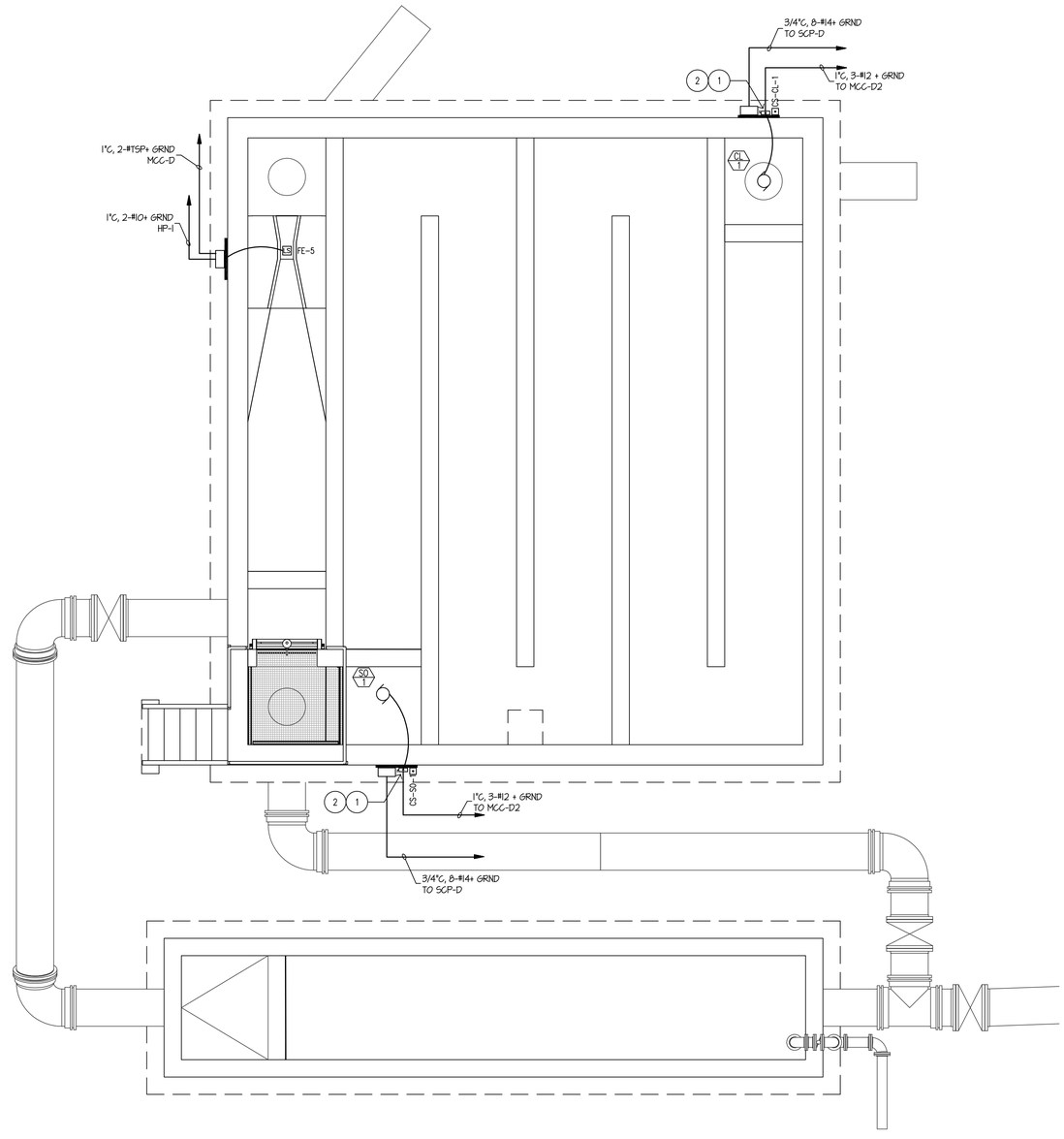

N

CHLORINE CONTACT BASIN PLAN - ELECTRICAL

SCALE: 1/4 = 1'-0"

4 0 4
SCALE FEET

GENERAL NOTES

A. FOR BID PREPARATION, ELECTRICAL CONTRACTOR SHALL LOOK AT ALL DRAWINGS, AS PERTINENT INFORMATION IS NOT CONFINED TO THE 7.00 DRAWING SERIES.

B. ELECTRICAL CONTRACTOR SHALL COORDINATE WITH INSTRUMENTATION AND MECHANICAL CONTRACTORS AND SHALL BE RESPONSIBLE FOR ALL CONTROL WIRING. SEE SPECIFICATIONS, DIVISION 15 AND 16.

C. DUE TO THE SCALING OF DRAWINGS, IT IS NOT POSSIBLE TO SHOW EQUIPMENT LOCATIONS WITH PINPOINT ACCURACY. EQUIPMENT LOCATIONS ARE SUBJECT TO ENGINEER'S APPROVAL.

D. HANDHOLES MAY BE INSTALLED AT SUITABLE LOCATIONS AT CONTRACTOR'S OPTION. COORDINATE WITH GENERAL CONTRACTORS.

E. COORDINATE WITH GENERAL AND MECHANICAL CONTRACTORS. HVAC EQUIPMENT, CONTROL WIRING, AND THERMOSTAT INSTALLATION SHOWN ON SHEETS ELSEWHERE. SEE ALSO SPECIFICATIONS DIVISION 15.

F. SEE SPECIFICATIONS FOR ADDITIONAL DETAILS.

G. DIRECT ALL QUESTIONS TO: BOLTON & MENK, INC. (507-625-4171)

H. ELECTRICAL CONTRACTOR SHALL REMOVE ALL CONTROL WIRING BACK TO SOURCE AFTER NEW CONTROLS ARE IN SERVICE. NO ABANDONED WIRE SHALL REMAIN. SEAL ALL ABANDONED CONDUIT AT FLOOR.

I. CONTRACTOR SHALL COMPLETE ALL WORK SO THAT PLANT REMAINS IN OPERATION. SEE DIVISION 1 FOR ADDITIONAL REQUIREMENTS. COMPLETE ALL WORK REQUIRING PLANT OPERATIONS STAFF DURING NORMAL WORK HOURS MONDAY THROUGH FRIDAY UNLESS SCHEDULED WITH OWNER.

◯ PLAN NOTES

1. XXX

SCALES SHOWN ON DRAWINGS ARE FOR 24"x36" SIZE SHEETS ONLY. DRAWINGS PLOTTED ON ANY OTHER SIZE SHEETS NEED TO HAVE SCALES ADJUSTED ACCORDINGLY

© Bolton & Menk, Inc. 2017, All Rights Reserved

0 1 2 3 4 6 8 12
Graphic Scale for 1/4"=1'-0"

Dolejs Associates, Inc.
Consulting Engineers
1624 N. Riverfront Dr.
Mankato, Minnesota
507-625-7869
17792 Idawood Path
Lakeville, Minnesota
952-435-6790

I HEREBY CERTIFY THAT THIS PLAN, SPECIFICATION OR REPORT WAS PREPARED BY ME OR UNDER MY DIRECT SUPERVISION, AND THAT I AM A DULY LICENSED PROFESSIONAL ENGINEER UNDER THE LAWS OF THE STATE OF MINNESOTA

SIGNATURE: TYPED OR PRINTED NAME: Christopher J. Dolejs
DATE 12-04-2017 LIC. NO. 24771

BOLTON & MENK
www.bolton-menk.com

REV.	BY	DATE
A	CJD	12/04/2017

CITY OF WINDOM, MINNESOTA
2017 WASTEWATER TREATMENT FACILITY IMPROVEMENTS
CHLORINE CONTACT BASIN
ELECTRICAL

SHEET
7.15

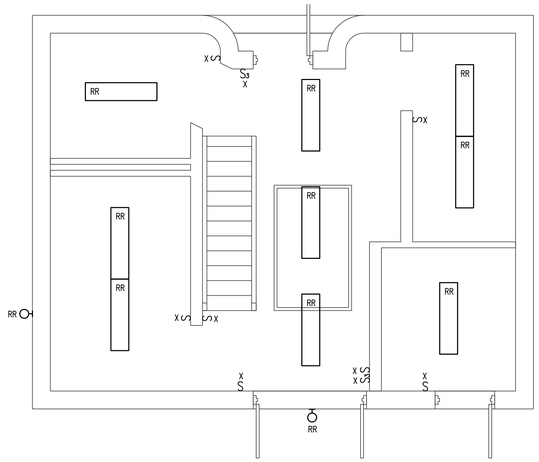

N

SLUDGE BUILDING - UPPER LEVEL DEMOLITION - LIGHTING

SCALE: 1/4"= 1'-0"

4 0 4
SCALE FEET

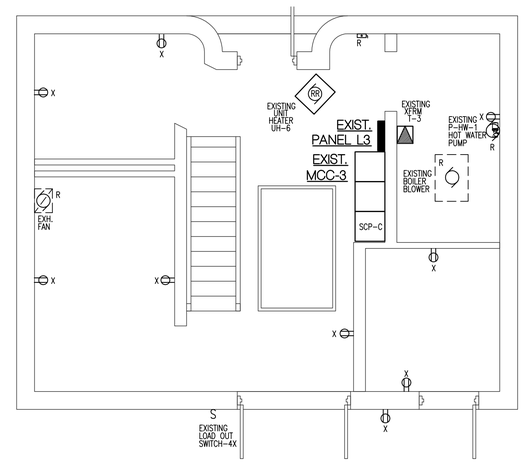

N

SLUDGE BUILDING - UPPER LEVEL DEMOLITION POWER

SCALE: 1/4"= 1'-0"

4 0 4
SCALE FEET

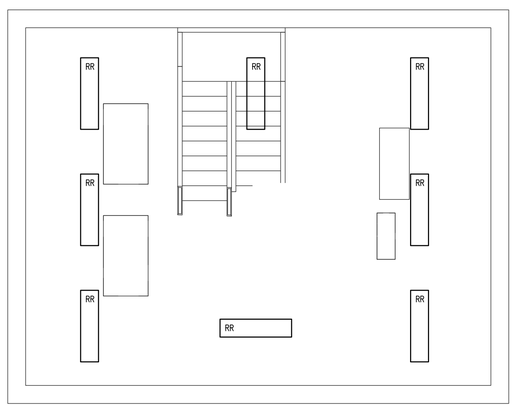

N

SLUDGE BUILDING - LOWER LEVEL DEMOLITION - LIGHTING

SCALE: 1/4"= 1'-0"

4 0 4
SCALE FEET

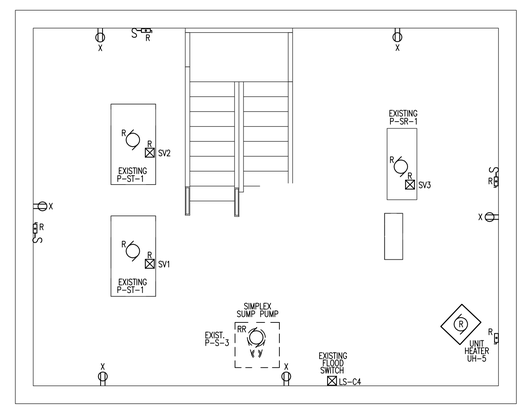

N

SLUDGE BUILDING - LOWER LEVEL DEMOLITION - POWER

SCALE: 1/4"= 1'-0"

4 0 4
SCALE FEET

GENERAL NOTES

A. FOR BID PREPARATION, ELECTRICAL CONTRACTOR SHALL LOOK AT ALL DRAWINGS, AS PERTINENT INFORMATION IS NOT CONFINED TO THE 7.00 DRAWING SERIES.

B. ELECTRICAL CONTRACTOR SHALL COORDINATE WITH INSTRUMENTATION AND MECHANICAL CONTRACTORS AND SHALL BE RESPONSIBLE FOR ALL CONTROL WIRING. SEE SPECIFICATIONS, DIVISION 15 AND 16.

C. DUE TO THE SCALING OF DRAWINGS, IT IS NOT POSSIBLE TO SHOW EQUIPMENT LOCATIONS WITH PINPOINT ACCURACY. EQUIPMENT LOCATIONS ARE SUBJECT TO ENGINEER'S APPROVAL.

D. COORDINATE WITH GENERAL AND MECHANICAL CONTRACTORS. HVAC EQUIPMENT, CONTROL WIRING, AND THERMOSTAT INSTALLATION SHOWN ON SHEETS ELSEWHERE. SEE ALSO SPECIFICATIONS DIVISION 15.

E. SEE SPECIFICATIONS FOR ADDITIONAL DETAILS.

F. DIRECT ALL QUESTIONS TO: BOLTON & MENK, INC. (507-625-4171)

G. ELECTRICAL CONTRACTOR SHALL REMOVE ALL CONTROL WIRING BACK TO SOURCE AFTER NEW CONTROLS ARE IN SERVICE. NO ABANDONED WIRE SHALL REMAIN. SEAL ALL ABANDONED CONDUIT AT FLOOR.

H. CONTRACTOR SHALL COMPLETE ALL WORK SO THAT PLANT REMAINS IN OPERATION. SEE DIVISION 1 FOR ADDITIONAL REQUIREMENTS. COMPLETE ALL WORK REQUIRING PLANT OPERATIONS STAFF DURING NORMAL WORK HOURS MONDAY THROUGH FRIDAY UNLESS SCHEDULED WITH OWNER.

SCALES SHOWN ON DRAWINGS ARE FOR 24"x36" SIZE SHEETS ONLY. DRAWINGS PLOTTED ON ANY OTHER SIZE SHEETS NEED TO HAVE SCALES ADJUSTED ACCORDINGLY

© Bolton & Menk, Inc. 2017, All Rights Reserved

0 1 2 3 4 6 8 12
Graphic Scale for 1/4"=1'-0"

Dolejs Associates, Inc.
Consulting Engineers
1624 N. Riverfront Dr. Mankato, Minnesota 507-625-7869
17792 Idawood Path Lakeville, Minnesota 952-435-6790

I HEREBY CERTIFY THAT THIS PLAN, SPECIFICATION OR REPORT WAS PREPARED BY ME OR UNDER MY DIRECT SUPERVISION, AND THAT I AM A DULY LICENSED PROFESSIONAL ENGINEER UNDER THE LAWS OF THE STATE OF MINNESOTA

SIGNATURE: TYPED OR PRINTED NAME: Christopher J. Dolejs
DATE 12-04-2017 LIC. NO. 24771

BOLTON & MENK
www.bolton-menk.com

REV.	BY	DATE
A	CJD	12/04/2017

CITY OF WINDOM, MINNESOTA
2017 WASTEWATER TREATMENT FACILITY IMPROVEMENTS
SLUDGE BUILDING – UPPER & LOWER DEMOLITION – LIGHTING & POWER PLANS

SHEET 7.16

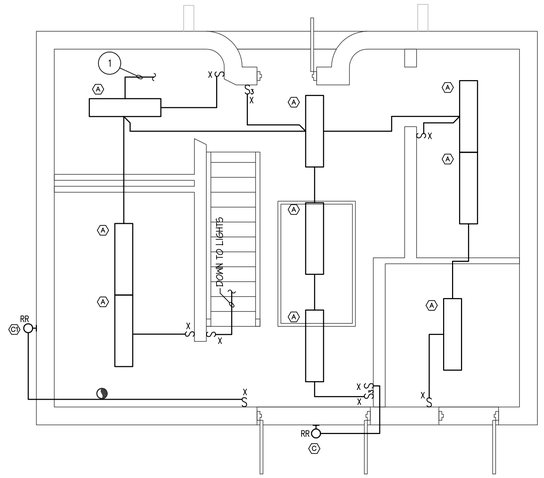

N

SLUDGE BUILDING - UPPER LEVEL REMODEL - LIGHTING

SCALE: 1/4"= 1'-0"

4 0 4
SCALE FEET

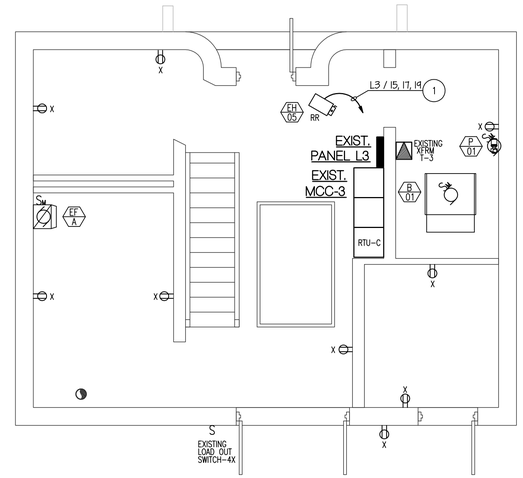

N

SLUDGE BUILDING - UPPER LEVEL REMODEL POWER

SCALE: 1/4"= 1'-0"

4 0 4
SCALE FEET

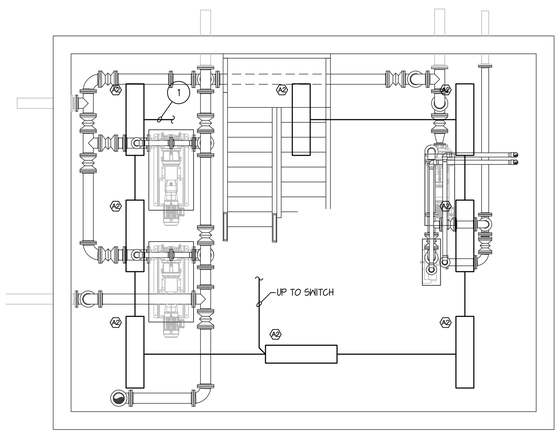

N

SLUDGE BUILDING - LOWER LEVEL REMODEL - LIGHTING

SCALE: 1/4"= 1'-0"

4 0 4
SCALE FEET

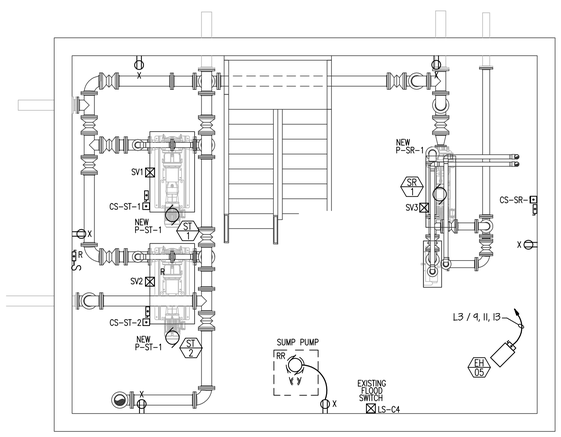

N

SLUDGE BUILDING - LOWER LEVEL REMODEL - POWER

SCALE: 1/4"= 1'-0"

4 0 4
SCALE FEET

GENERAL NOTES

A. FOR BID PREPARATION, ELECTRICAL CONTRACTOR SHALL LOOK AT ALL DRAWINGS, AS PERTINENT INFORMATION IS NOT CONFINED TO THE 7.00 DRAWING SERIES.

B. ELECTRICAL CONTRACTOR SHALL COORDINATE WITH INSTRUMENTATION AND MECHANICAL CONTRACTORS AND SHALL BE RESPONSIBLE FOR ALL CONTROL WIRING. SEE SPECIFICATIONS, DIVISION 15 AND 16.

C. DUE TO THE SCALING OF DRAWINGS, IT IS NOT POSSIBLE TO SHOW EQUIPMENT LOCATIONS WITH PINPOINT ACCURACY. EQUIPMENT LOCATIONS ARE SUBJECT TO ENGINEER'S APPROVAL.

D. HANDHOLES MAY BE INSTALLED AT SUITABLE LOCATIONS AT CONTRACTOR'S OPTION. COORDINATE WITH GENERAL CONTRACTORS.

E. COORDINATE WITH GENERAL AND MECHANICAL CONTRACTORS. HVAC EQUIPMENT, CONTROL WIRING, AND THERMOSTAT INSTALLATION SHOWN ON SHEETS ELSEWHERE. SEE ALSO SPECIFICATIONS DIVISION 15.

F. SEE SPECIFICATIONS FOR ADDITIONAL DETAILS.

G. DIRECT ALL QUESTIONS TO: BOLTON & MENK, INC. (507-625-4171)

H. ELECTRICAL CONTRACTOR SHALL REMOVE ALL CONTROL WIRING BACK TO SOURCE AFTER NEW CONTROLS ARE IN SERVICE. NO ABANDONED WIRE SHALL REMAIN. SEAL ALL ABANDONED CONDUIT AT FLOOR.

I. CONTRACTOR SHALL COMPLETE ALL WORK SO THAT PLANT REMAINS IN OPERATION. SEE DIVISION 1 FOR ADDITIONAL REQUIREMENTS. COMPLETE ALL WORK REQUIRING PLANT OPERATIONS STAFF DURING NORMAL WORK HOURS MONDAY THROUGH FRIDAY UNLESS SCHEDULED WITH OWNER.

PLAN NOTES

1. RECONNECT TO EXISTING CIRCUIT MADE AVAILABLE VIA DEMOLITION/RELOCATION.

SCALES SHOWN ON DRAWINGS ARE FOR 24"x36" SIZE SHEETS ONLY. DRAWINGS PLOTTED ON ANY OTHER SIZE SHEETS NEED TO HAVE SCALES ADJUSTED ACCORDINGLY

© Bolton & Menk, Inc. 2017, All Rights Reserved

0 1 2 3 4 6 8 12
Graphic Scale for 1/4"=1'-0"

Dolejs Associates, Inc.
Consulting Engineers
1624 N. Riverfront Dr. Mankato, Minnesota 507-625-7869
17792 Idawood Path Lakeville, Minnesota 952-435-6790

I HEREBY CERTIFY THAT THIS PLAN, SPECIFICATION OR REPORT WAS PREPARED BY ME OR UNDER MY DIRECT SUPERVISION, AND THAT I AM A DULY LICENSED PROFESSIONAL ENGINEER UNDER THE LAWS OF THE STATE OF MINNESOTA

SIGNATURE: TYPED OR PRINTED NAME: Christopher J. Dolejs
DATE 12-04-2017 LIC. NO. 24771

BOLTON & MENK
www.bolton-menk.com

REV.	BY	DATE
A	CJD	12/04/2017

CITY OF WINDOM, MINNESOTA
2017 WASTEWATER TREATMENT FACILITY IMPROVEMENTS
SLUDGE BUILDING – UPPER & LOWER REMODEL – LIGHTING & POWER PLANS

SHEET 7.17

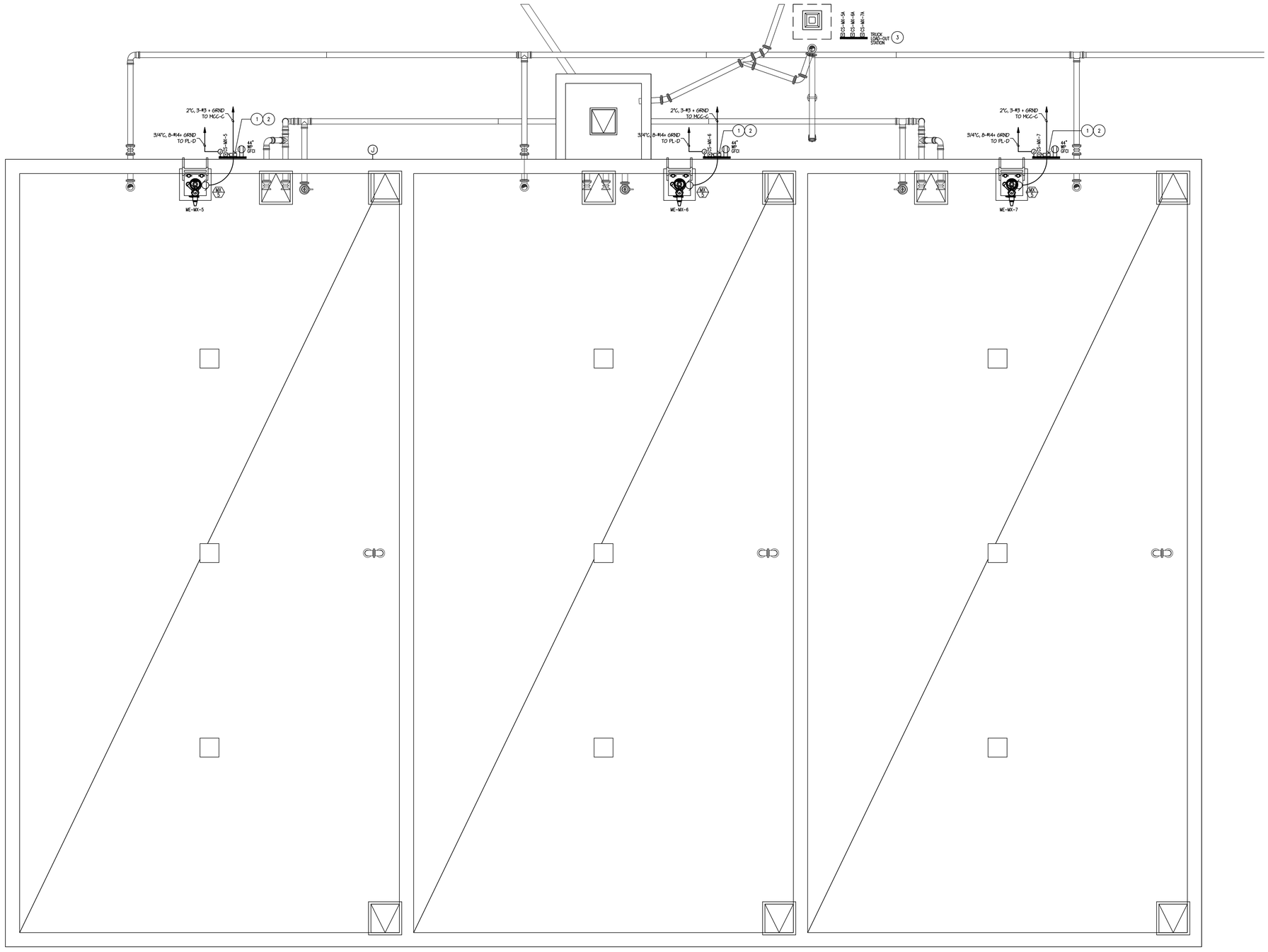

N

BIOSOLIDS STORAGE TANK - POWER PLAN

SCALE: 3/16"= 1'-0"

GENERAL NOTES

A. FOR BID PREPARATION, ELECTRICAL CONTRACTOR SHALL LOOK AT ALL DRAWINGS, AS PERTINENT INFORMATION IS NOT CONFINED TO THE 7.00 DRAWING SERIES.

B. ELECTRICAL CONTRACTOR SHALL COORDINATE WITH INSTRUMENTATION AND MECHANICAL CONTRACTORS AND SHALL BE RESPONSIBLE FOR ALL CONTROL WIRING. SEE SPECIFICATIONS, DIVISION 15 AND 16.

C. DUE TO THE SCALING OF DRAWINGS, IT IS NOT POSSIBLE TO SHOW EQUIPMENT LOCATIONS WITH PINPOINT ACCURACY. EQUIPMENT LOCATIONS ARE SUBJECT TO ENGINEER'S APPROVAL.

D. HANDHOLES MAY BE INSTALLED AT SUITABLE LOCATIONS AT CONTRACTOR'S OPTION. COORDINATE WITH GENERAL CONTRACTORS.

E. COORDINATE WITH GENERAL AND MECHANICAL CONTRACTORS. HVAC EQUIPMENT, CONTROL WIRING, AND THERMOSTAT INSTALLATION SHOWN ON SHEETS ELSEWHERE. SEE ALSO SPECIFICATIONS DIVISION 15.

F. SEE SPECIFICATIONS FOR ADDITIONAL DETAILS.

G. DIRECT ALL QUESTIONS TO: BOLTON & MENK, INC. (507-625-4171)

H. ELECTRICAL CONTRACTOR SHALL REMOVE ALL CONTROL WIRING BACK TO SOURCE AFTER NEW CONTROLS ARE IN SERVICE. NO ABANDONED WIRE SHALL REMAIN. SEAL ALL ABANDONED CONDUIT AT FLOOR.

I. CONTRACTOR SHALL COMPLETE ALL WORK SO THAT PLANT REMAINS IN OPERATION. SEE DIVISION 1 FOR ADDITIONAL REQUIREMENTS. COMPLETE ALL WORK REQUIRING PLANT OPERATIONS STAFF DURING NORMAL WORK HOURS MONDAY THROUGH FRIDAY UNLESS SCHEDULED WITH OWNER.

◯ PLAN NOTES

1. PROVIDE A UNISTRUT STAND TO MOUNT DISCONNECT, CONTROL STATION AND CONTROL JUNCTION BOX.
2. INTERLOCK DISCONNECT WITH VFD SHUT DOWN.
3. PROVIDE A UNITSTRUT STAND TRUCK LOADING STATION AND CONTROL JUNCTION BOX.

SCALES SHOWN ON DRAWINGS ARE FOR 24"x36" SIZE SHEETS ONLY. DRAWINGS PLOTTED ON ANY OTHER SIZE SHEETS NEED TO HAVE SCALES ADJUSTED ACCORDINGLY

© Bolton & Menk, Inc. 2017, All Rights Reserved

0 1 2 3 4 6 8 12
Graphic Scale for 1/4"=1'-0"

Dolejs Associates, Inc.
Consulting Engineers
1624 N. Riverfront Dr.
Mankato, Minnesota
507-625-7869
17792 Idawood Path
Lakeville, Minnesota
952-435-6790

I HEREBY CERTIFY THAT THIS PLAN, SPECIFICATION OR REPORT WAS PREPARED BY ME OR UNDER MY DIRECT SUPERVISION, AND THAT I AM A DULY LICENSED PROFESSIONAL ENGINEER UNDER THE LAWS OF THE STATE OF MINNESOTA

SIGNATURE: Christopher J. Dolejs TYPED OR PRINTED NAME: Christopher J. Dolejs
DATE 12-04-2017 LIC. NO. 24771

BOLTON & MENK
www.bolton-menk.com

REV.	BY	DATE
A	CJD	12/04/2017

CITY OF WINDOM, MINNESOTA
2017 WASTEWATER TREATMENT FACILITY IMPROVEMENTS
BIOSOLIDS STORAGE TANK – ELECTRICAL POWER PLAN

SHEET 7.18

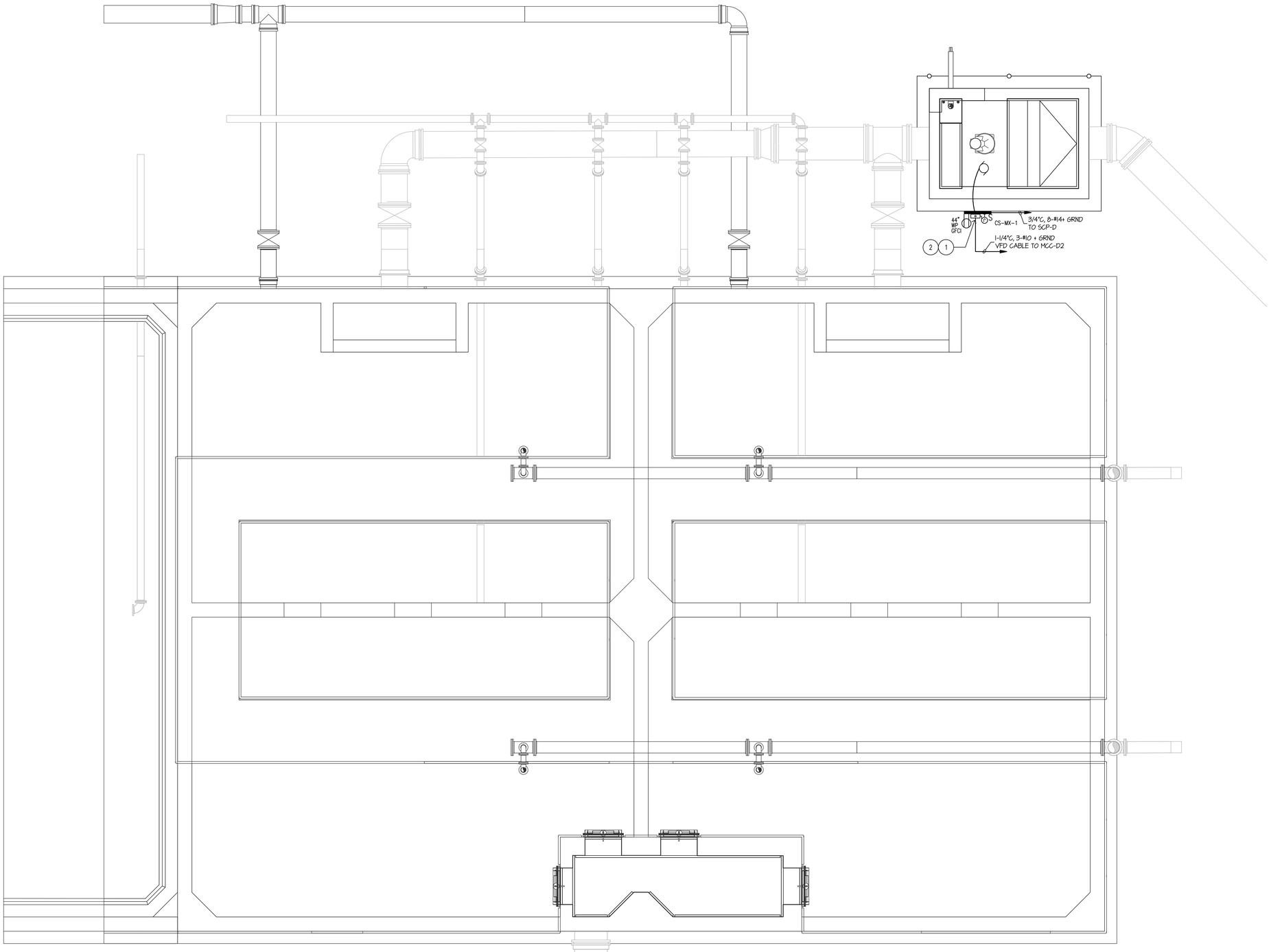

N

AERATION/RAPID MIX PLAN - ELECTRICAL

SCALE: 1/4"= 1'-0"

4 0 4
SCALE FEET

GENERAL NOTES

A. FOR BID PREPARATION, ELECTRICAL CONTRACTOR SHALL LOOK AT ALL DRAWINGS, AS PERTINENT INFORMATION IS NOT CONFINED TO THE 7.00 DRAWING SERIES.

B. ELECTRICAL CONTRACTOR SHALL COORDINATE WITH INSTRUMENTATION AND MECHANICAL CONTRACTORS AND SHALL BE RESPONSIBLE FOR ALL CONTROL WIRING. SEE SPECIFICATIONS, DIVISION 15 AND 16.

C. DUE TO THE SCALING OF DRAWINGS, IT IS NOT POSSIBLE TO SHOW EQUIPMENT LOCATIONS WITH PINPOINT ACCURACY. EQUIPMENT LOCATIONS ARE SUBJECT TO ENGINEER'S APPROVAL.

D. HANDHOLES MAY BE INSTALLED AT SUITABLE LOCATIONS AT CONTRACTOR'S OPTION. COORDINATE WITH GENERAL CONTRACTORS.

E. COORDINATE WITH GENERAL AND MECHANICAL CONTRACTORS. HVAC EQUIPMENT, CONTROL WIRING, AND THERMOSTAT INSTALLATION SHOWN ON SHEETS ELSEWHERE. SEE ALSO SPECIFICATIONS DIVISION 15.

F. SEE SPECIFICATIONS FOR ADDITIONAL DETAILS.

G. DIRECT ALL QUESTIONS TO: BOLTON & MENK, INC. (507-625-4171)

H. ELECTRICAL CONTRACTOR SHALL REMOVE ALL CONTROL WIRING BACK TO SOURCE AFTER NEW CONTROLS ARE IN SERVICE. NO ABANDONED WIRE SHALL REMAIN. SEAL ALL ABANDONED CONDUIT AT FLOOR.

I. CONTRACTOR SHALL COMPLETE ALL WORK SO THAT PLANT REMAINS IN OPERATION. SEE DIVISION 1 FOR ADDITIONAL REQUIREMENTS. COMPLETE ALL WORK REQUIRING PLANT OPERATIONS STAFF DURING NORMAL WORK HOURS MONDAY THROUGH FRIDAY UNLESS SCHEDULED WITH OWNER.

◯ PLAN NOTES

1. PROVIDE A UNISTRUT STAND ON HANDRAIL TO MOUNT DISCONNECT, CONTROL STATION AND CONTROL JUNCTION BOX.
2. INTERLOCK DISCONNECT WITH VFD SHUT DOWN.

SCALES SHOWN ON DRAWINGS ARE FOR 24"x36" SIZE SHEETS ONLY. DRAWINGS PLOTTED ON ANY OTHER SIZE SHEETS NEED TO HAVE SCALES ADJUSTED ACCORDINGLY

© Bolton & Menk, Inc. 2017, All Rights Reserved

0 1 2 3 4 6 8 12
Graphic Scale for 1/4"=1'-0"

Dolejs Associates, Inc.
Consulting Engineers
1624 N. Riverfront Dr. Mankato, Minnesota 507-625-7869
17792 Idlewood Path Lakeville, Minnesota 952-435-6790

I HEREBY CERTIFY THAT THIS PLAN, SPECIFICATION OR REPORT WAS PREPARED BY ME OR UNDER MY DIRECT SUPERVISION, AND THAT I AM A DULY LICENSED PROFESSIONAL ENGINEER UNDER THE LAWS OF THE STATE OF MINNESOTA

SIGNATURE: TYPED OR PRINTED NAME: Christopher J. Dolejs
DATE 12-04-2017 LIC. NO. 24771

BOLTON & MENK
www.bolton-menk.com

REV.	BY	DATE
A	CJD	12/04/2017

CITY OF WINDOM, MINNESOTA
2017 WASTEWATER TREATMENT FACILITY IMPROVEMENTS
AERATION/RAPID MIX PLAN – ELECTRICAL

SHEET 7.19

EXISTING PANEL SCHEDULE

PANEL NAME	EH2	277 / 480	VOLTS				MAINS	225A M.C.B.		
LOCATION	CONTROL	3	PHASE				AIC RATING	14,000		
MOUNTING	SURFACE	4	WIRE				OPTIONS			
RM. NO.	LOAD	BRKR	CKT	BUS			CKT	BRKR	LOAD	RM. NO.
	TRAVEL BRIDGE FILTER	30/3	1	X			2	15/3	F-1A VENT. FAN	BLOWER
– –	NO. 1	– –	3		X		4	– –	– –	– –
– –	– –	– –	5			X	6	– –	– –	– –
	TRAVEL BRIDGE FILTER	30/3	7	X			8	15/3	F-1B VENT. FAN	BLOWER
– –	NO. 2	– –	9		X		10	– –	– –	– –
– –	– –	– –	11			X	12	– –	– –	– –
	LIGHTING TRANS.	70/3	13	X			14	15/3	F-1C VENT. FAN	BLOWER
– –	– –	– –	15		X		16	– –	– –	– –
– –	– –	– –	17			X	18	– –	– –	– –
FILTER	P-CL-1 CL2 BOOST PUMP	15/3	19	X			20	15/3	SPARE	
– –	– –	– –	21		X		22	– –	– –	– –
– –	– –	– –	23			X	24	– –	– –	– –
CONTROL	P-CL -2 CL2 BOOST PUMP	15/3	25	X			26		PROV	
– –	– –	– –	27		X		28		PROV	
– –	– –	– –	29			X	30		PROV	
	PROV		31	X			32		PROV	
	PROV		33		X		34		PROV	
	PROV		35			X	36		PROV	
	PROV		37	X			38		PROV	
	PROV		39		X		40		PROV	
	PROV		41			X	42		PROV	

EXIST PANEL SCHEDULE

PANEL NAME	L3	120 / 208	VOLTS				MAINS	100A M.C.B.		
LOCATION	SLUDGE	3	PHASE				AIC RATING	14,000		
MOUNTING	SURFACE	4	WIRE				OPTIONS			
RM. NO.	LOAD	BRKR	CKT	BUS			CKT	BRKR	LOAD	RM. NO.
	LOWER LEVEL LIGHTING	20/1	1	X			2	20/1	LOWER LEVEL RECEPT.	
	UPPER LEVEL LIGHTING	20/1	3		X		4	20/1	BOILER/OLD BATH REC.	
	SLUDGE TANK 3&4 REC.	20/1	5			X	6	20/1	OLD BOILER/OLD CL2 REC.	
			7	X			8	20/1	SUMP PUMP – REC.	
SLUDGE	ELEC. HEAT EH-05	*35/3	9		X		10	20/1	BOILER BLOWER	
	– –	– –	11			X	12	20/1	P-HW-1 HOT WATER	
	– –	– –	13	X			14	20/1	PLC	
SLUDGE	ELEC. HEAT EH-05	35/3	15		X		16	20/1	PLC	
	– –	– –	17			X	18	20/1	PLC	
	– –	– –	19	X			20	20/1	PLC	
	VENT. CONTROL	20/1	21		X		22	20/1	LT-C1 LEVEL TRANSMIT.	
	VENT. CONTROL	20/1	23			X	24	20/1	LT-C2 LEVEL TRANSMIT.	
	SITE LIGHTING	20/1	25	X			26	20/1	NEW LIGHTING	EXT.
	PROV		27		X		28	20/1	SPARE	
	PROV		29			X	30	20/1	SPARE	
	PROV		31	X			32	20/1	SPARE	
	PROV		33		X		34	20/1	SPARE	
	PROV		35			X	36		PROV	
	PROV		37	X			38		PROV	
	PROV		39		X		40		PROV	
	PROV		41			X	42		PROV	

* FURNISH & INSTALL NEW CIRCUIT BREAKER SHOWN AS REQUIRED.

NEW PANEL SCHEDULE

PANEL NAME	H4	277 / 480	VOLTS				MAINS	150A M.C.B.		
LOCATION	PRETREAT	3	PHASE				AIC RATING	14,000		
MOUNTING	SURFACE	4	WIRE				OPTIONS			
RM. NO.	LOAD	BRKR	CKT	BUS			CKT	BRKR	LOAD	RM. NO.
DECHLOR	ELEC HEAT EH-01	15/3	1	X			2	15/3	ELEC HEAT EH-01	ELEC.
– –	– –	– –	3		X		4	– –	– –	– –
– –	– –	– –	5			X	6	– –	– –	– –
CH STOR	ELEC HEAT EH-01	15/3	7	X			8	20/3	ELEC HEAT EH-04	GRIT
– –	– –	– –	9		X		10	– –	– –	– –
– –	– –	– –	11			X	12	– –	– –	– –
CHLOR	ELEC HEAT EH-01	15/3	13	X			14		PROV	
– –	– –	– –	15		X		16		PROV	
– –	– –	– –	17			X	18		PROV	
CHLOR	ELEC HEAT EH-01	15/3	19	X			20		PROV	
– –	– –	– –	21		X		22		PROV	
– –	– –	– –	23			X	24		PROV	
MECH.	ELEC HEAT EH-02	15/3	25	X			26		PROV	
– –	– –	– –	27		X		28		PROV	
– –	– –	– –	29			X	30		PROV	
CHEM.	ELEC HEAT EH-03	20/3	31	X			32		PROV	
– –	– –	– –	33		X		34		PROV	
– –	– –	– –	35			X	36		PROV	
CHEM.	ELEC HEAT EH-03	20/3	37	X			38		PROV	
– –	– –	– –	39		X		40		PROV	
– –	– –	– –	41			X	42		PROV	

EXIST PANEL SCHEDULE

PANEL NAME	EL2	120 / 208	VOLTS				MAINS	150A M.C.B.		
LOCATION	CONTROL	3	PHASE				AIC RATING	14,000		
MOUNTING	SURFACE	4	WIRE				OPTIONS			
RM. NO.	LOAD	BRKR	CKT	BUS			CKT	BRKR	LOAD	RM. NO.
	LAB & COMPU. RM. LTS.	20/1	1	X			2	20/1	RECEPT. COMP. RM.	
CONTROL	LOWER LEVEL LTS	20/1	3		X		4	20/1	RECEPT. COMP. RM.	
	MECH/ELEC & HALL LTS	20/1	5			X	6	20/1	REC. – LAB/COMP. RM.	
	BLOWER RM. LTS.	20/1	7	X			8	20/1	REC. – LAB COUNTER	
FILTER	LIGHTS	20/1	9		X		10	20/1	REC. – LAB COUNTER	
FILTER	LIGHTS	20/1	11			X	12	20/1	REC. – LAB/MECH/ELEC	
FILTER	LIGHTS	20/1	13	X			14	20/1	REC./DAMPER – BLOWER	
CONTROL	LAB – EXH. FAN	20/1	15		X		16	20/1	BLOWER SURGE & VIBE	
	MENS ROOM	20/1	17			X	18	20/1	WOMENS RM	
	AER BASIN 1&2 RECEPT.	20/1	19	X			20	20/1	RECEPT – LOWER LEVEL	BLOWER
	CLARIFIER NO.1 LTS/REC.	20/1	21		X		22	20/1	RECEPT.	FILTER
	CLARIFIER NO.2 LTS/REC.	20/1	23			X	24	20/1	VENTILATION CONTROL	
	BLOWER INTAKE VALVE	20/1	25	X			26	20/1	VENTILATION CONTROL	
	OFFICE RECEPT.	20/1	27		X		28	20/1	FLOW SENSORS	
	CONF. RM REFRIGERATOR	20/1	29			X	30	20/1	PLC	
	CONF. RM RECEPT.	20/1	31	X			32	20/1	PLC	
	SUMP PUMP 1&2 REC.	15/3	33		X		34	20/1	PLC	
– –	– –	– –	35			X	36	*30/2	FAN COIL FC-1/CC-FC1	ELEC.
– –	– –	– –	37	X			38	– –	– –	– –
	AER BASIN 3&4 RECEPT.	20/1	39		X		40	20/1	OFFICE LIGHTS	
	FURNACE FAN MECH RM	20/1	41			X	42	20/1	CONF. RM. LTS	

* FURNISH & INSTALL NEW CIRCUIT BREAKER AS SHOWN.

NEW PANEL SCHEDULE

PANEL NAME	EL4	120 / 208	VOLTS				MAINS	100A M.C.B.		
LOCATION	PRETREAT	3	PHASE				AIC RATING	14,000		
MOUNTING	SURFACE	4	WIRE				OPTIONS			
RM. NO.	LOAD	BRKR	CKT	BUS			CKT	BRKR	LOAD	RM. NO.
DECHLOR	EXH. FAN EF-B	15/1	1	X			2	20/1		
CH STOR	EXH. FAN EF-C	15/1	3		X		4	20/1		
CHLOR	EXH. FAN EF-D	15/1	5			X	6	20/1		
CHLOR	EXH. FAN EF-E	15/1	7	X			8	20/1		
MECH	EXH. FAN EF-F	15/1	9		X		10	20/1		
CHEM	EXH. FAN EF-G	15/1	11			X	12	20/1		
CHEM	EXH. FAN EF-H	15/1	13	X			14	20/1		
MECH.	WATER HEATER DWH-02	20/1	15		X		16	15/2		
GRIT	SEWAGE PUMP SEP-01	20/1	17			X	18	– –		
MEC/ELE	FAN COIL FC-2/CC-FC2	30/2	19	X			20	20/1		
– –	– –	– –	21		X		22	20/1		
		20/1	23			X	24	20/1		
		20/1	25	X			26	20/1		
	SPARE	20/1	27		X		28	20/1		
	SPARE	20/1	29			X	30	20/1		
	SPARE	20/1	31	X			32		PROV	
	SPARE	20/1	33		X		34		PROV	
	SPARE	20/1	35			X	36		PROV	
	SPARE	20/1	37	X			38		PROV	
	PROV		39		X		40		PROV	
	PROV		41			X	42		PROV	

EXISTING PANEL SCHEDULE

PANEL NAME	H1	277 / 480	VOLTS				MAINS	150A M.C.B.		
LOCATION	CONTROL	3	PHASE				AIC RATING	14,000		
MOUNTING	SURFACE	4	WIRE				OPTIONS			
RM. NO.	LOAD	BRKR	CKT	BUS			CKT	BRKR	LOAD	RM. NO.
FILTER	UH-11 UNIT HEATER 15 KW	30/3	1	X			2	20/3	A.C. CONDENSING UNIT	
– –	– –	– –	3		X		4	– –	– –	– –
– –	– –	– –	5			X	6	– –	– –	– –
FILTER	UH-12 UNIT HEATER 15 KW	30/3	7	X			8	20/3	UH-7 UNIT HEATER	CONTROL
– –	– –	– –	9		X		10	– –	– –	– –
– –	– –	– –	11			X	12	– –	– –	– –
FILTER	UH-13 UNIT HEATER 10 KW	20/3	13	X			14		PROV	
– –	– –	– –	15		X		16		PROV	
– –	– –	– –	17			X	18		PROV	
FILTER	UH-14 UNIT HEATER 10 KW	20/3	19	X			20		PROV	
– –	– –	– –	21		X		22		PROV	
– –	– –	– –	23			X	24		PROV	
	LIGHTING TRANS.	40/3	25	X			26		PROV	
– –	– –	– –	27		X		28		PROV	
– –	– –	– –	29			X	30		PROV	

EXIST PANEL SCHEDULE

PANEL NAME	L1	120 / 208	VOLTS				MAINS	100A M.C.B.		
LOCATION	CONTROL	3	PHASE				AIC RATING	14,000		
MOUNTING	SURFACE	4	WIRE				OPTIONS			
RM. NO.	LOAD	BRKR	CKT	BUS			CKT	BRKR	LOAD	RM. NO.
	BLOWER MOTOR M. HEAT.	20/1	1	X			2	20/1	GEN LUBE OIL HEATER	
	CLARIFIER NO.1 EX. FAN.	20/1	3		X		4	20/1	GEN BLOCK HEATER	
	CLARIFIER NO.2 EX. FAN.	20/1	5			X	6	20/1	GEN CHARGER	
	WATER SOFTENER	20/1	7	X			8	20/1	VENT. FANS	FILTER
	SPARE	20/1	9		X		10	20/1	VENT. CONTROL	
CONTROL	WATER HEATER	*40/2	11			X	12	20/1	VENT. CONTROL	
– –	– –	– –	13	X			14	20/1	AERATION BASIN LTS.	
	SPARE	20/1	15		X		16	20/1	AERATION BASIN LTS.	
	SPARE	20/1	17			X	18	20/1	AERATION BASIN LTS.	
	SPARE	20/1	19	X			20	20/1	SLUDGE TANK NO. 1 LTS.	
	SPARE	20/1	21		X		22	20/1	SITE LIGHTING	
	SPARE	20/1	23			X	24	20/1	SITE LIGHTING	
	SPARE	20/1	25	X			26	*30/2	FAN COIL FC-1/CC-FC1	ELEC.
	PROV		27		X		28	– –	– –	
	PROV		29			X	30		PROV	
	PROV		31	X			32		PROV	
	PROV		33		X		34		PROV	
	PROV		35			X	36		PROV	
	PROV		37	X			38		PROV	
	PROV		39		X		40		PROV	
	PROV		41			X	42		PROV	

* FURNISH & INSTALL NEW CIRCUIT BREAKER AS SHOWN.

FIXTURE SCHEDULE

TYPE	DESCRIPTION	MANUFACTURER	SERIES	VOLT	CROSS SECTION LAMPS	BALLAST/ DRIVER	OPTICS	EQUAL MFGRS	NOTES
A	LED 4' INDUSTRIAL	LITHONIA	MSL-3L CLO	120	4K – LED 47W, 4800 LUMENS	LED DRIVER		WILLIAMS, METALUX LIGHTOLIER COLUMBIA,	CHAIN HANGER KIT 20% UP-LIGHT
A1	LED 4' INDUSTRIAL WALL MOUNT ENCLOSED & GASKETED	LITHONIA	FEML48 4000L IPAFL WD	120	4K – LED 31W, 4200 LUMENS	LED DRIVER		WILLIAMS, METALUX LIGHTOLIER COLUMBIA,	WALL MOUNT
A2	LED 4' INDUSTRIAL ENCLOSED & GASKETED	LITHONIA	FEML48 4000L IPAFL WD	120	4K – LED 31W, 4200 LUMENS	LED DRIVER		WILLIAMS, METALUX LIGHTOLIER COLUMBIA,	CHAIN HANGER KIT
B	LED 2x4 LAY-IN LENS TROFFER	LITHONIA	2TL4 48L RW A12	120	4K – LED 40W, 4800 LUMENS	LED DRIVER	.125" ACRYLIC LENS	COLUMBIA, WILLIAMS, METALUX	REGRESSED WHITE ALUMINUM DOOR FRAME, DIMMABLE
B1	LED 2x2 LAY-IN LENS TROFFER	LITHONIA	2TL2 33L RW A12	120	4K – LED 29W, 3300 LUMENS	LED DRIVER	.125" ACRYLIC LENS	COLUMBIA, WILLIAMS, METALUX	REGRESSED WHITE ALUMINUM DOOR FRAME, DIMMABLE
C	LED ARCHITECTURAL WALL PACK	LITHONIA	WSTLED1	MVOLT	LED 24W 4000K 1959 LUMEN	LED DRIVER	ACRYLIC LENS	MCGRAW	ALUMINUM HOUSING, FORWARD THROW DIST. DARK BRONZE FINISH, PHOTOELECTRIC CELL
C1	LED ARCHITECTURAL WALL PACK	LITHONIA	WSTLED2	MVOLT	LED 47W 4000K 4000 LUMEN	LED DRIVER	ACRYLIC LENS	MCGRAW	ALUMINUM HOUSING, FORWARD THROW DIST. DARK BRONZE FINISH, PHOTOELECTRIC CELL
D	CLASS 1, DIV. 1, GROUP C, D 4' FLUORESCENT	KILLARK	HFX-265-302	120	2 32W T8 35K	(1) 2-LAMP SS		APPLETON	HOUSING STAINLESS STEEL
D1	CLASS 1, DIV. 1, GROUP C, D 4' FLUORESCENT WALL MOUNT	KILLARK	HFX-265-302	120	2 32W T8 35K	(1) 2-LAMP SS		APPLETON	HOUSING STAINLESS STEEL WALL MOUNT
G	CLASS 1, DIV. 1, GROUP A,B,C,D LED, EXPLOSION PROOF STANCHION MOUNT	CROUSE-HINDS	EVLED J4 C201	120	LED 30W 5600K 1670 LUMENS	LED		APPLETON	PHOTO EYE STANCHION MOUNT
H	LED 6" RECESSED DOWNLIGHT	LITHONIA	LDN6 40 20 L06 AR LS EZ1	MULTI	LED 2000 LUMENS 40K, 24W	LED	SPECULAR REFLECTOR	OMEGA, INFINITY, INDY, PRESCOLITE PORTFOLIO, LIGHTOLIER	eldoLED DRIVER TO 1%, WIDE DIST.
J	LED 2' CONTEMPORARY WALL BRACKET	PRECISION ARCHITECTURAL LIGHTING	MLP3 I/D HO/HO K40 2 DC LOH N100 EZ1	MULTI	4K – LED 40W, 3560 LUMENS	LED	ACRYLIC DUST COVER	NEO-RAY	UP/DOWN LIGHT, ALUM HOUSING, nLIGHT ENABLED, WHITE FINISH, DUST COVER, eldoLED DRIVER TO 1%
S	LED AREA LIGHTING UNIT 16' POLE	LITHONIA VALMONT POLE	DSX1 LED 60C 700 40K T3M MVOLT SPA DDBXD DS330	MVOLT	LED –) 131W 4K, 14,919 LUMENS	1 LED DRIVER	TEMPERED GLASS LENS		16' STRAIGHT STEEL SQUARE POLE W/ BELL SHAPED BASE, VIBRATION DAMPER, CONC. BASE & ANCHOR BOLTS, R3 DIST, 4" WALL BRKT, DARK BRONZE
X	EXISTING LIGHT FIXTURE TO REMAIN								

WHEN NOTED "EQUAL MANUFACTURE", IT IS UNDERSTOOD TO MEAN THE ENGINEER'S AND ARCHITECT'S APPROVAL OF THE MANUFACTURE ONLY. HAVING PRIOR APPROVAL ON A MANUFACTURE ONLY, DOES NOT RELIEVE THE MANUFACTURE OF MEETING WHAT IS SPECIFIED. THE FINAL ACCEPTANCE OR REJECTION WILL BE BASED ON REVIEW OF THE SHOP DRAWINGS BY THE ENGINEER AND ARCHITECT.

SCALES SHOWN ON DRAWINGS ARE FOR 24"x36" SIZE SHEETS ONLY. DRAWINGS PLOTTED ON ANY OTHER SIZE SHEETS NEED TO HAVE SCALES ADJUSTED ACCORDINGLY

© Bolton & Menk, Inc. 2017, All Rights Reserved

Dolejs Associates, Inc.
Consulting Engineers
1624 N. Riverfront Dr. Mankato, Minnesota 507-625-7869
17792 Idawood Path Lakeville, Minnesota 952-435-6790

I HEREBY CERTIFY THAT THIS PLAN, SPECIFICATION OR REPORT WAS PREPARED BY ME OR UNDER MY DIRECT SUPERVISION, AND THAT I AM A DULY LICENSED PROFESSIONAL ENGINEER UNDER THE LAWS OF THE STATE OF MINNESOTA

SIGNATURE: TYPED OR PRINTED NAME: Christopher J. Dolejs
DATE 12-04-2017 LIC. NO. 24771

BOLTON & MENK
www.bolton-menk.com

REV.	BY	DATE
A	CJD	12/04/2017

CITY OF WINDOM, MINNESOTA
2017 WASTEWATER TREATMENT FACILITY IMPROVEMENTS
ELECTRICAL SCHEDULES

SHEET 7.20

EQUIPMENT SCHEDULE

PREFIX	SUFFIX	EQUIPMENT DESCRIPTION	ROOM	DEVICE DATA			STARTER	DISCONNECT	DISCONNECT LOCATION		CIRCUIT	FEEDER	CONTROL	REMARKS
				HP	V	PH			IN COMBO	ON UNIT				
B	01	BOILER	SLUDGE		120	1	NA	MOTOR SW BY DIV. 16		X	EXISTING L3 / 10	1/2"C. 2 # 12 + GRND	BY OTHERS	
CC	01	COMPRESSOR CONDENSOR	CONTROL EXT.	27.5 MCA	208	1	NA	60A, 3P, 3F BY DIV. 16 WEATHERPROOF		X		3/4"C. 3 # 8 + GRND	BY OTHERS	M.O.C.P. = 40A/2P
CC	FC1	COMPRESSOR CONDENSOR	CONTROL LOWER LEVEL	20 MCA	208	1	NA	30A, 2P, 3F BY DIV. 16		X	EL2 / 36, 38	3/4"C. 2 #10 + GRND	BY OTHERS	M.O.C.P. = 30A/2P UNIT TO FEED FAN COIL FC-1
CC	FC2	COMPRESSOR CONDENSOR	PRETREAT MECH.	20 MCA	208	1	NA	30A, 2P, 3F BY DIV. 16		X	EL4 / 19, 21	3/4"C. 2 #10 + GRND	BY OTHERS	M.O.C.P. = 30A/2P UNIT TO FEED FAN COIL FC-2
DFU	01	DIRECT FIRED UNIT	PRETREAT	10 HP	480	3	VFD BY DIV. 15	PROVIDED W/UNIT		X		3/4"C. 3 # 12 + GRND	BY OTHERS	PROVIDE INTERLOCK WIRING TO PWV-03 & PWV-04
DWH	01	WATER HEATER	CONTROL	6 KW	208	1	NA	60A, 2P, 2F BY DIV. 16			L1 / 11, 13	1/2"C. 2 # 8 + GRND	BY OTHERS	
DWH	02	WATER HEATER	PRETREAT	5.0 MCA	120	1	NA	--			EL4 / 15	1/2"C. 2 # 12 + GRND	BY OTHERS	CONTROL POWER
EF	01	EXHAUST FAN	CONTROL BATH		120	1	NA	MOTOR SW BY DIV. 16		X	EXISTING	1/2"C. 2 #12 + GRND	EXISTING	
EF	02	EXHAUST FAN	CONTROL LAB		120	1	NA	MOTOR SW BY DIV. 16		X	EXISTING	1/2"C. 2 #12 + GRND	EXISTING	
EF	03	EXHAUST FAN	CONTROL BATH		120	1	NA	MOTOR SW BY DIV. 16		X	EXISTING	1/2"C. 2 #12 + GRND	EXISTING	
EF	A	EXHAUST FAN	SLUDGE	1/6 HP ECM	120	1	NA	MOTOR SW BY DIV. 16		X	EXISTING	1/2"C. 2 #12 + GRND	SWITCH WITH LIGHTS	PROVIDE 120V INTERLOCK TO MOTORIZED DAMPER. COORDINATE WITH DIV 15.
EF	B	EXHAUST FAN	PRETREAT	1/6 HP ECM	120	1	NA	MOTOR SW BY DIV. 16		X	EL4 / 1	1/2"C. 2 #12 + GRND	SWITCH WITH PILOT	PROVIDE 120V INTERLOCK TO MOTORIZED DAMPER. COORDINATE WITH DIV 15.
EF	C	EXHAUST FAN	PRETREAT	1/6 HP ECM	120	1	NA	MOTOR SW BY DIV. 16		X	EL4 / 3	1/2"C. 2 #12 + GRND	SWITCH WITH PILOT	PROVIDE 120V INTERLOCK TO MOTORIZED DAMPER. COORDINATE WITH DIV 15.
EF	D	EXHAUST FAN	PRETREAT	1/6 HP ECM	120	1	NA	MOTOR SW BY DIV. 16		X	EL4 / 5	1/2"C. 2 #12 + GRND	SWITCH WITH PILOT	PROVIDE 120V INTERLOCK TO MOTORIZED DAMPER. COORDINATE WITH DIV 15.
EF	E	EXHAUST FAN	PRETREAT	1/6 HP ECM	120	1	NA	MOTOR SW BY DIV. 16		X	EL4 / 7	1/2"C. 2 #12 + GRND	SWITCH WITH PILOT	PROVIDE 120V INTERLOCK TO MOTORIZED DAMPER. COORDINATE WITH DIV 15.
EF	F	EXHAUST FAN	PRETREAT	1/6 HP ECM	120	1	NA	MOTOR SW BY DIV. 16		X	EL4 / 9	1/2"C. 2 #12 + GRND	SWITCH WITH PILOT	PROVIDE 120V INTERLOCK TO MOTORIZED DAMPER. COORDINATE WITH DIV 15.
EF	G	EXHAUST FAN	PRETREAT	1/6 HP ECM	120	1	NA	MOTOR SW BY DIV. 16		X	EL4 / 11	1/2"C. 2 #12 + GRND	SWITCH WITH PILOT	PROVIDE 120V INTERLOCK TO MOTORIZED DAMPER. COORDINATE WITH DIV 15.
EF	H	EXHAUST FAN	PRETREAT	1/6 HP ECM	120	1	NA	MOTOR SW BY DIV. 16		X	EL4 / 13	1/2"C. 2 #12 + GRND	SWITCH WITH PILOT	PROVIDE 120V INTERLOCK TO MOTORIZED DAMPER. COORDINATE WITH DIV 15.
EH	01	ELECTRIC HEAT	SEE PLANS	3 KW	480	3	NA	30A, 3P, NF BY DIV. 16		X	SEE PLANS	1/2"C. 2 #12 + GRND	T-STAT ON WALL	BERKO HUHAA 348 WITH REMOTE T-STAT.
EH	02	ELECTRIC HEAT	SEE PLANS	5 KW	480	3	NA	30A, 3P, NF BY DIV. 16		X	SEE PLANS	1/2"C. 3 #12 + GRND	T-STAT ON WALL	BERKO HUHAA 548 WITH REMOTE T-STAT.
EH	03	ELECTRIC HEAT	SEE PLANS	10 KW	480	3	NA	30A, 3P, NF BY DIV. 16		X	SEE PLANS	1/2"C. 3 #12 + GRND	T-STAT ON WALL	BERKO HUHAA 1048 WITH REMOTE T-STAT.
EH	04	ELECTRIC HEAT	SEE PLANS	10 KW	480	3	NA	30A, 3P, NF BY DIV. 16		X	SEE PLANS	1/2"C. 3 #12 + GRND	T-STAT ON WALL	BERKO RUX10004832 WITH REMOTE T-STAT.
EH	05	ELECTRIC HEAT	SEE PLANS	10 KW	208	3	NA	30A, 3P, NF BY DIV. 16		X	SEE PLANS	1/2"C. 3 #8 + GRND	T-STAT ON WALL	BERKO HUHAA 1020 WITH REMOTE T-STAT.
EH	06	ELECTRIC HEAT	SEE PLANS	15 KW	480	3	NA	30A, 3P, NF BY DIV. 16		X	SEE PLANS	1/2"C. 3 #12 + GRND	T-STAT ON WALL	BERKO HUHAA 1548 WITH REMOTE T-STAT.
F	01	FURNACE	CONTROL MECH.	1 HP	120	1	NA	MOTOR SW BY DIV. 16		X		3/4"C. 2 # 10 + GRND	BY OTHERS	
FC	1	FAN COIL	CONTROL ELEC	20 MCA	208	1	NA	MOTOR SW BY DIV. 16		X	EL2 / 36, 38	3/4"C. 2 #10 + GRND	BY OTHERS	M.O.C.P. = 30A/2P UNIT TO BE FED FROM COMP COND. CC-FC1
FC	2	FAN COIL	PRETREAT ELEC	20 MCA	208	1	NA	MOTOR SW BY DIV. 16		X	EL4 / 19, 21	3/4"C. 2 #10 + GRND	BY OTHERS	M.O.C.P. = 30A/2P UNIT TO BE FED FROM COMP COND. CC-FC2
P	01	PUMP	SLUDGE	3/4 HP	120	1	NA	MOTOR SW BY DIV. 16		X	EXISTING L3 / 12	3/4"C. 2 # 10 + GRND	BY OTHERS	
PWV	01	POWER WALL VENTILATOR	FILTER	1/4 HP ECM	120	1	NA	MOTOR SW BY DIV. 16		X		3/4"C. 2 #12 + GRND	BY OTHERS	
PWV	02	POWER WALL VENTILATOR	FILTER	1/4 HP ECM	120	1	NA	MOTOR SW BY DIV. 16		X		3/4"C. 2 #12 + GRND	BY OTHERS	
PWV	03	POWER WALL VENTILATOR	PRETREAT	1 HP	480	3	PROVIDED W/ DFU-01 BY DIV 15	30A, 3P, NF BY DIV. 16		X	H4 / 14, 16, 18	3/4"C. 4 # 12 + GRND	BY OTHERS	PROVIDE NEUTRAL TO UNIT TO CONTROL 120V MOTORIZED DAMPER, COORDINAT WITH DIV. 15. INTERLOCK WITH DFU-01
PWV	04	POWER WALL VENTILATOR	PRETREAT	1-1/2 HP	480	3	PROVIDED W/ DFU-01 BY DIV 15	30A, 3P, NF BY DIV. 16		X	H4 / 20, 22, 24	3/4"C. 4 # 12 + GRND	BY OTHERS	PROVIDE NEUTRAL TO UNIT TO CONTROL 120V MOTORIZED DAMPER, COORDINAT WITH DIV. 15. INTERLOCK WITH DFU-01
SEP	01	SEWAGE EJECTOR PUMP	PRETREAT	1/2 HP	120	1	CONTROL PANEL W/UNIT	W/UNIT		X	EL4 / 17	3/4"C. 2 #12 + GRND	BY OTHERS	CLASS 1, DIV. 1 AREA.
SF	01	SUPPLY FAN	CONTROL	5 HP	480	3	COMBINATION FVNR BY DIV. 16	30A, 3P, NF BY DIV. 16	X		EXISTING EH2 / 2, 4, 6	3/4"C. 3 # 12 + GRND	BY OTHERS	RE-USE EXISTING CIRCUIT BREAKER. EXTEND CONDUIT & CONDUCTORS AS REQUIRED.
SF	02	SUPPLY FAN	CONTROL	5 HP	480	3	COMBINATION FVNR BY DIV. 16	30A, 3P, NF BY DIV. 16	X		EXISTING EH2 / 8, 10, 12	3/4"C. 3 # 12 + GRND	BY OTHERS	RE-USE EXISTING CIRCUIT BREAKER. EXTEND CONDUIT & CONDUCTORS AS REQUIRED.
SF	03	SUPPLY FAN	CONTROL	5 HP	480	3	COMBINATION FVNR BY DIV. 16	30A, 3P, NF BY DIV. 16	X		EXISTING EH2 / 14, 16, 18	3/4"C. 3 # 12 + GRND	BY OTHERS	RE-USE EXISTING CIRCUIT BREAKER. EXTEND CONDUIT & CONDUCTORS AS REQUIRED.
SP	04	SUMP PUMP	FILTER	FRAC HP	120	1	NA	CORD AND CAP PROVIDED W/UNIT		X		3/4"C. 2 #12 + GRND	BY OTHERS	MOUNT RECEPTACLE WITH-IN 36" OF PIT

NOTE: VFD'S, MOUNTING OF VFD'S, PROGRAMMING AND CONTROL WIRING BY DIV. 23 OR A.T.C. CONTRACTOR. POWER CONDUIT AND CONDUCTORS BY DIV. 26. CHECK OUT AND START UP BY A.T.C.

SCALES SHOWN ON DRAWINGS ARE FOR 24"x36" SIZE SHEETS ONLY. DRAWINGS PLOTTED ON ANY OTHER SIZE SHEETS NEED TO HAVE SCALES ADJUSTED ACCORDINGLY

© Bolton & Menk, Inc. 2017, All Rights Reserved

Dolejs Associates, Inc.
Consulting Engineers
1624 N. Riverfront Dr. Mankato, Minnesota 507-625-7869
17792 Idawood Path Lakeville, Minnesota 952-435-6790

I HEREBY CERTIFY THAT THIS PLAN, SPECIFICATION OR REPORT WAS PREPARED BY ME OR UNDER MY DIRECT SUPERVISION, AND THAT I AM A DULY LICENSED PROFESSIONAL ENGINEER UNDER THE LAWS OF THE STATE OF MINNESOTA

SIGNATURE: TYPED OR PRINTED NAME: Christopher J. Dolejs

DATE 12-04-2017 LIC. NO. 24771

BOLTON & MENK

www.bolton-menk.com

REV.	BY	DATE
A	CJD	12/04/2017

CITY OF WINDOM, MINNESOTA

2017 WASTEWATER TREATMENT FACILITY IMPROVEMENTS

ELECTRICAL SCHEDULES

SHEET 7.21

EQUIPMENT SCHEDULE

PREFIX	SUFFIX	EQUIPMENT DESCRIPTION	ROOM	DEVICE DATA			STARTER	DISCONNECT	DISCONNECT LOCATION		CIRCUIT	FEEDER	CONTROL	REMARKS
				HP	V	PH			IN COMBO	ON UNIT				
A	1	AERATION BLOWER #1	CONTROL BUILDING	60 HP	460	3	VFD BY DIV. 16	110A,3P, NF BY DIV. 16 NEMA 1	X		MCC A	1-1/2"C 3 #2 + GRND	3/4"C 6-#14 TO SCP	HIGH TEMP SWITCH AND ON/OFF CONTROL STATION
A	2	AERATION BLOWER #2	CONTROL BUILDING	100 HP	460	3	VFD BY DIV. 16	200A,3P, NF BY DIV. 16 NEMA 1	X		MCC-A	2-1/2"C 3-#3/0 + GRND	3/4"C 6-#14 TO SCP	HIGH TEMP SWITCH AND ON/OFF CONTROL STATION
A	3	AERATION BLOWER #3	CONTROL BUILDING	100 HP	460	3	VFD BY DIV. 16	200A,3P, NF BY DIV. 16 NEMA 1	X		MCC-B	2-1/2"C 3-#3/0 + GRND	3/4"C 6-#14 TO SCP	HIGH TEMP SWITCH AND ON/OFF CONTROL STATION
A	4	AERATION BLOWER #4	CONTROL BUILDING	100 HP	460	3	VFD BY DIV. 16	200A,3P, NF BY DIV. 16 NEMA 1	X		MCC-B	2-1/2"C 3-#3/0 + GRND	3/4"C 6-#14 TO SCP	HIGH TEMP SWITCH AND ON/OFF CONTROL STATION
A	5	AERATION BLOWER #4	CONTROL BUILDING	15 HP	460	3	VFD BY DIV. 16	40A,3P, NF BY DIV. 16 NEMA 1	X		MCC-B	1"C 3-#8 + GRND	3/4"C 6-#14 TO SCP	HIGH TEMP SWITCH AND ON/OFF CONTROL STATION
AR	1	ANOXIC RETURN PUMP	ANOXIC BASIN	7.5 HP	460	3	VFD BY DIV. 16	30A, 3P, NF BY DIV. 16 NEMA 3R	X		MCC-D2 X	1"C. 3-#10 + GRND	1"C 12-#14 TO SCP	SEAL FAILURE AND MOTOR TEMP MODULE IN BREAK PANEL. 4-#16 CU CONDUCTORS FROM PUMP TO SCP-1 FOR SEAL FAILURE AND MOTOR TEMP
AR	1	ANOXIC RETURN PUMP	ANOXIC BASIN	7.5 HP	460	3	VFD BY DIV. 16	30A, 3P, NF BY DIV. 16 NEMA 3R	X		MCC-D2 X	1"C. 3-#10 + GRND	1"C 12-#14 TO SCP	SEAL FAILURE AND MOTOR TEMP MODULE IN BREAK PANEL. 4-#16 CU CONDUCTORS FROM PUMP TO SCP-1 FOR SEAL FAILURE AND MOTOR TEMP
BS	1	BAR SCREEN	PRE TREAT	2 HP	460	3	BY EQUIP. SUPPLIER	30A, 3P, NF BY DIV. 16 NEMA 7	X		MCC-D1 X	3/4"C. 3 #12 + GRND	3/4"C 6-#14 TO SCP	CLASS 1, DIV. 1, ON/OFF CONT. STATION CONTROL PANEL BY EQUIPMENT SUPPLIER SPRAY WASH SOLINOID VALVE & E-STOP BUTTON
BS	2	BAR SCREEN	PRE TREAT	2 HP	460	3	BY EQUIP. SUPPLIER	30A, 3P, NF BY DIV. 16 NEMA 7	X		MCC-D2 X	3/4"C. 3 #12 + GRND	3/4"C 6-#14 TO SCP	CLASS 1, DIV. 1, ON/OFF CONT. STATION CONTROL PANEL BY EQUIPMENT SUPPLIER SPRAY WASH SOLINOID VALVE & E-STOP BUTTON
CF	1	CARBON FEED PUMP	CHEM. ROOM	FRACT.	120	1	N/A	OUTLET AND PLUG			PP-I /5	3/4"C. 2 #12+ GRND	1 TWP TO SCP	PROVIDE CONTROLLED OUTLET IN CHEMICAL ROOM.
CF	2	CARBON FEED PUMP	CHEM. ROOM	FRACT.	120	1	N/A	OUTLET AND PLUG			PP-I / 6	3/4"C. 2 #12+ GRND	1 TWP TO SCP	PROVIDE CONTROLLED OUTLET IN CHEMICAL ROOM.
CL	1	CHLORINE FEED FEED PUMP	CONTACT BASIN	2 HP	460	3	COMBINATION FVNR BY DIV. 16	30A, 3P, NF BY DIV. 16 NEMA 3R	X		MCC-D2 X	1"C. 3-#10+ GRND	1"C 12-#14 TO SCP	
DF	1	DISC FILTER	FILTER BUILDING	5 HP	460	3	VFD BY MANUFAC.	60A, 3P, NF BY DIV. 16 NEMA 3R	X		MCC-B X	1"C. 3-#10+ GRND	1"C 12-#14 TO SCP	
DF	2	DISC FILTER	FILTER BUILDING	5 HP	460	3	VFD BY MANUFAC.	60A, 3P, NF BY DIV. 16 NEMA 3R	X		MCC-B X	1"C. 3-#10+ GRND	1"C 12-#14 TO SCP	
FC	1	FINAL CLARIFIER DRIVE #1	FINAL CLARIFIER #1	1/2 HP	460	3	VFD BY DIV. 16	30A, 3P, NF BY DIV. 16 NEMA 3R	X		MCC-D2 X	3/4"C. 3-#10 + GRND	1"C 12-#14 TO SCP	4-#16 CU CONDUCTORS FROM PUMP TO SCP-1 FOR
FC	2	FINAL CLARIFIER DRIVE	FINAL CLARIFIER #2	1/2 HP	460	3	VFD BY DIV. 16	30A, 3P, NF BY DIV. 16 NEMA 3R	X		MCC-D2 X	3/4"C. 3-#10 + GRND	1"C 12-#14 TO SCP	4-#16 CU CONDUCTORS FROM PUMP TO SCP-1 FOR
FF	1	FEERIC FEED PUMP	CHEM. ROOM	3/4 HP	120	1	N/A	OUTLET AND PLUG			PP-I / 3	3/4"C. 2 #12+ GRND	1 TWP TO SCP	PROVIDE CONTROLLED OUTLET IN CHEMICAL ROOM.
FF	2	FEERIC FEED PUMP	CHEM. ROOM	3/4 HP	120	1	N/A	OUTLET AND PLUG			PP-I / 4	3/4"C. 2 #12+ GRND	1 TWP TO SCP	PROVIDE CONTROLLED OUTLET IN CHEMICAL ROOM.
GC	1	GRIT CLASSIFIER	PRE TREAT	3/4 HP	460	3	COMBINATION FVNR BY DIV. 16	30A, 3P, NF BY DIV. 16 NEMA 7	X		MCC-D2 X	3/4"C. 3 #12 + GRND	3/4"C 6-#14 TO SCP	CLASS 1, DIV. 1 ON/OFF CONTROL STATION
GP	1	GRIT PUMP	PRE TREAT	15 HP	460	3	COMBINATION FVNR BY DIV. 16	60A, 3P, NF BY DIV. 16 NEMA 7	X		MCC-D2 X	1"C. 3 #8 + GRND	3/4"C 6-#14 TO SCP	2-#14 CU CONDUCTORS FOR SEAL WATER SOLINOID CONTROL FROM PUMP TO SCP-2 CLASS 1, DIV. 1, ON/OFF CONT. STATION
GS	1	GRIT REMOVAL	PRE TREAT	1.5 HP	460	3	COMBINATION FVNR BY DIV. 16	30A, 3P, NF BY DIV. 16 NEMA 7	X		MCC-D2 X	3/4"C. 3 #12 + GRND	3/4"C 6-#14 TO SCP	CLASS 1, DIV. 1 ON/OFF CONTROL STATION
MH	01	MAGNSIUM HYDROXIDE FEED PUMP	CHEM. ROOM	FRACT.	120	1	N/A	OUTLET AND PLUG			PP-I / 1	3/4"C. 2 #12+ GRND	1 TWP TO SCP	PROVIDE CONTROLLED OUTLET IN CHEMICAL ROOM.
MH	02	MAGNSIUM HYDROXIDE FEED PUMP	CHEM. ROOM	FRACT.	120	1	N/A	OUTLET AND PLUG			PP-I / 2	3/4"C. 2 #12+ GRND	1 TWP TO SCP	PROVIDE CONTROLLED OUTLET IN CHEMICAL ROOM.
ML	1	MIXED LIQUOR PUMP	MIX LIQUOR STRUCT.	15 HP	460	3	VFD BY DIV. 16	30A, 3P, NF BY DIV. 16 NEMA 3R	X		MCC-2 X	1"C. 3-#12+ GRND	1"C 12-#14 TO SCP	SEAL FAILURE AND MOTOR TEMP MODULE. 4-#16 CU CONDUCTORS FROM PUMP TO SCP-1 FOR SEAL FAILURE AND MOTOR TEMP
ML	2	MIXED LIQUOR PUMP	MIX LIQUOR STRUCT.	15 HP	460	3	VFD BY DIV. 16	30A, 3P, NF BY DIV. 16 NEMA 3R	X		MCC-2 X	1"C. 3-#12+ GRND	1"C 12-#14 TO SCP	SEAL FAILURE AND MOTOR TEMP MODULE. 4-#16 CU CONDUCTORS FROM PUMP TO SCP-1 FOR SEAL FAILURE AND MOTOR TEMP
MX	1	ANAEROBIC SUBMERSIBLE MIXER	LIFT STATION	7.5 HP	460	3	VFD BY DIV. 16	30A, 3P, NF BY DIV. 16 NEMA 3R	X		MCC-D2 X	1"C. 3-#10 + GRND	1"C 12-#14 TO SCP	SEAL FAILURE AND MOTOR TEMP MODULE IN BREAK PANEL. 4-#16 CU CONDUCTORS FROM PUMP TO SCP-1 FOR SEAL FAILURE AND MOTOR TEMP
MX	2	ANAEROBIC SUBMERSIBLE MIXER	LIFT STATION	7.5 HP	460	3	VFD BY DIV. 16	30A, 3P, NF BY DIV. 16 NEMA 3R	X		MCC-D2 X	1"C. 3-#10 + GRND	1"C 12-#14 TO SCP	SEAL FAILURE AND MOTOR TEMP MODULE IN BREAK PANEL. 4-#16 CU CONDUCTORS FROM PUMP TO SCP-1 FOR SEAL FAILURE AND MOTOR TEMP
MX	3	ANOXIC SUBMERSIBLE MIXER	ANOXIC BASIN	7.5 HP	460	3	VFD BY DIV. 16	30A, 3P, NF BY DIV. 16 NEMA 3R	X		MCC-D2 X	1"C. 3-#10 + GRND	1"C 12-#14 TO SCP	SEAL FAILURE AND MOTOR TEMP MODULE IN BREAK PANEL. 4-#16 CU CONDUCTORS FROM PUMP TO SCP-1 FOR SEAL FAILURE AND MOTOR TEMP
MX	4	ANOXIC SUBMERSIBLE MIXER	ANOXIC BASIN	7.5 HP	460	3	VFD BY DIV. 16	30A, 3P, NF BY DIV. 16 NEMA 3R	X		MCC-D2 X	1"C. 3-#10 + GRND	1"C 12-#14 TO SCP	SEAL FAILURE AND MOTOR TEMP MODULE IN BREAK PANEL. 4-#16 CU CONDUCTORS FROM PUMP TO SCP-1 FOR SEAL FAILURE AND MOTOR TEMP
MX	5	SLUDGE MIXER	SLUDGE TANK	40 HP	460	3	COMBINATION FVNR BY DIV. 16	60A, 3P, NF BY DIV. 16 NEMA 3R	X		MCC-C X	1"C. 3-#8 + GRND	1"C 12-#14 TO SCP	SEAL FAILURE AND MOTOR TEMP MODULE IN BREAK PANEL. 4-#16 CU CONDUCTORS FROM PUMP TO SCP-1 FOR SEAL FAILURE AND MOTOR TEMP
MX	6	SLUDGE MIXER	SLUDGE TANK	40 HP	460	3	COMBINATION FVNR BY DIV. 16	60A, 3P, NF BY DIV. 16 NEMA 3R	X		MCC-C X	1"C. 3-#8 + GRND	1"C 12-#14 TO SCP	SEAL FAILURE AND MOTOR TEMP MODULE IN BREAK PANEL. 4-#16 CU CONDUCTORS FROM PUMP TO SCP-1 FOR SEAL FAILURE AND MOTOR TEMP
MX	7	SLUDGE MIXER	SLUDGE TANK	40 HP	460	3	COMBINATION FVNR BY DIV. 16	60A, 3P, NF BY DIV. 16 NEMA 3R	X		MCC-C X	1"C. 3-#8 + GRND	1"C 12-#14 TO SCP	SEAL FAILURE AND MOTOR TEMP MODULE IN BREAK PANEL. 4-#16 CU CONDUCTORS FROM PUMP TO SCP-1 FOR SEAL FAILURE AND MOTOR TEMP
MX	8	MAGNSIUM TANK MIXER	SLUDGE TANK	3 HP	460	3	COMBINATION FVNR BY DIV. 16	30A, 3P, NF BY DIV. 16 NEMA 3R	X		MCC-D2 X	1"C. 3-#10 + GRND	1"C 12-#14 TO SCP	

EQUIPMENT SCHEDULE

PREFIX	SUFFIX	EQUIPMENT DESCRIPTION	ROOM	DEVICE DATA			STARTER	DISCONNECT	DISCONNECT LOCATION		CIRCUIT	FEEDER	CONTROL	REMARKS
				HP	V	PH			IN COMBO	ON UNIT				
RAS	1	RETURN ACTIVATED SLUDGE	CONTROL BUILDING	10 HP	460	3	VFD BY DIV. 16	30A, 3P, NF BY DIV. 16 NEMA 3R	X		MCC-B X	1"C. 3-#10+ GRND	1"C 12-#14 TO SCP	SEAL FAILURE AND MOTOR TEMP MODULE. 4-#16 CU CONDUCTORS FROM PUMP TO SCP-1 FOR SEAL FAILURE AND MOTOR TEMP
RAS	2	RETURN ACTIVATED SLUDGE	CONTROL BUILDING	10 HP	460	3	VFD BY DIV. 16	30A, 3P, NF BY DIV. 16 NEMA 3R	X		MCC-B X	1"C. 3-#10+ GRND	1"C 12-#14 TO SCP	SEAL FAILURE AND MOTOR TEMP MODULE. 4-#16 CU CONDUCTORS FROM PUMP TO SCP-1 FOR SEAL FAILURE AND MOTOR TEMP
RAS	3	RETURN ACTIVATED SLUDGE	CONTROL BUILDING	10 HP	460	3	VFD BY DIV. 16	30A, 3P, NF BY DIV. 16 NEMA 3R	X		MCC-A X	1"C. 3-#10+ GRND	1"C 12-#14 TO SCP	SEAL FAILURE AND MOTOR TEMP MODULE. 4-#16 CU CONDUCTORS FROM PUMP TO SCP-1 FOR SEAL FAILURE AND MOTOR TEMP
RM	1	RAPID MIXER	RAPID MIX STRUCT.	1.5 HP	460	3	VFD BY DIV. 16	30A, 3P, NF BY DIV. 16 NEMA 1	X		MCC-2 X	1"C. 3-#12+ GRND	1"C 12-#14 TO SCP	SEAL FAILURE AND MOTOR TEMP MODULE. 4-#16 CU CONDUCTORS FROM PUMP TO SCP-1 FOR SEAL FAILURE AND MOTOR TEMP
SC	1	SCUM PUMP	CONTROL BUILDING	5 HP	460	3	VFD BY DIV. 16	30A, 3P, NF BY DIV. 16 NEMA 3R	X		MCC-B X	1"C. 3-#10+ GRND	1"C 12-#14 TO SCP	SEAL FAILURE AND MOTOR TEMP MODULE. 4-#16 CU CONDUCTORS FROM PUMP TO SCP-1 FOR SEAL FAILURE AND MOTOR TEMP
SO	1	SUFUR DIOXIDE FEED PUMP	CONTACT BASIN	2 HP	460	3	COMBINATION FVNR BY DIV. 16	30A, 3P, NF BY DIV. 16 NEMA 3R	X		MCC-D2 X	1"C. 3-#10+ GRND	1"C 12-#14 TO SCP	
SP	1	SCREEN WASHER/PRESS	PRE TREAT	3 HP	460	3	BY EQUIP. SUPPLIER	30A, 3P, NF BY DIV. 16 NEMA 7	X		MCC-D2 X	3/4"C. 3 #12 + GRND	3/4"C 6-#14 TO SCP	CLASS 1, DIV. 1, ON/OFF CONT. STATION CONTROL PANEL BY EQUIPMENT SUPPLIER SPRAY WASH SOLINOID VALVE & E-STOP BUTTON
SP	2	SCREEN WASHER/PRESS	PRE TREAT	3 HP	460	3	BY EQUIP. SUPPLIER	30A, 3P, NF BY DIV. 16 NEMA 7	X		MCC-D2 X	3/4"C. 3 #12 + GRND	3/4"C 6-#14 TO SCP	CLASS 1, DIV. 1, ON/OFF CONT. STATION CONTROL PANEL BY EQUIPMENT SUPPLIER SPRAY WASH SOLINOID VALVE & E-STOP BUTTON
SR	1	SLUDGE RECIRC. PUMP	SLUDGE BUILDING	5 HP	460	3	VFD BY DIV. 16	30A, 3P, NF BY DIV. 16 NEMA 1	X		MCC-C X	1"C. 3-#10+ GRND	1"C 12-#14 TO SCP	
ST	1	SLUDGE TRANSFER	SLUDGE BUILDING	10 HP	460	3	VFD BY DIV. 16	30A, 3P, NF BY DIV. 16 NEMA 1	X		MCC-C X	1"C. 3-#10+ GRND	1"C 12-#14 TO SCP	
ST	2	SLUDGE TRANSFER	SLUDGE BUILDING	10 HP	460	3	VFD BY DIV. 16	30A, 3P, NF BY DIV. 16 NEMA 1	X		MCC-C X	1"C. 3-#10+ GRND	1"C 12-#14 TO SCP	

NOTE: VFD'S, MOUNTING OF VFD'S, PROGRAMMING AND CONTROL WIRING BY DIV. 23 OR A.T.C. CONTRACTOR. POWER CONDUIT AND CONDUCTORS BY DIV. 26. CHECK OUT AND START UP BY A.T.C.

SCALES SHOWN ON DRAWINGS ARE FOR 24"x36" SIZE SHEETS ONLY. DRAWINGS PLOTTED ON ANY OTHER SIZE SHEETS NEED TO HAVE SCALES ADJUSTED ACCORDINGLY

© Bolton & Menk, Inc. 2017, All Rights Reserved

Dolejs Associates, Inc. Consulting Engineers
1624 N. Riverfront Dr. Mankato, Minnesota 507-625-7669
17792 Idawood Path Lakeville, Minnesota 952-435-6790

I HEREBY CERTIFY THAT THIS PLAN, SPECIFICATION OR REPORT WAS PREPARED BY ME OR UNDER MY DIRECT SUPERVISION, AND THAT I AM A DULY LICENSED PROFESSIONAL ENGINEER UNDER THE LAWS OF THE STATE OF MINNESOTA

SIGNATURE: TYPED OR PRINTED NAME: Christopher J. Dolejs
DATE 12-04-2017 LIC. NO. 24771

BOLTON & MENK
www.bolton-menk.com

REV.	BY	DATE
A	CJD	12/04/2017

CITY OF WINDOM, MINNESOTA
2017 WASTEWATER TREATMENT FACILITY IMPROVEMENTS
ELECTRICAL SCHEDULES

SHEET 7.22

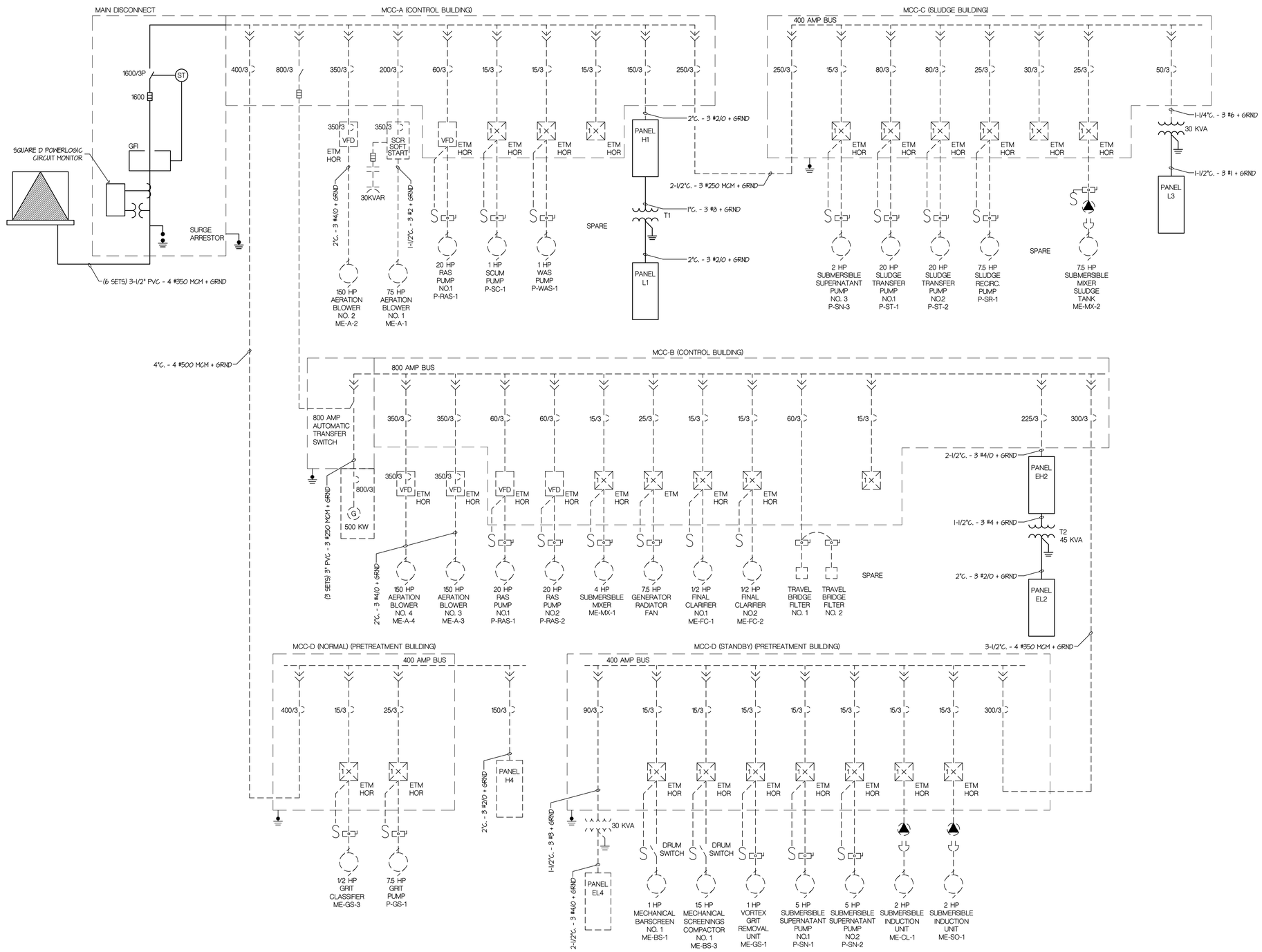

EXISTING ELECTRICAL RISER DIAGRAM

NO SCALE

SCALES SHOWN ON DRAWINGS ARE FOR 24"x36" SIZE SHEETS ONLY. DRAWINGS PLOTTED ON ANY OTHER SIZE SHEETS NEED TO HAVE SCALES ADJUSTED ACCORDINGLY

© Bolton & Menk, Inc. 2017, All Rights Reserved

Dolejs Associates, Inc. Consulting Engineers
1624 N. Riverfront Dr. Mankato, Minnesota 507-625-7869
17792 Idawood Path Lakeville, Minnesota 952-435-6790

I HEREBY CERTIFY THAT THIS PLAN, SPECIFICATION OR REPORT WAS PREPARED BY ME OR UNDER MY DIRECT SUPERVISION, AND THAT I AM A DULY LICENSED PROFESSIONAL ENGINEER UNDER THE LAWS OF THE STATE OF MINNESOTA

SIGNATURE: Christopher J. Dolejs TYPED OR PRINTED NAME: Christopher J. Dolejs
DATE 12-04-2017 LIC. NO. 24771

BOLTON & MENK
www.bolton-menk.com

REV.	BY	DATE
A	CJD	12/04/2017

CITY OF WINDOM, MINNESOTA
2017 WASTEWATER TREATMENT FACILITY IMPROVEMENTS
EXISTING ELECTRICAL RISER DIAGRAM

SHEET 7.23

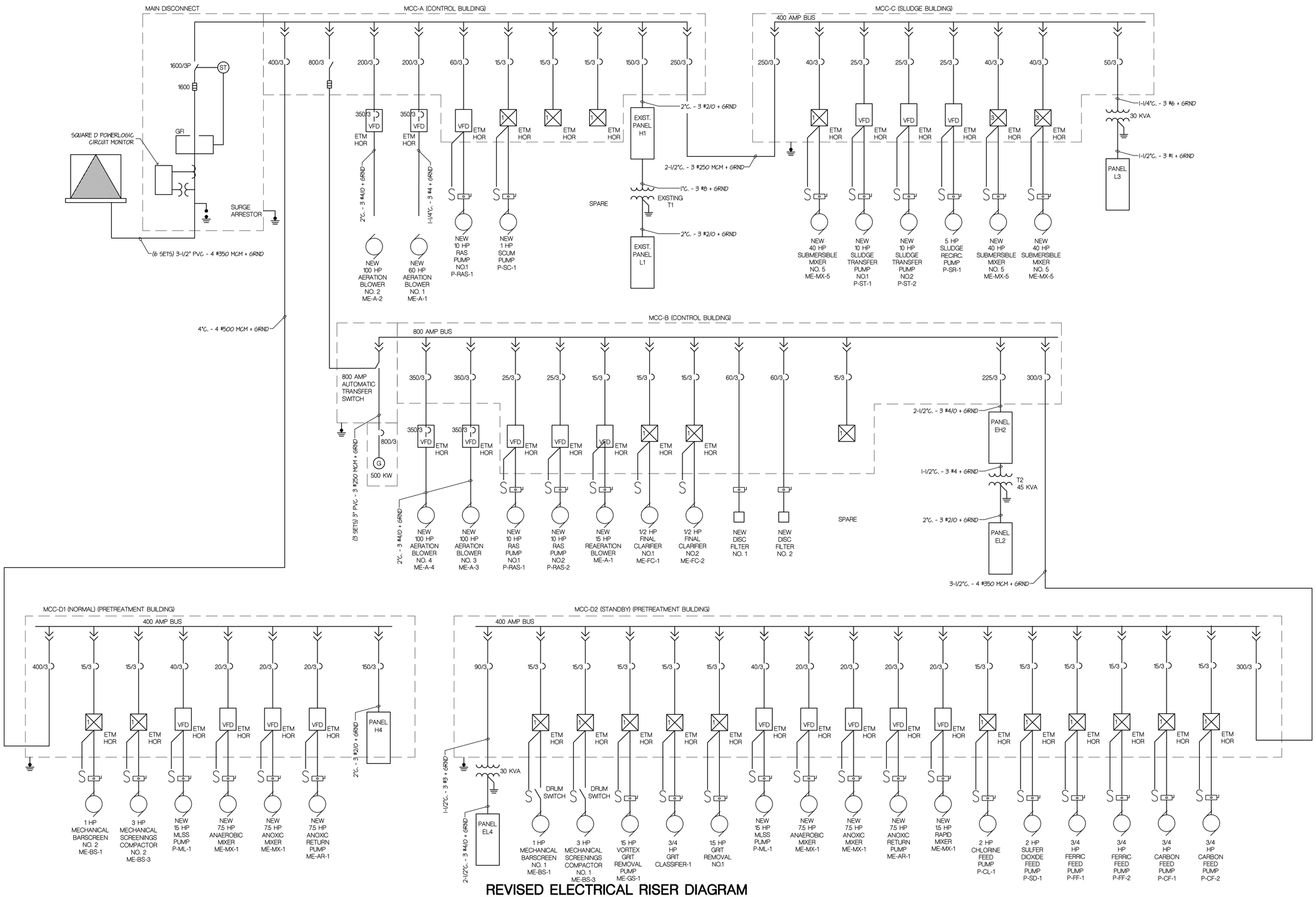

REVISED ELECTRICAL RISER DIAGRAM

NO SCALE

SCALES SHOWN ON DRAWINGS ARE FOR 24"x36" SIZE SHEETS ONLY. DRAWINGS PLOTTED ON ANY OTHER SIZE SHEETS NEED TO HAVE SCALES ADJUSTED ACCORDINGLY

© Bolton & Menk, Inc. 2017, All Rights Reserved

Dolejs Associates, Inc. Consulting Engineers
1624 N. Riverfront Dr. Mankato, Minnesota 507-625-7869
17792 Idawood Path Lakeville, Minnesota 952-435-6790

I HEREBY CERTIFY THAT THIS PLAN, SPECIFICATION OR REPORT WAS PREPARED BY ME OR UNDER MY DIRECT SUPERVISION, AND THAT I AM A DULY LICENSED PROFESSIONAL ENGINEER UNDER THE LAWS OF THE STATE OF MINNESOTA

SIGNATURE: Christopher J. Dolejs TYPED OR PRINTED NAME: Christopher J. Dolejs
DATE 12-04-2017 LIC. NO. 24771

BOLTON & MENK
www.bolton-menk.com

REV.	BY	DATE
A	CJD	12/04/2017

CITY OF WINDOM, MINNESOTA
2017 WASTEWATER TREATMENT FACILITY IMPROVEMENTS
REVISED ELECTRICAL RISER DIAGRAM

SHEET 7.24

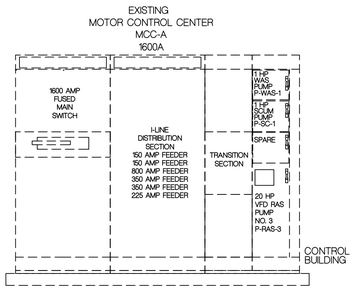

EXISTING MCC-A ELEVATION

NOT TO SCALE

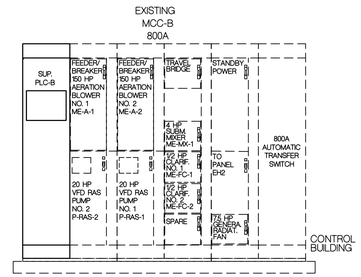

EXISTING MCC-B ELEVATION

NOT TO SCALE

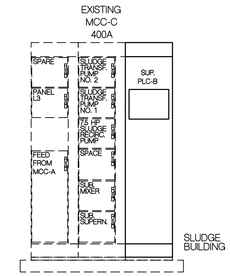

EXISTING MCC-C ELEVATION

NOT TO SCALE

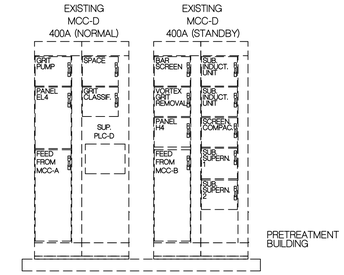

EXISTING MCC-D ELEVATION

NOT TO SCALE

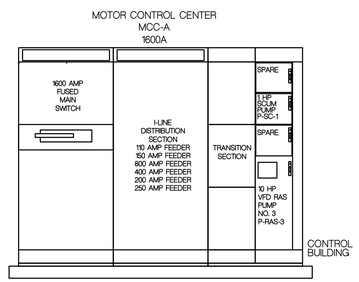

NEW MCC-A ELEVATION

NOT TO SCALE

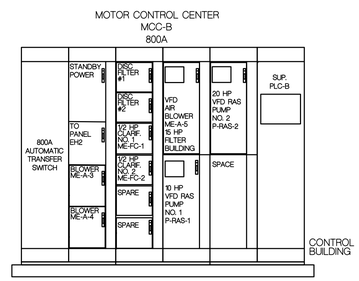

NEW MCC-B ELEVATION

NOT TO SCALE

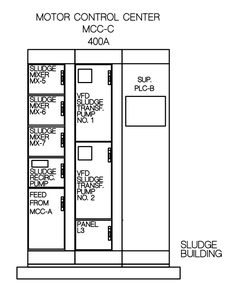

NEW MCC-C ELEVATION

NOT TO SCALE

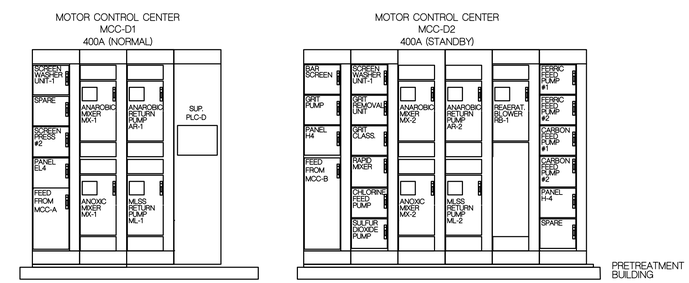

MCC-D1 AND MCC-D2 ELEVATION

NOT TO SCALE

SCALES SHOWN ON DRAWINGS ARE FOR 24"x36" SIZE SHEETS ONLY. DRAWINGS PLOTTED ON ANY OTHER SIZE SHEETS NEED TO HAVE SCALES ADJUSTED ACCORDINGLY

© Bolton & Menk, Inc. 2017, All Rights Reserved

Dolejs Associates, Inc.
Consulting Engineers
1624 N. Riverfront Dr. Mankato, Minnesota 507-625-7869
17792 Idawood Path Lakeville, Minnesota 952-435-6790

I HEREBY CERTIFY THAT THIS PLAN, SPECIFICATION OR REPORT WAS PREPARED BY ME OR UNDER MY DIRECT SUPERVISION, AND THAT I AM A DULY LICENSED PROFESSIONAL ENGINEER UNDER THE LAWS OF THE STATE OF MINNESOTA

SIGNATURE: TYPED OR PRINTED NAME: Christopher J. Dolejs

DATE 12-04-2017 LIC. NO. 24771

BOLTON & MENK

www.bolton-menk.com

REV.	BY	DATE
A	CJD	12/04/2017

CITY OF WINDOM, MINNESOTA

2017 WASTEWATER TREATMENT FACILITY IMPROVEMENTS

MOTOR CONTROL ELEVATIONS

SHEET 7.25

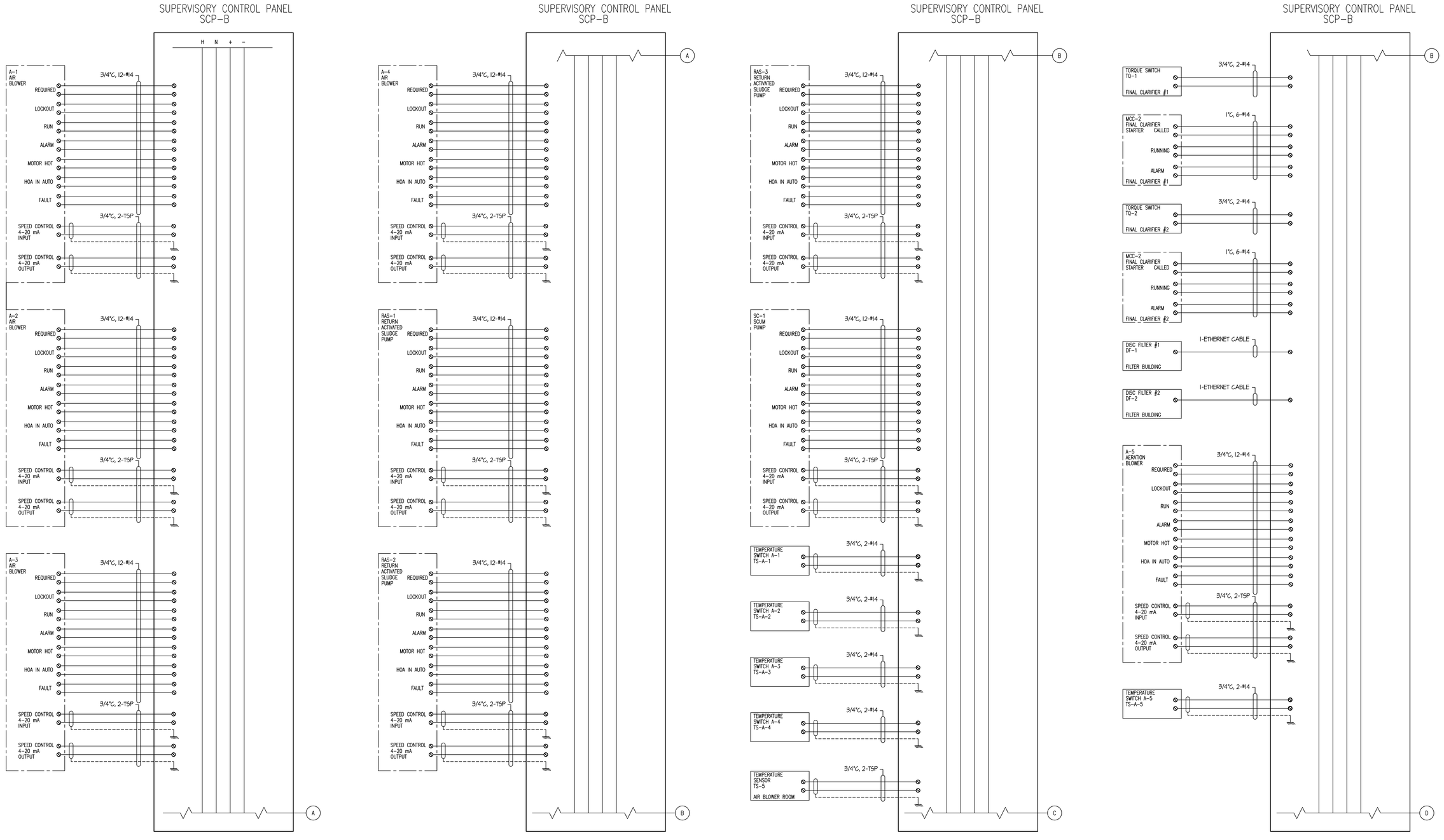

SUPERVISORY CONTROL SCP-3

NO SCALE

SCALES SHOWN ON DRAWINGS ARE FOR 24"x36" SIZE SHEETS ONLY. DRAWINGS PLOTTED ON ANY OTHER SIZE SHEETS NEED TO HAVE SCALES ADJUSTED ACCORDINGLY

© Bolton & Menk, Inc. 2017, All Rights Reserved

Dolejs Associates, Inc.
Consulting Engineers
1624 N. Riverfront Dr. Mankato, Minnesota 507-625-7869
17792 Idawood Path Lakeville, Minnesota 952-435-6790

I HEREBY CERTIFY THAT THIS PLAN, SPECIFICATION OR REPORT WAS PREPARED BY ME OR UNDER MY DIRECT SUPERVISION, AND THAT I AM A DULY LICENSED PROFESSIONAL ENGINEER UNDER THE LAWS OF THE STATE OF MINNESOTA

SIGNATURE: TYPED OR PRINTED NAME: Christopher J. Dolejs

DATE 12-04-2017 LIC. NO. 24771

BOLTON & MENK

www.bolton-menk.com

REV.	BY	DATE
A	CJD	12/04/2017

CITY OF WINDOM, MINNESOTA

2017 WASTEWATER TREATMENT FACILITY IMPROVEMENTS

SUPERVISORY CONTROL DIAGRAM SCP-B

SHEET 7.26

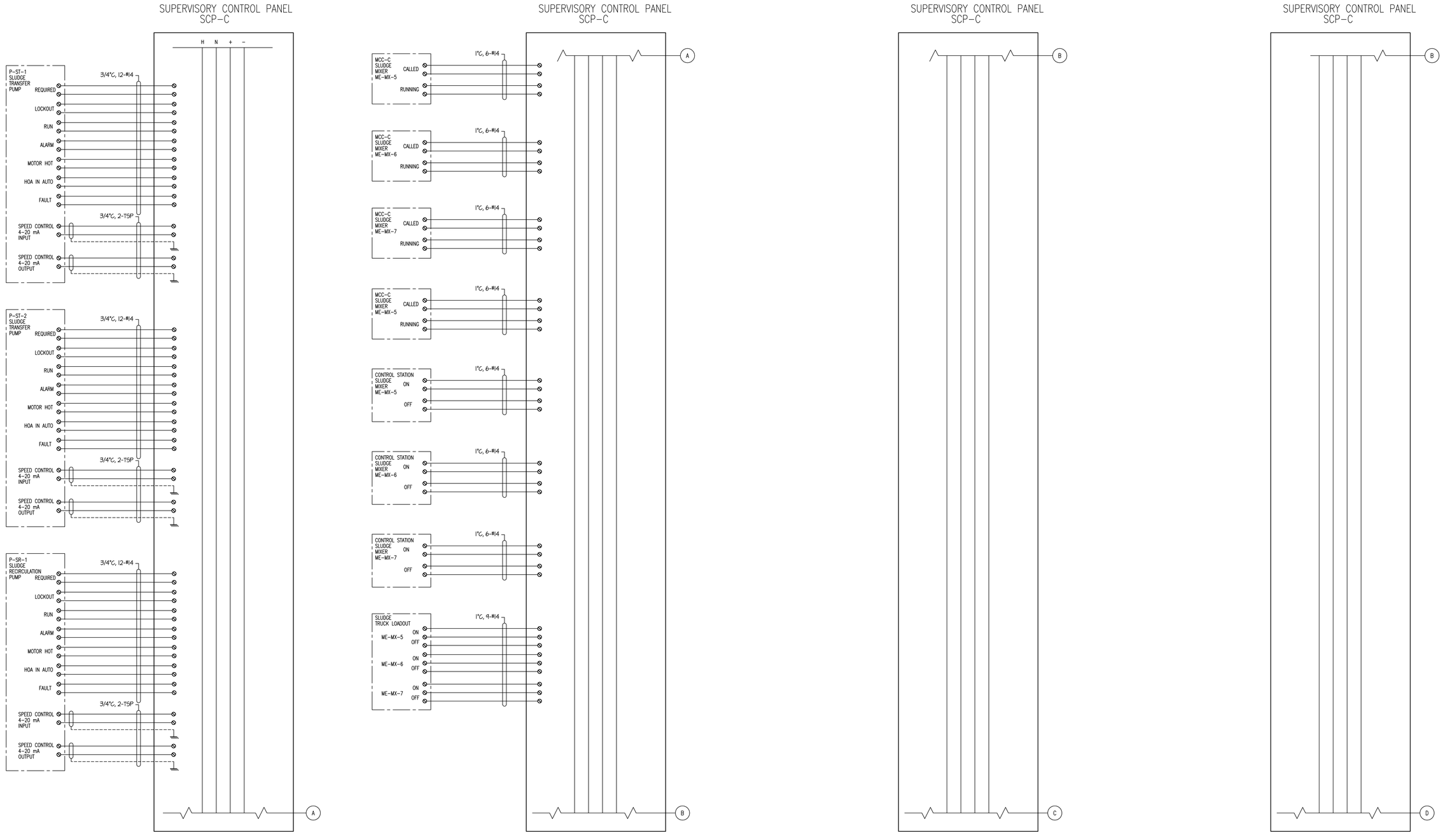

SUPERVISORY CONTROL SCP-C

NO SCALE

SCALES SHOWN ON DRAWINGS ARE FOR 24"x36" SIZE SHEETS ONLY. DRAWINGS PLOTTED ON ANY OTHER SIZE SHEETS NEED TO HAVE SCALES ADJUSTED ACCORDINGLY

© Bolton & Menk, Inc. 2017, All Rights Reserved

Dolejs Associates, Inc.
Consulting Engineers
1624 N. Riverfront Dr.
Mankato, Minnesota
507-625-7869
17792 Idawood Path
Lakeville, Minnesota
952-435-6790

I HEREBY CERTIFY THAT THIS PLAN, SPECIFICATION OR REPORT WAS PREPARED BY ME OR UNDER MY DIRECT SUPERVISION, AND THAT I AM A DULY LICENSED PROFESSIONAL ENGINEER UNDER THE LAWS OF THE STATE OF MINNESOTA

SIGNATURE: Christopher J. Dolejs TYPED OR PRINTED NAME: Christopher J. Dolejs

DATE 12-04-2017 LIC. NO. 24771

BOLTON & MENK

www.bolton-menk.com

REV.	BY	DATE
A	CJD	12/04/2017

CITY OF WINDOM, MINNESOTA

2017 WASTEWATER TREATMENT FACILITY IMPROVEMENTS

SUPERVISORY CONTROL DIAGRAM SCP-C

SHEET 7.27

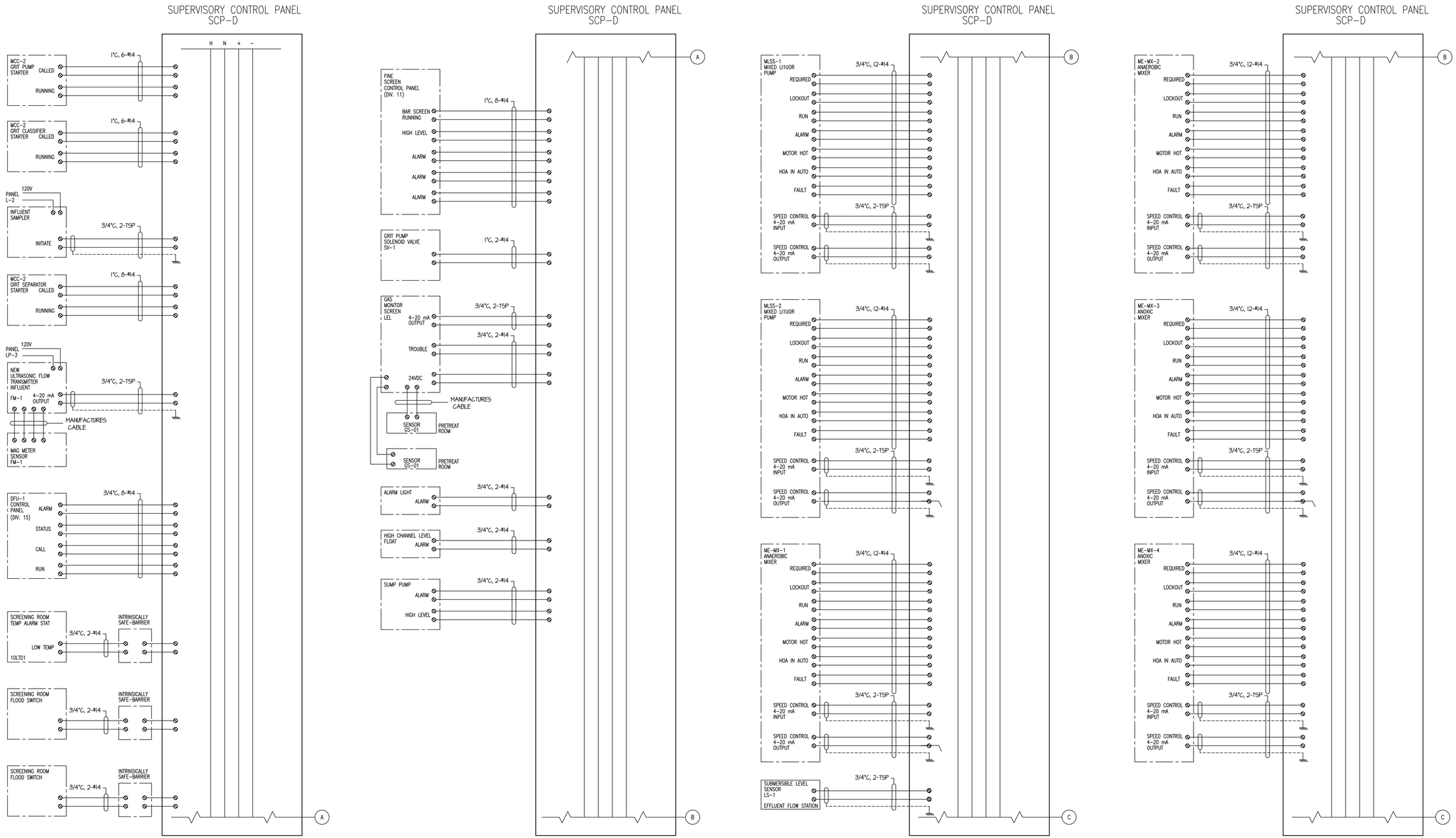

SUPERVISORY CONTROL SCP-D

NO SCALE

SCALES SHOWN ON DRAWINGS ARE FOR 24"x36" SIZE SHEETS ONLY. DRAWINGS PLOTTED ON ANY OTHER SIZE SHEETS NEED TO HAVE SCALES ADJUSTED ACCORDINGLY

© Bolton & Menk, Inc. 2017, All Rights Reserved

Dolejs Associates, Inc.
Consulting Engineers
1624 N. Riverfront Dr.
Mankato, Minnesota
507-625-7869
17792 Idawood Path
Lakeville, Minnesota
952-435-6790

I HEREBY CERTIFY THAT THIS PLAN, SPECIFICATION OR REPORT WAS PREPARED BY ME OR UNDER MY DIRECT SUPERVISION, AND THAT I AM A DULY LICENSED PROFESSIONAL ENGINEER UNDER THE LAWS OF THE STATE OF MINNESOTA

SIGNATURE: TYPED OR PRINTED NAME: Christopher J. Dolejs

DATE 12-04-2017 LIC. NO. 24771

BOLTON & MENK

www.bolton-menk.com

REV.	BY	DATE
A	CJD	12/04/2017

CITY OF WINDOM, MINNESOTA

2017 WASTEWATER TREATMENT FACILITY IMPROVEMENTS

SUPERVISORY CONTROL DIAGRAM SCP-D

SHEET 7.28

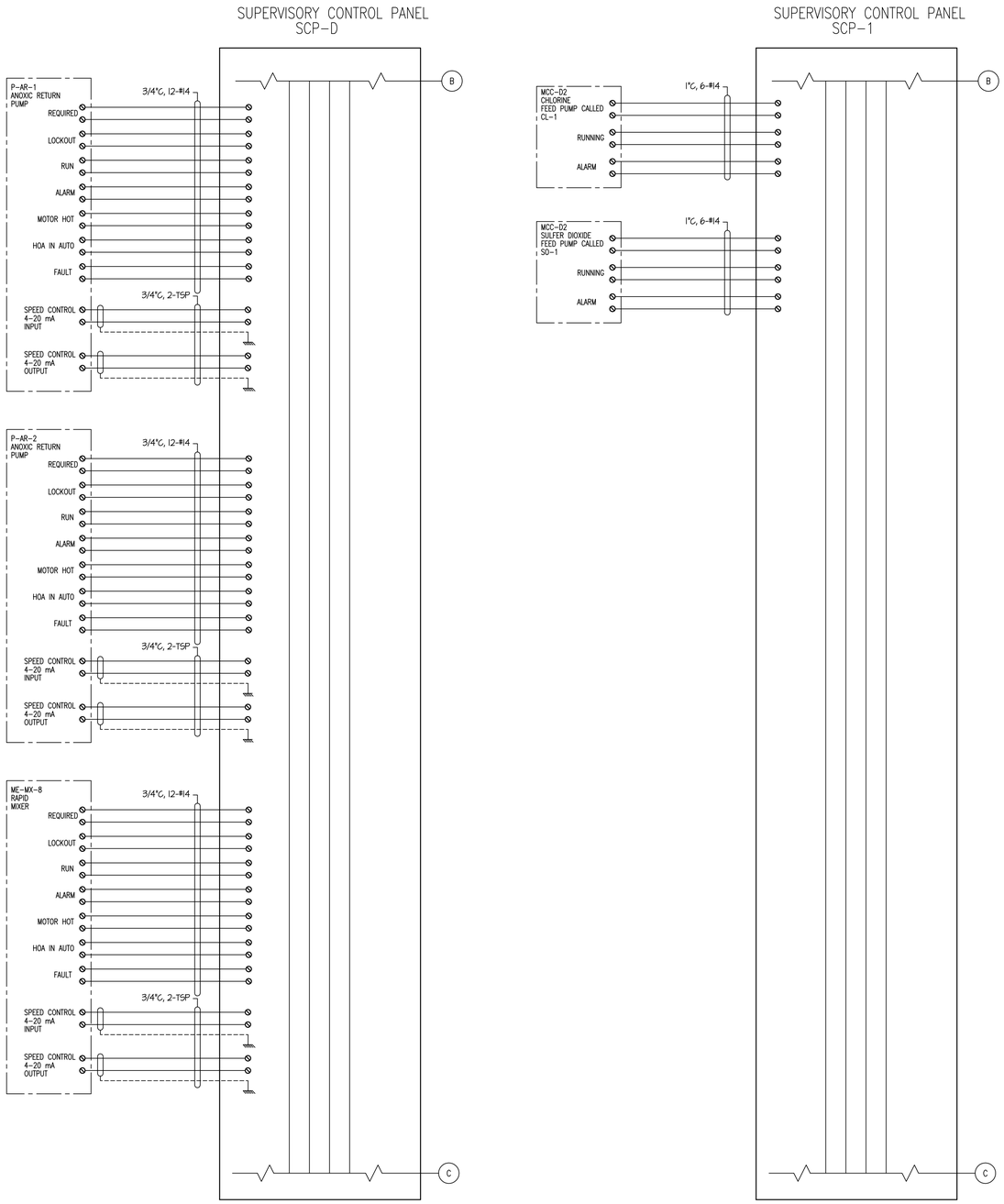

SUPERVISORY CONTROL SCP-D

NO SCALE

SCALES SHOWN ON DRAWINGS ARE FOR 24"x36" SIZE SHEETS ONLY. DRAWINGS PLOTTED ON ANY OTHER SIZE SHEETS NEED TO HAVE SCALES ADJUSTED ACCORDINGLY

© Bolton & Menk, Inc. 2017, All Rights Reserved

Dolejs Associates, Inc.
Consulting Engineers
1624 N. Riverfront Dr.
Mankato, Minnesota
507-625-7869
17792 Idawood Path
Lakeville, Minnesota
952-435-6790

I HEREBY CERTIFY THAT THIS PLAN, SPECIFICATION OR REPORT WAS PREPARED BY ME OR UNDER MY DIRECT SUPERVISION, AND THAT I AM A DULY LICENSED PROFESSIONAL ENGINEER UNDER THE LAWS OF THE STATE OF MINNESOTA

SIGNATURE: TYPED OR PRINTED NAME: Christopher J. Dolejs

DATE 12-04-2017 LIC. NO. 24771

BOLTON & MENK

www.bolton-menk.com

REV.	BY	DATE
A	CJD	12/04/2017

CITY OF WINDOM, MINNESOTA

2017 WASTEWATER TREATMENT FACILITY IMPROVEMENTS

SUPERVISORY CONTROL DIAGRAM SCP-D

SHEET 7.29